LYRA-170

FREESTANDING BATHTUB

SKU: LYRA - 170

Colors/Finishes: White

Nominal Dimension: 67"* 31 1/2"*23 5/8"

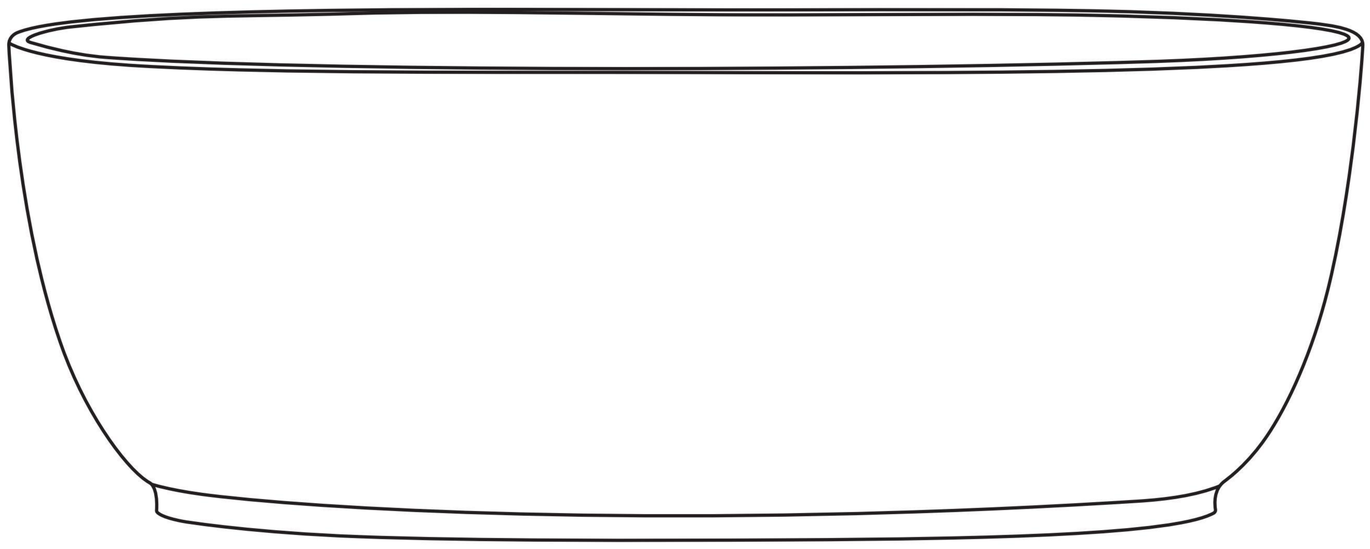

FEATURES:

- LYRA 67"FREESTANDING BATHTUB
- WITH POP-UP DRAINER
- GROOVE OVERFLOW
- 100% PURE VIRGIN ACRYLIC
- ERGONOMIC AND STYLISH DESIGN

PRODUCT DIAGRAMS:

Front

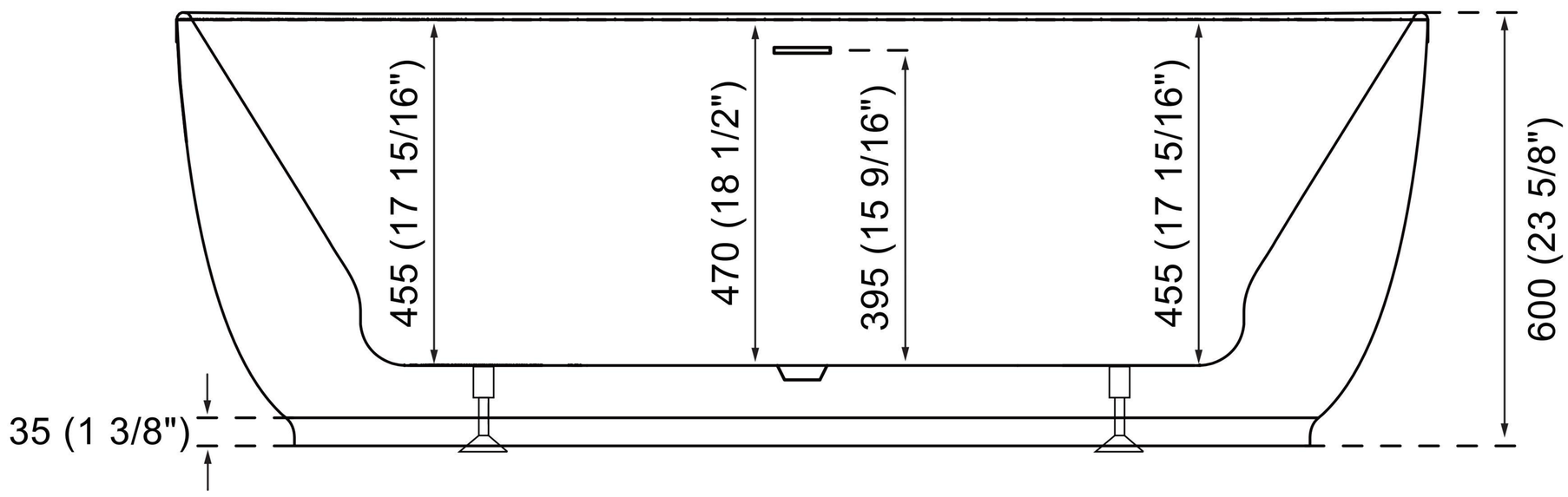

Top

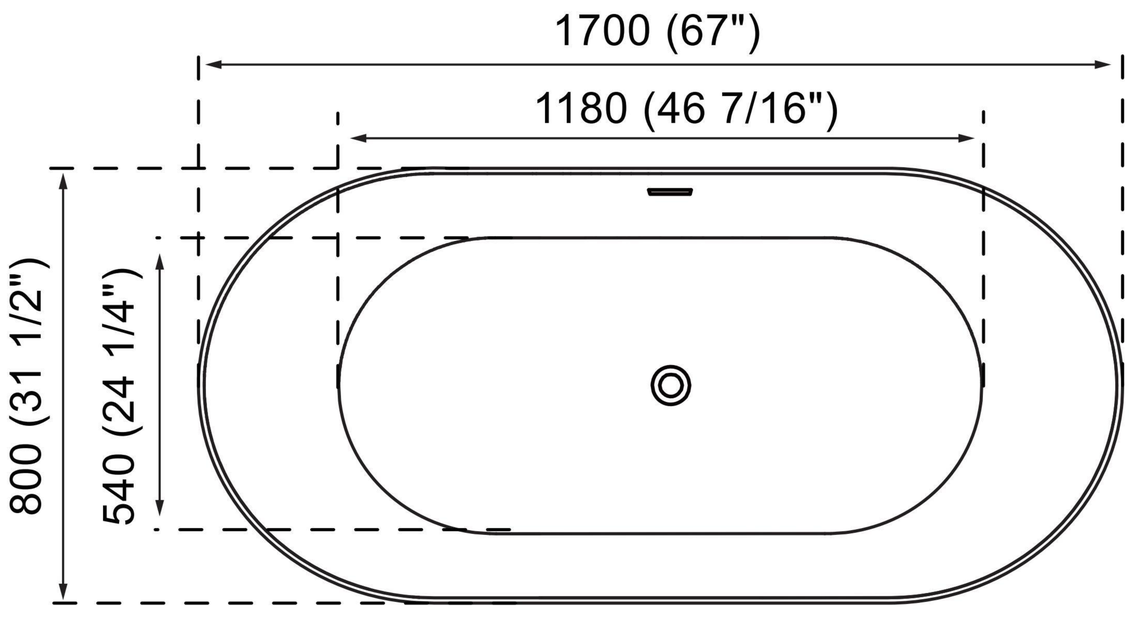

Side

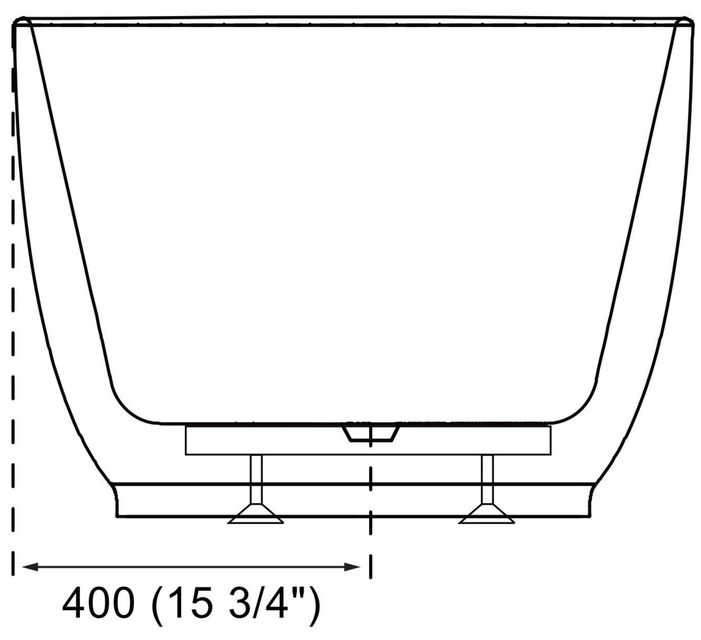

All dimensions and specifications are nominal and may vary.Use actual products for accuracy in critical situations.

BATHTUB INSTALLATION

BEFORE YOU BEGIN

We recommend consulting a professional if you are unfamiliar with installing plumbing fixtures. We accept no liability for any damage to the faucet, plumbing, wall, or for personal injury during installation.

Observe all local plumbing and building codes.

SUGGESTED TOOLS AND MATERIALS:

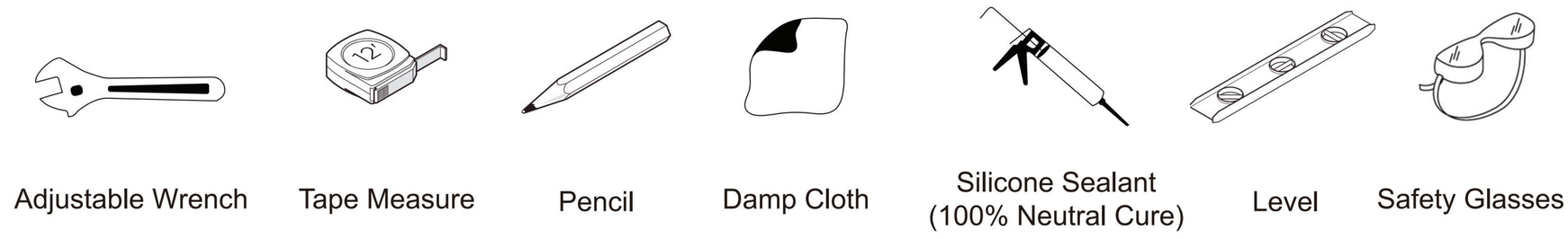

PART LIST:

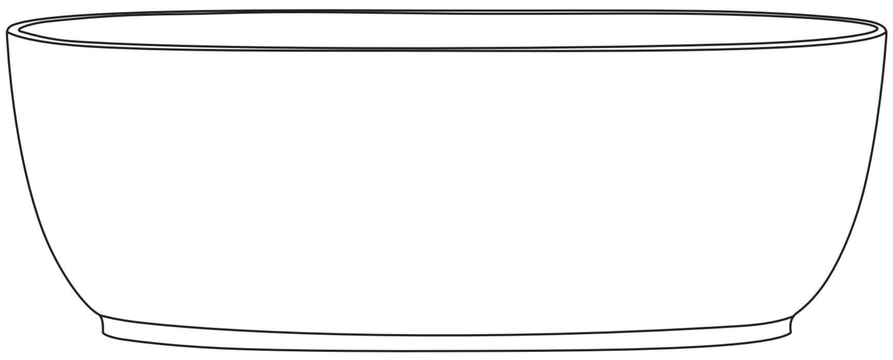

Freestanding Bathtub x 1

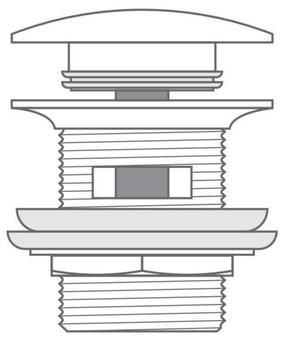

Bathtub Drain with Overflow x 1

⚠ **NOTE**: Determine overall bathtub dimensions before installation.
Requires two(2) person in installation.

Accessories and parts may vary from the picture above.Depends on the product model and size.

⚠ This products must be installed by a fully insured and licensed plumber only.

PLANNING ASSEMBLY

Check the bathtub for damage before installation. If any part of the cabinet is missing or damaged contact the Customer Service Team at 206.809.0093.

Ensure that the bathtub location is accessible to water supply and drain lines. Ensure that your bathroom floor is adequately supported, and the finished floor is level.

Note: Bathtub size, style and shape may vary from the picture above.Instructiona purpose only

INSTALLATION WITH UNDERFLOOR ACCESS

1. Set the tub in the desired location and mark the drain hole location on the floor. Then, move the tub away from the desired installation location so that the plumbing can be installed.

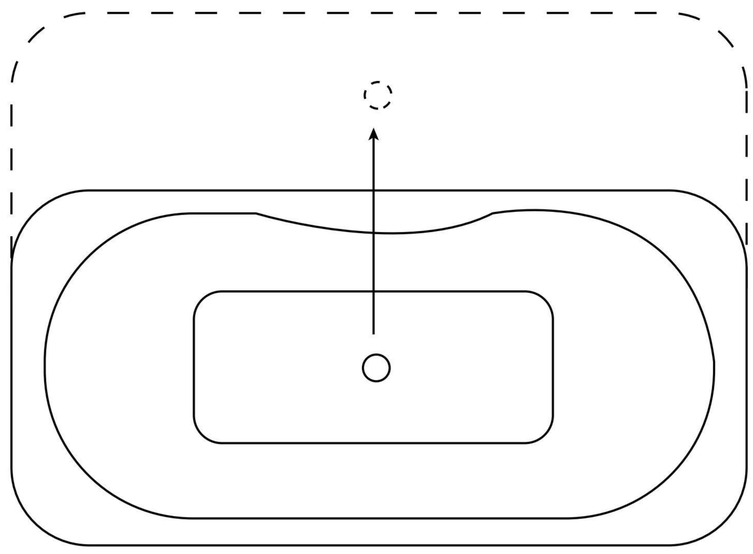

2. Turn bathtub upside down and rest it on a moving blanket, cardboard, or other soft surface to prevent scratching the rim. Use caution when turning the bathtub upside down, as the product may be heavy and may require assistance to rotate.

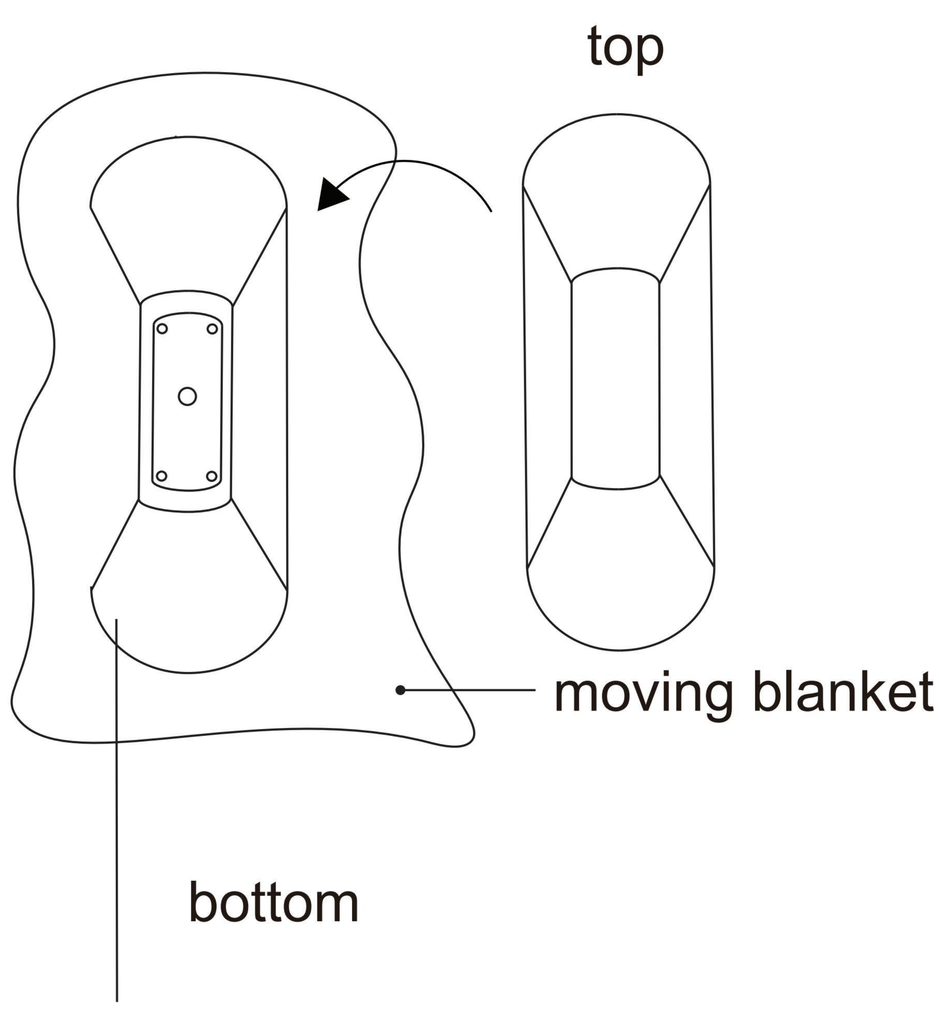

3. Place a level across the bottom of the tub to represent floor level. Raise adjustable leveling supports to touch level. Then, raise the support an additional 1/8" to ensure the bathtub is supported by the support feet and not by the tub walls.

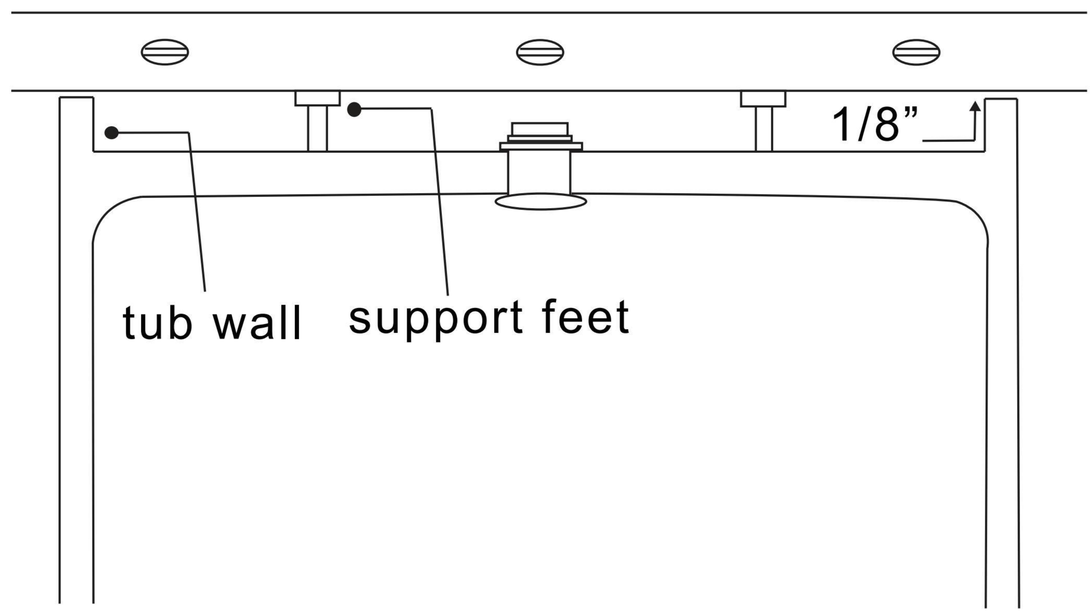

4. Your tub may come with a drain basket and threaded tail piece installed.

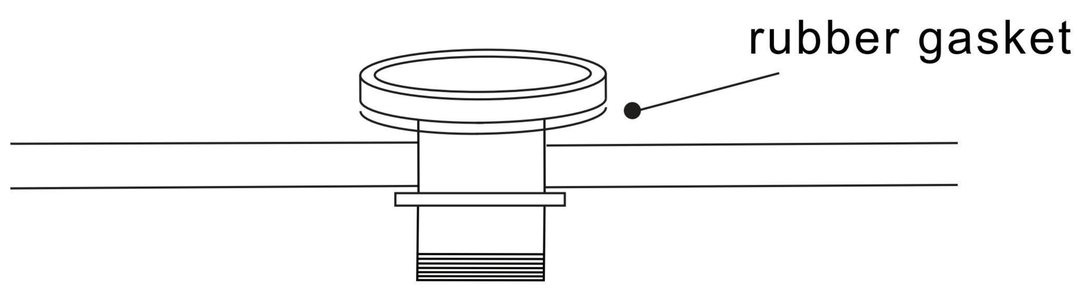

Note: Bathtub size, style and shape may vary from the picture above.Instructiona purpose only

INSTALLATION WITH UNDERFLOOR ACCESS

5. Your tub may come with a drain cover and pop up mechanism already installed. If not, to install the drain pop up mechanism and drain cover, simply screw the pop up mechanism into drain cap. Then, install the assembly into drain basket.

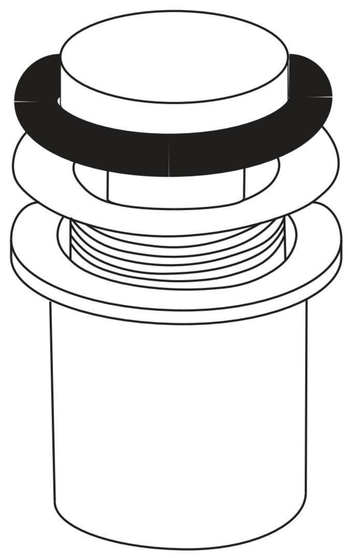

6. Make connection under floor from tub drain to p-trap.

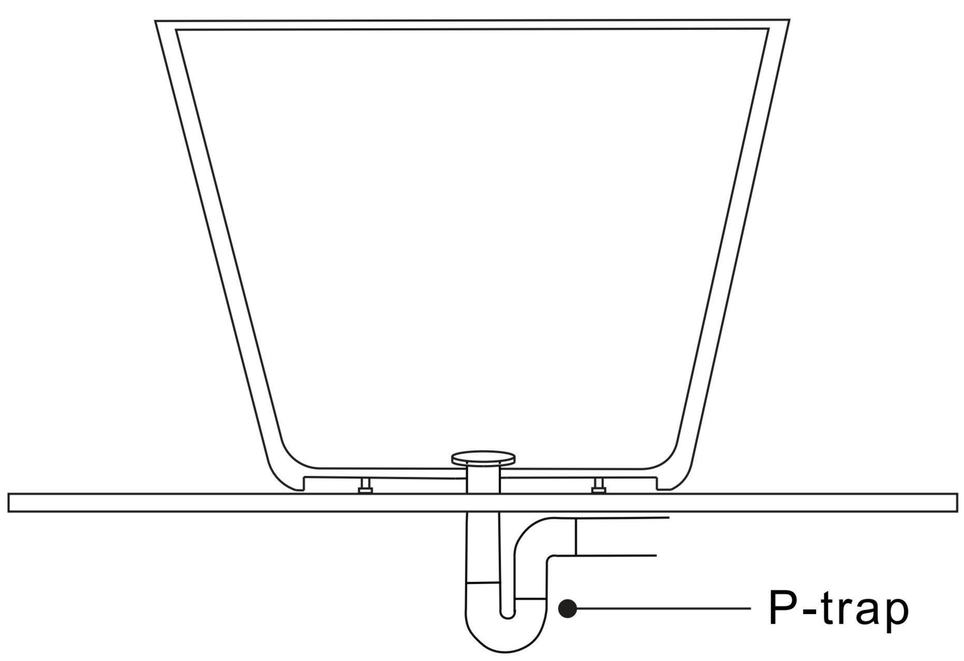

7. Fill the tub with water to check for any leaks from the connections. Verify that the drain is working properly.

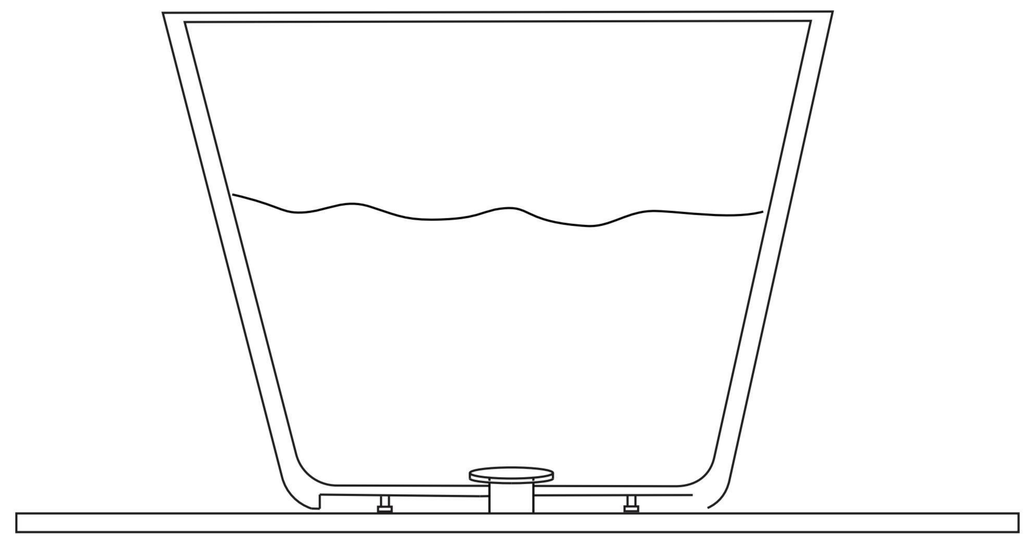

8. Finish your installation by running a bead of neutral cure silicone sealant around the base of the tub where it meets the floor. Wipe away any excess sealant with a damp cloth.

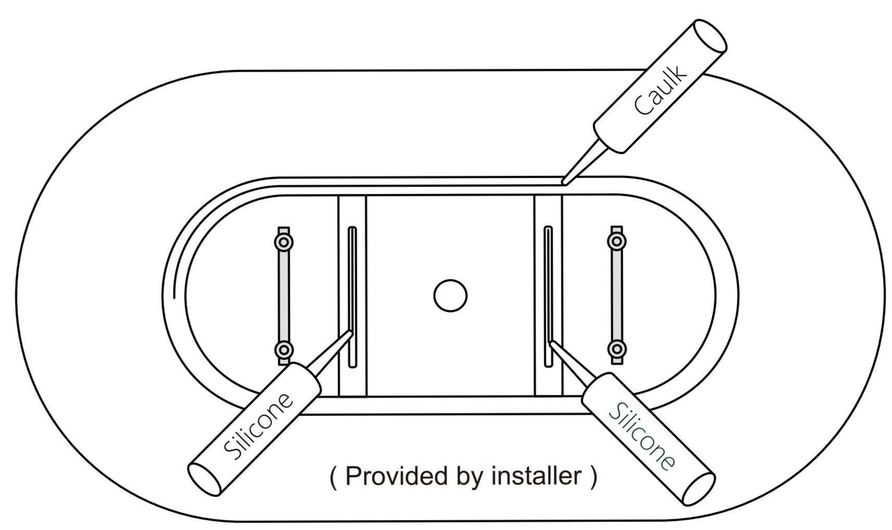

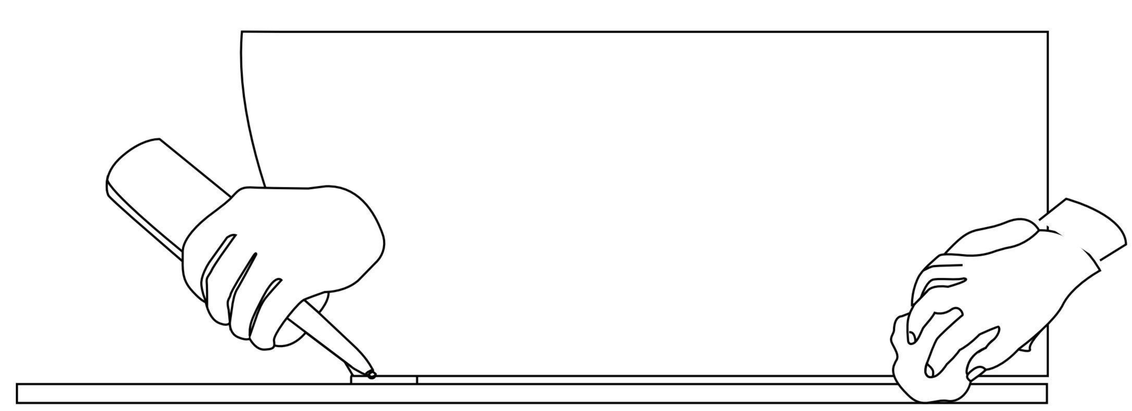

Note: Bathtub size, style and shape may vary from the picture above.Instructiona purpose only

INSTALLATION WITHOUT UNDERFLOOR ACCESS / SLAB FLOOR INSTALLATION

1. Set the tub in the desired location and mark the drain hole location on the floor. Then, move the tub away from the desired installation location so that the plumbing can be installed.

NOTE: Slab floor installations can vary

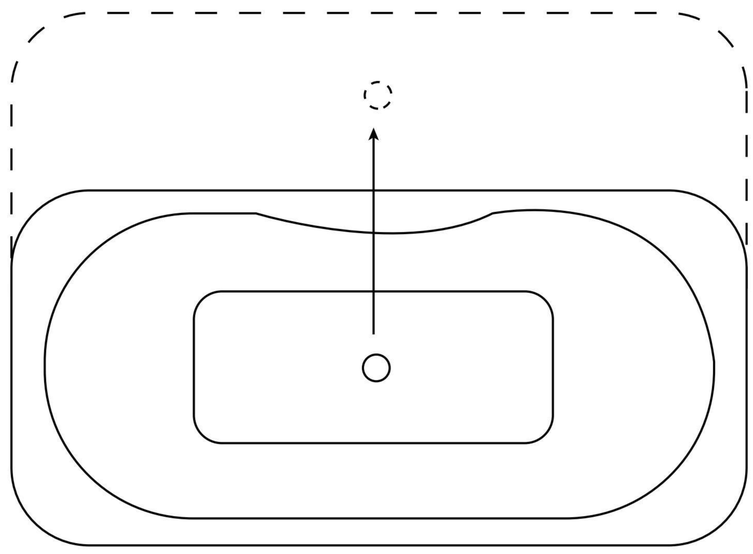

2. Turn bathtub upside down and rest it on a moving blanket, cardboard, or other soft surface to prevent scratching the rim. Use caution when turning the bathtub upside down, as the product may be heavy and may require assistance to rotate.

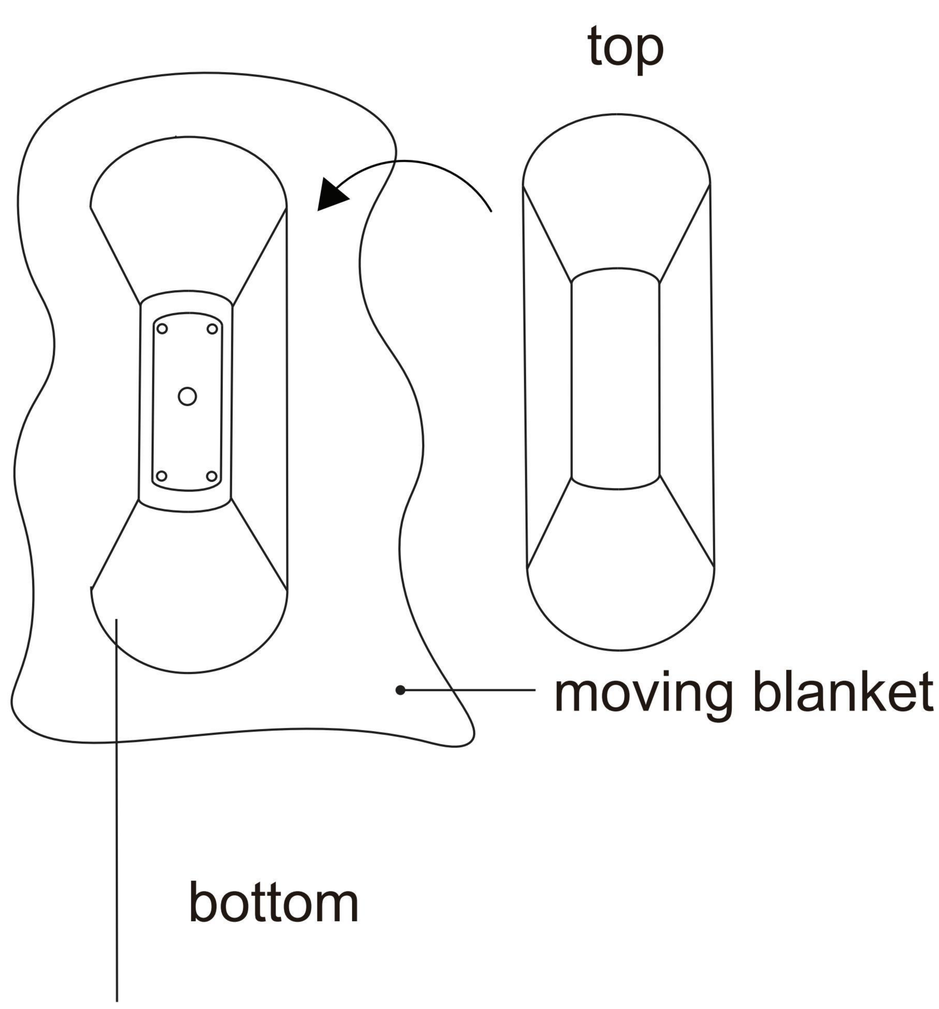

3. Place a level across the bottom of the tub to represent floor level. Raise adjustable leveling supports to touch level. Then, raise the support an additional 1/8" to ensure the bathtub is supported by the support feet and not by the tub walls.

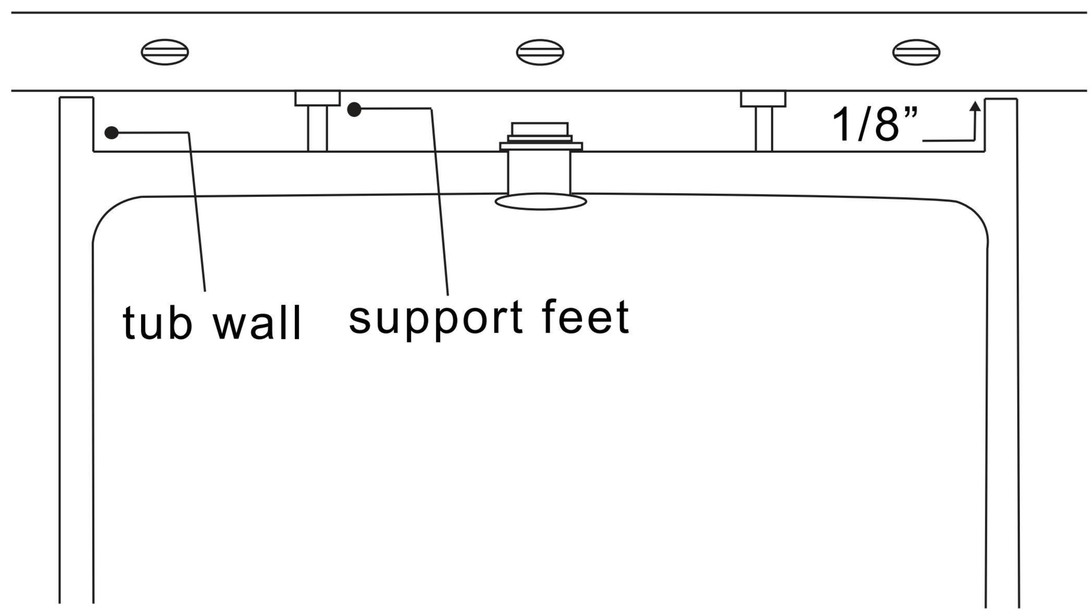

4. Your tub may come with a drain basket and threaded tail piece installed.

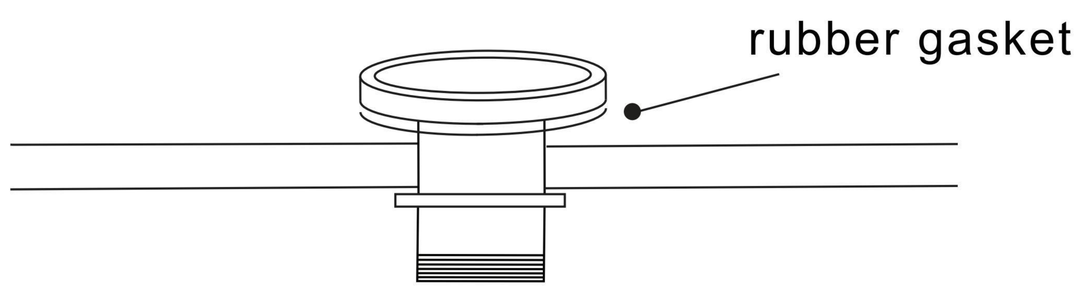

Note: Bathtub size, style and shape may vary from the picture above.Instructiona purpose only

INSTALLATION WITHOUT UNDERFLOOR ACCESS / SLAB FLOOR INSTALLATION

5. Your tub may come with a drain cover and pop up mechanism already installed. If not, to install the drain pop up mechanism and drain cover, simply screw the pop up mechanism into drain cap. Then, install the assembly into drain basket.

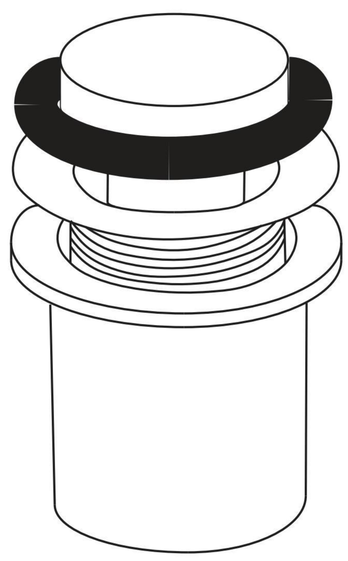

6. Your tub may come with a drain cover and pop up mechanism already installed. If not, to install the drain pop up mechanism and drain cover, simply screw the pop up mechanism into drain cap. Then, install the assembly into drain basket.

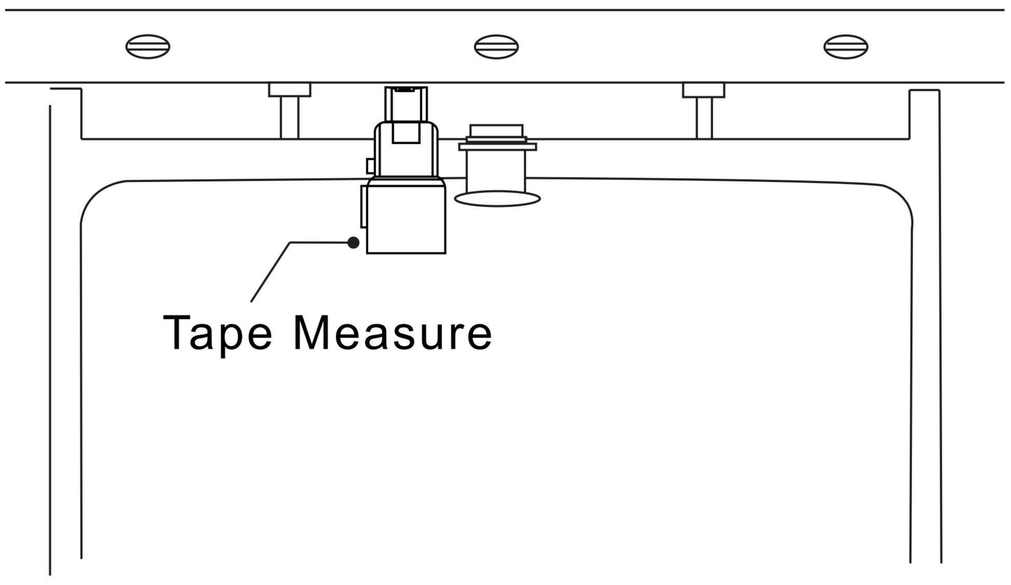

7. You may need to trim 1½" PVC drain pipe extending from the floor to the appropriate length.

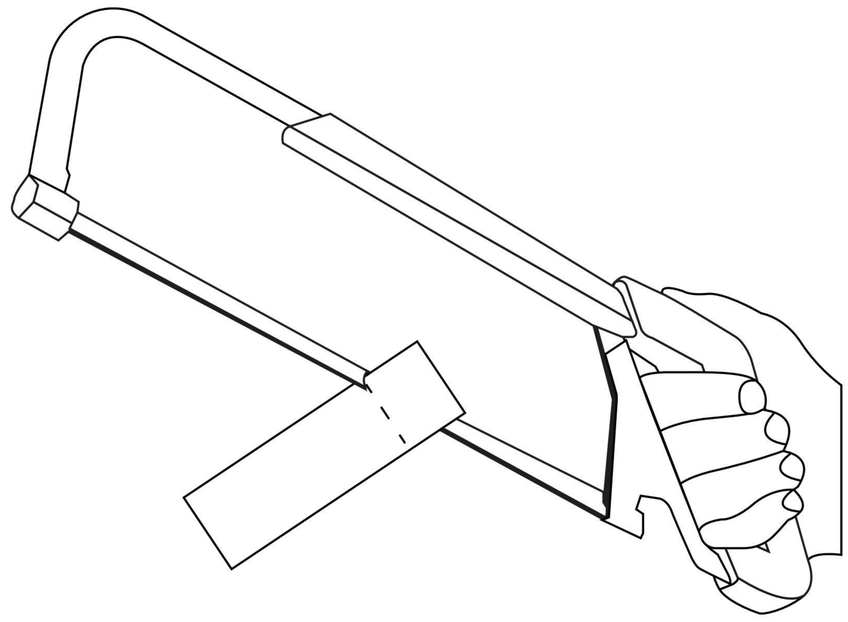

8. Turn the tub to upright position. Prepare the drain to be connected to the male PVC pipe rough-in above floor level.

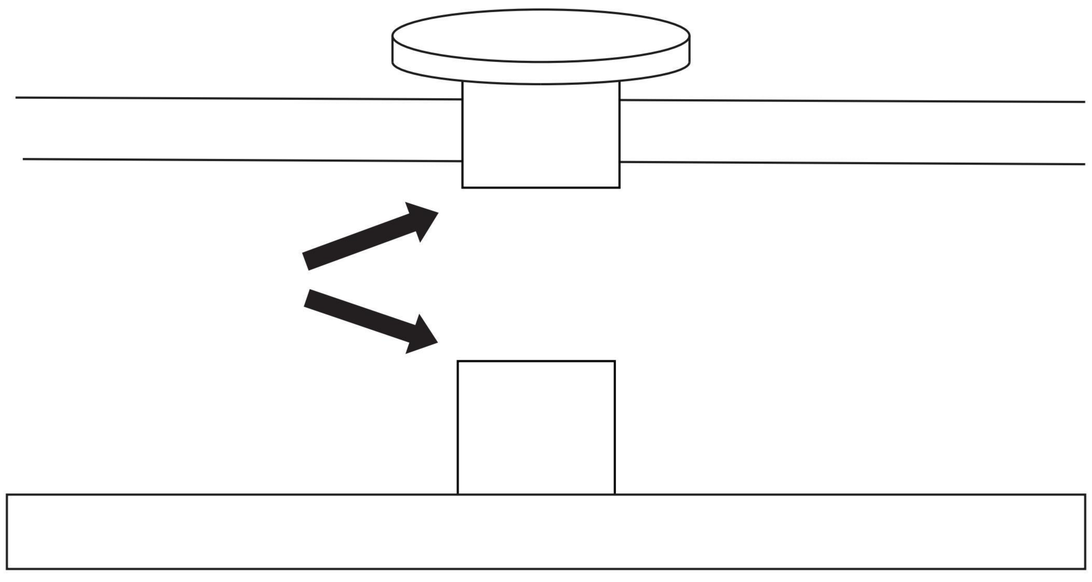

Note: Bathtub size, style and shape may vary from the picture above.Instructiona purpose only

INSTALLATION WITHOUT UNDERFLOOR ACCESS / SLAB FLOOR INSTALLATION

9. Center tub directly over PVC rough-in, adhere tub onto PVC pipe.

NOTE: Unscrew the pop up mechanism and drain cover to get a better view of the male PVC rough-in.

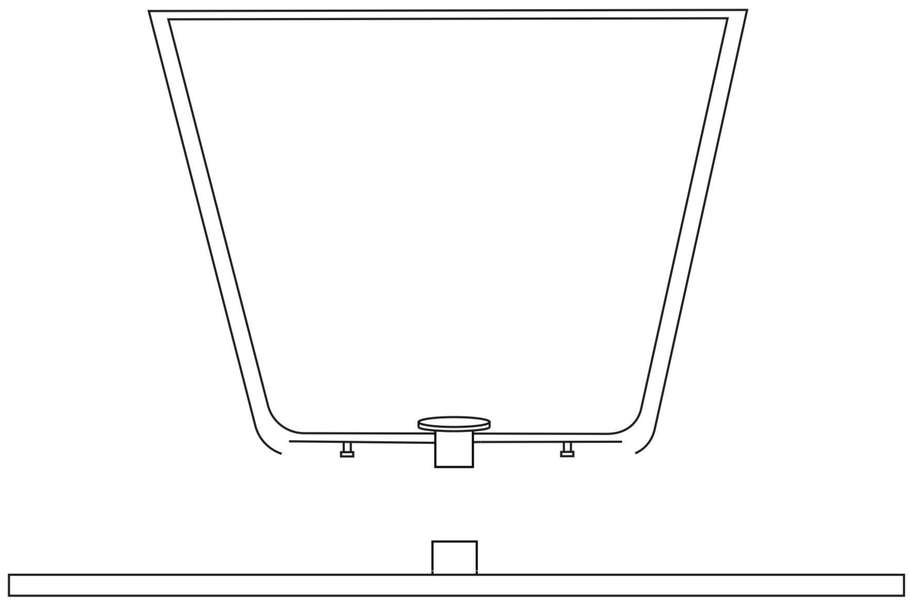

10. Fill the tub with water to check for any leaks from the connections. Verify that the drain is working properly

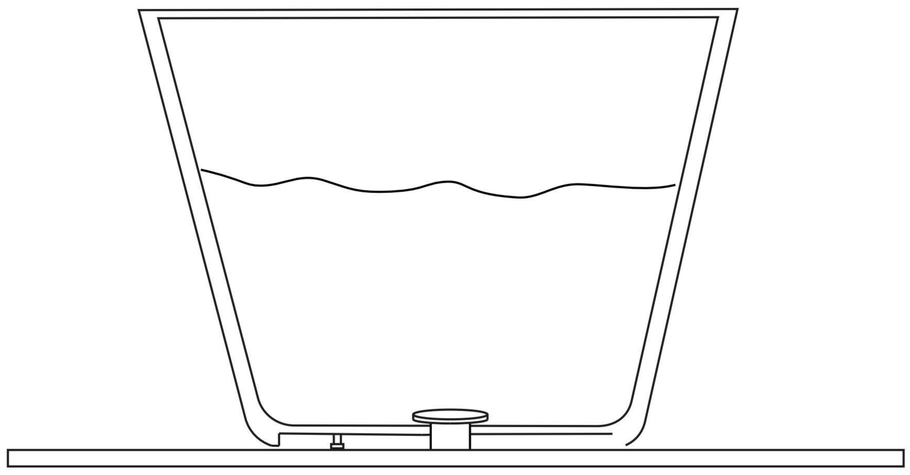

11. Finish your installation by running a bead of neutral cure silicone sealant around the base of the tub where it meets the floor. Wipe away any excess sealant with a damp cloth.

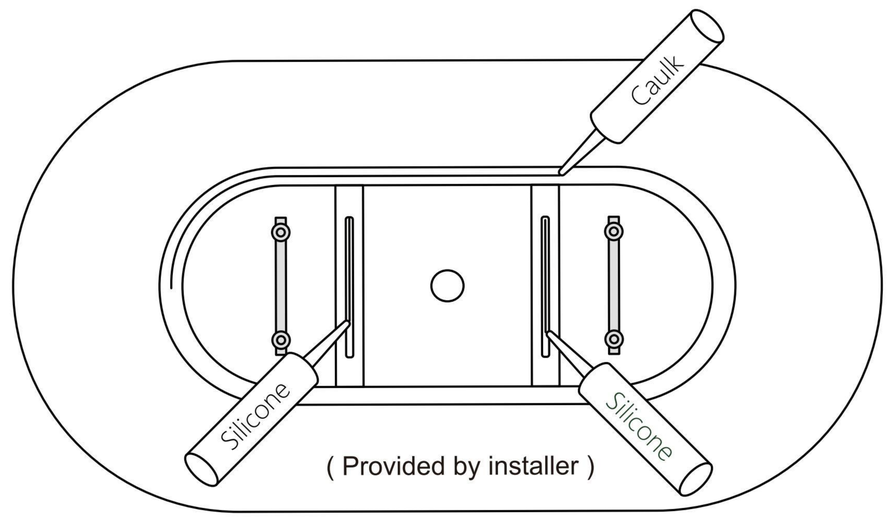

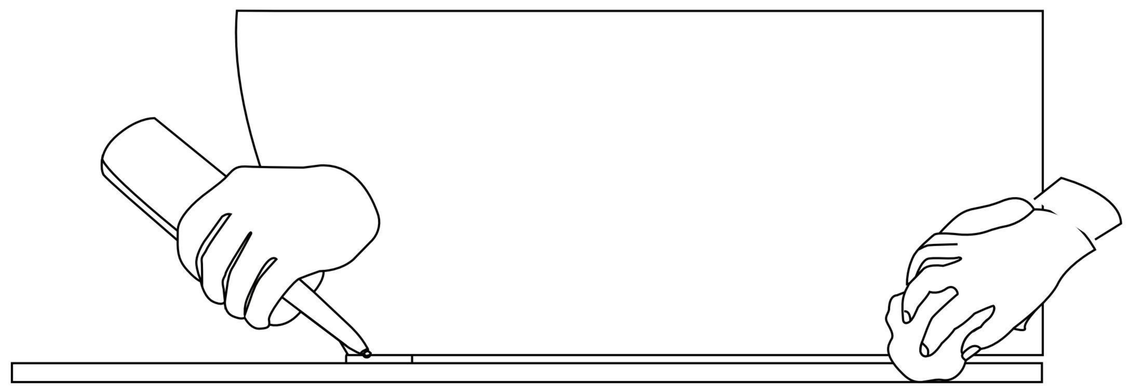

Note: Bathtub size, style and shape may vary from the picture above.Instructiona purpose only

MAINTAIN YOUR BATHTUB

CLEANING

Clean your bathtub with a mild soap like dishwashing liquid mixed with warm water. Avoid abrasive cleaning pads; opt for a soft sponge or microfiber cloth instead. Use vinegar to tackle hard water stains and mildew. Rinse with warm water and dry with a soft cloth. For a glossy finish, buff your tub every three months using white polishing compound. Avoid harsh tools like metal scrapers or wire brushes.

REMOVE SCRATCHES

1. Dampen a sponge and cleanse the surface with warm water and dishwashing liquid, then rinse thoroughly.
2. Avoid abrasive cleaners or chemicals; ensure your chosen products are safe for acrylic tubs.
3. Gently sand the scratched area using 800 and 1200 grit sandpaper in circular motions.
4. Cleanse the sanded area with a damp sponge and rinse well.
5. Apply an acrylic polishing compound mixed with water using a soft cloth, buffing in circular motions for a smooth finish.
6. Wipe away any excess residue and rinse the tub with warm water, then dry with a soft cloth.

MAINTENANCE

We advise against using bath oils and bath salts as they pose challenges in cleaning the systems. Doing so will also nullify the consumer's warranty.

Maintaining your Whirlpool Tub or Air Bath:

To ensure your whirlpool tub or air bath remains in optimal condition, it's crucial to regularly flush out and clean its jets.

For an air bath, the process is straightforward. Simply activate the jets when the bath is empty, or utilize the bath's built-in drying cycle. This quick step effectively dries and flushes out the tub's jets within minutes.

However, cleaning a whirlpool tub requires a bit more effort:

1. Begin by filling the tub until the water level is a few inches above the jets.

2. Add a couple of cups of vinegar to the water or use a recommended cleaning product such as bleach or dishwashing detergent (refer to the manufacturer's instructions to ensure compatibility).

3. Turn off the air induction valves and switch on the jets. Allow them to run for approximately 15 minutes.

4. Drain the tub and repeat the process if necessary.

While cleaning the jets of a whirlpool tub may seem like a chore, it's essential for preventing the buildup of debris and mold, ultimately preserving the relaxation experience of your baths.

Keep in mind that if you frequently use your jetted tub (several times per week), you'll need to flush out its jets more regularly to maintain optimal performance.

Note: Bathtub size, style and shape may vary from the picture above.Instructiona purpose only

WARNING!

IMPORTANT SAFETY INSTRUCTIONS:

When using this product, it is essential to follow basic precautions to ensure safety. Please read and adhere to all instructions regarding the risk of fire, electric shock, or injury.

⚠ Risk of personal injury: Do not allow children to use this unit without adult supervision.

⚠ Risk of personal injury: Do not operate this unit without the guard over the suction fitting.

⚠ Risk of electric shock: Keep electrical appliances (such as hair dryers, telephones, radios, etc.) at least 60 inches (1524mm) away from this unit.

⚠ Risk of hyperthermia and possible drowning: Individuals using medications or with adverse medical histories should consult a physician before using this product.

⚠ Risk of personal injury: Do not overfill the unit before entering. Entering the tub when filled more than 2/3 can lead to overflow and slippery conditions. Use caution when entering and exiting.

⚠ No food or alcoholic beverages: Refrain from consuming food or alcoholic beverages in the bathtub. It is not advisable to use the bathtub immediately after meals or consume alcohol before or during bathing, as it can cause drowsiness or hyperthermia, potentially leading to loss of consciousness or drowning.

⚠ Pregnancy: Consult your physician before using the bathtub if you are pregnant or suspect you may be pregnant.

⚠ Never insert any object into any opening of the unit. Use the unit only for its intended purpose as described in the manual. Do not use any attachments not recommended by Signature Hardware. This equipment is intended for indoor use only.

Return and Exchange Policy:

We offer a comprehensive 5-year warranty on our products. In the event of any cracks, please reach out to us for a replacement or refuse delivery directly. Additionally, our guarantee covers five years against both cracking and yellowing.

Note: Bathtub size, style and shape may vary from the picture above.Instructiona purpose only