Artifacts® | K-72791

Wall-mount bath spout with flare design

Features

- Metal construction



Available Colors/Finishes

Color tiles intended for reference only.

	CP	Polished Chrome
	SN	Vibrant Polished Nickel
	AF	Vibrant French Gold
	BN	Vibrant Brushed Nickel
	BV	Vibrant Brushed Bronze
	BL	Matte Black
	2MB	Vibrant Brushed Moderne Brass
	TT	Vibrant Titanium
	DR	Deep Bronze
	BZ	Oil-Rubbed Bronze

1-800-4KOHLER (1-800-456-4537)
Kohler Co. reserves the right to make revisions without notice to product specifications.
For the most current specification sheet, go to www.kohler.com USA or www.kohler.ca Canada.
3-27-2026 15:31 - US-CA

Codes/Standards

ASME A112.18.1/CSA B125.1

Technical Information

All product dimensions are nominal.

Spout

Spout Reach:	8" (203 mm)

Recommended Products/Accessories

K-23723 Faucet cleaner

K-72573 Pivoting toilet paper holder

K-72571 Towel ring

K-72572 Double robe hook

Warranty

See website for detailed warranty information.

KOHLER® Faucet Lifetime Limited Warranty

1-800-4KOHLER (1-800-456-4537)
Kohler Co. reserves the right to make revisions without notice to product specifications.
For the most current specification sheet, go to www.kohler.com USA or www.kohler.ca Canada.
3-27-2026 15:31 - US-CA

THE BOLD LOOK OF KOHLER.

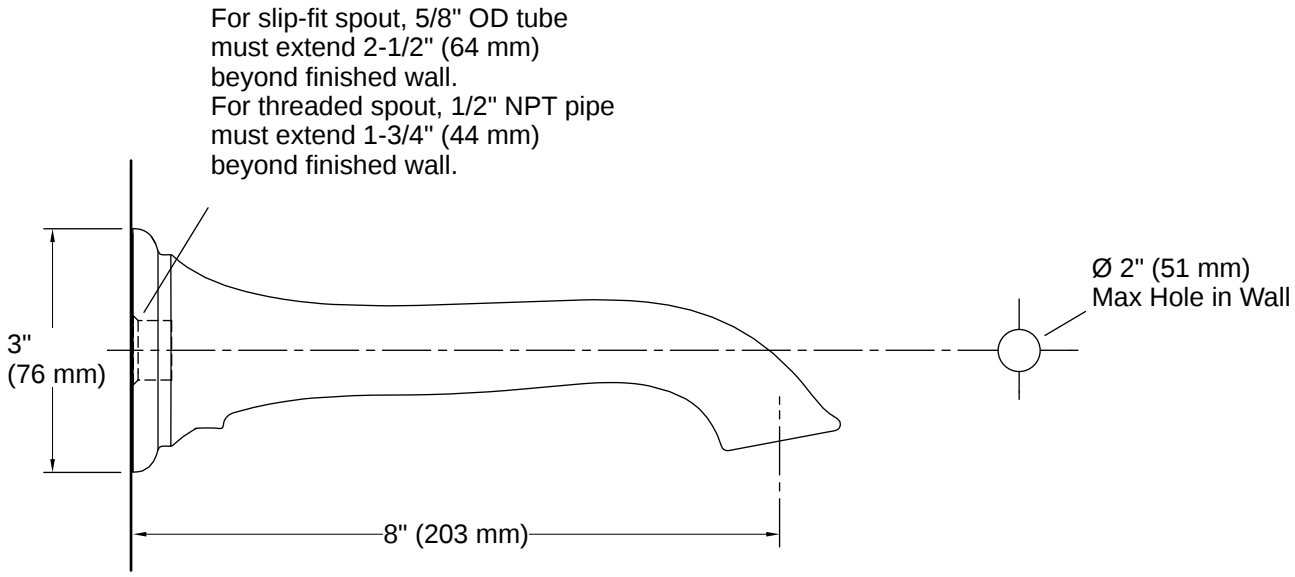

Installation

- Wall-mount installation with slip-fit connection and NPT threads

Installation Notes

Install this product according to the installation instructions.

1-800-4KOHLER (1-800-456-4537)
Kohler Co. reserves the right to make revisions without notice to product specifications.
For the most current specification sheet, go to www.kohler.com USA or www.kohler.ca Canada.
3-27-2026 15:31 - US-CA

THE BOLD LOOK OF KOHLER.