ASSEMBLY INSTRUCTION

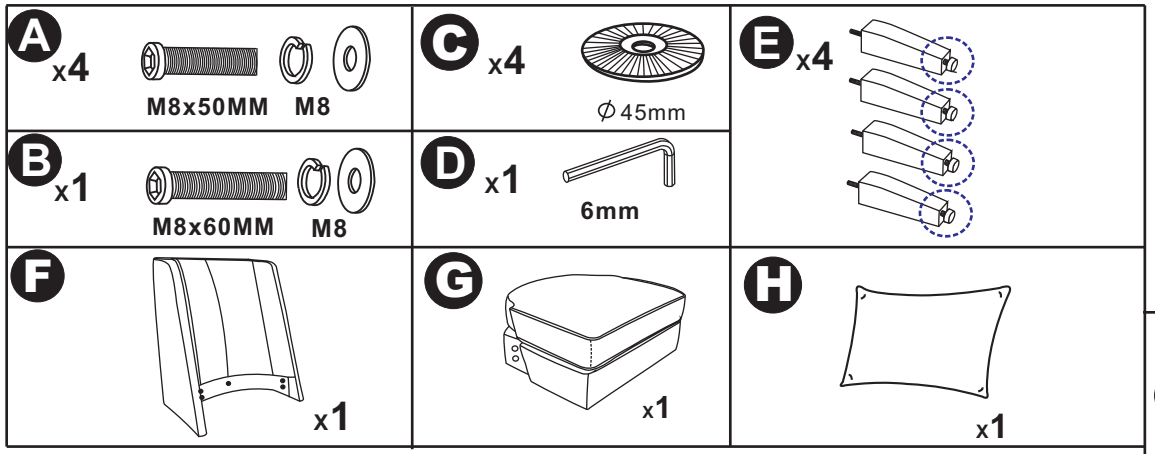

Attention!

Before assembly, pls open the zipper pocket underneath the seat (G) and take of the back cushion (H).

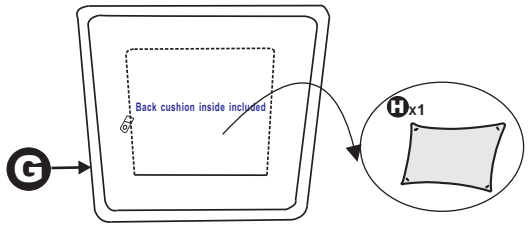

Step1

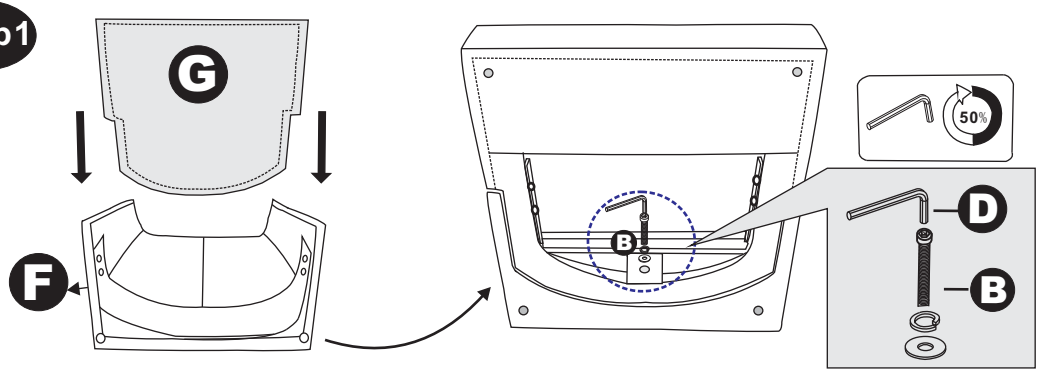

Step3

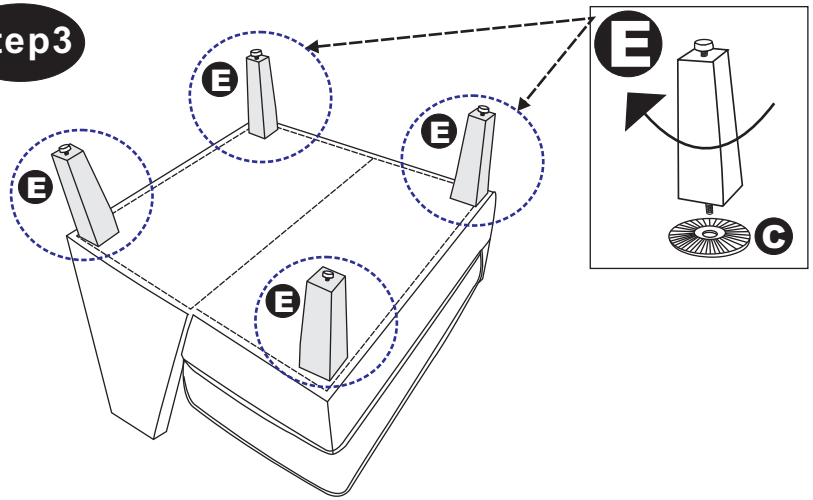

Step2

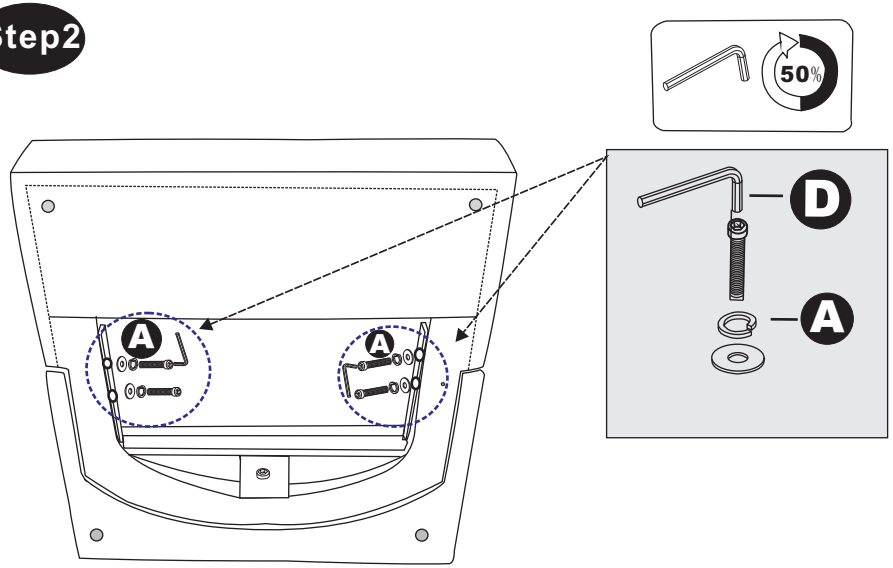
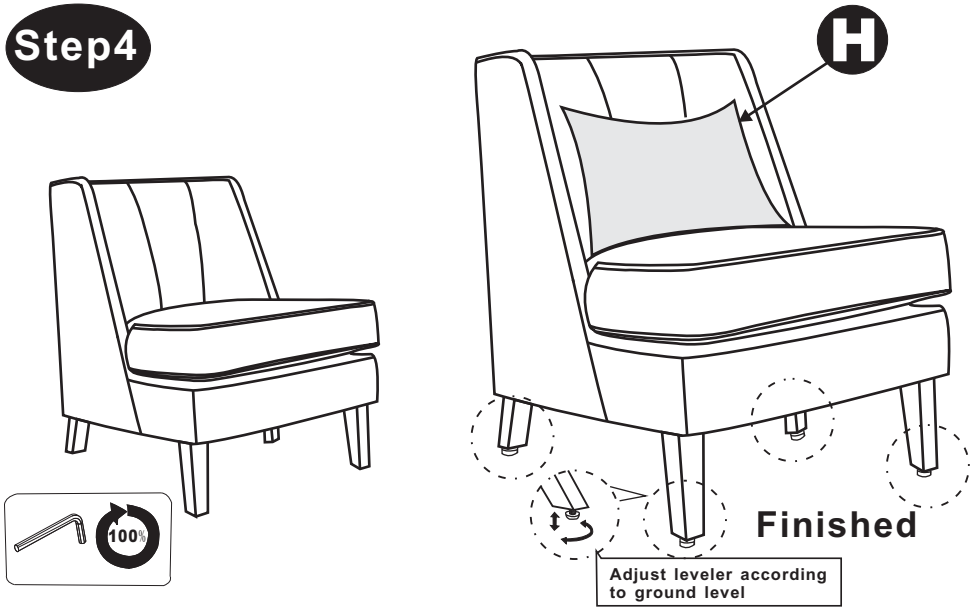
Step4