01 Table of Contents

Safety Information ---------- 02
Warranty ---------- 03
Ceiling installation ---------- 04
Accessory drawing ---------- 05
Installation procedure ---------- 06
Remote control manual ---------- 07
Match code ---------- 08
Fans Balance ---------- 09
Care and cleaning ---------- 10
Trouble shooting ---------- 11

02 Safety Information

READ ALL SAFETY INFORMATION AND INSTALLATION INSTRUCTIONS BEFORE YOU BEGIN INSTALLING THE FAN AND SANE INSTRUCTIONS.

Warning:
Kindly turn off the power when connecting cables.



1. To reduce the risk of electric shock, ensure the electricity has been turned off at the circuit breaker or fuse box before you begin.

2. All wiring must be in accordance with the National Electrical Code ANSI/NFPA 70-1999 and local electrical codes. Electrical installation should be performed by a qualified licensed electrician.

3. The outlet box and support structure must be securely mounted and capable of reliably supporting 35 lbs. (15.9 kg). Use only UL Listed outlet boxes marked "Acceptable for Fan Support of 35 lbs. (15.9 kg) or less".

4. The fan must be mounted with a minimum of 7 ft. (2.1 m) clearance from the trailing edge of the blades to the floor.

5. Do not place objects in the path of the blades.

6. To avoid personal injury or damage to the fan and other items, use caution when working around or cleaning the fan.

7. Electrical diagrams are for reference only. Light kits that are not packed with the fan must be UI-listed and marked suitable for use with the model fan you are installing. Switches must be UL General Use Switches. Refer to the instructions packaged with the light kits and switches for proper assembly.

8. After making electrical connections, spliced conductors should be turned upward and pushed carefully up into the outlet box. The wires should be spread apart with the grounded conductor and the equipment-grounding conductor on one side of the outlet box.

9. All setscrews must be checked and re-tightened where necessary before installation

WARNING: To reduce the risk of personal injury, do not bend the blade brackets (also referred to as flanges) during assembly or after installation. Do not insert objects in the path of the blades.

WARNING: To reduce the risk of fire or electric shock, this fan is NOT suitable for use with solid-state speed controls.

WARNING: To avoid possible electrical shock, make sure that the electricity is turned off at the main power box before starting work. If you feel you do not have enough electrical wiring knowledge or experience, contact a licensed electrician.

WARNING: Electrical diagrams are for reference only. Optional use of any light kit shall be UL-listed and marked suitable for use with this fan

WARNING: To reduce the risk of fire, electrical shock or personal injury, ensure that the fan mounting bracket is supported directly from the building structure or the outlet box marked "Acceptable for Fan Support of 35 lbs. (15.9 kg) or less". Use only the screws provided with the outlet box.

03 Warranty

The supplier warrants the fan motor to be free from defects in workmanship and material present at time of shipment from the factory for a lifetime after the date of purchase by the original purchaser. The supplier also warrants that all other fan parts, excluding any glass or acrylic blades, to be free from defects in workmanship and material at the time.

of shipment from the factory for a period of two years after the date of purchase by the original purchaser. We agree to correct such defects without charge or at our option replace with a comparable or superior model if the product is returned.

To obtain warranty service, you must present a copy of the receipt as proof of purchase. All costs of removing and re-installing the product are your responsibility. Damage to any part such as by accident, misuse, improper installation, or by affixing any accessories, is not covered by this warranty.

Because of varying climatic conditions this warranty does not cover any changes in brass finish, including rusting, pitting, corroding, tarnishing, or peeling. Brass finishes of this type give their longest useful life when protected from varying weather conditions. A certain amount of “wobble” is normal and should not be considered a defect.

Servicing performed by unauthorized persons shall render the warranty invalid. There is no other express warranty. Sofucor hereby disclaims any and all warranties, including but not limited to those of merchant ability and fitness for a particular purpose to the extent permitted by law. The duration of any implied warranty which cannot be disclaimed is limited to the time period as specified in the express warranty. Some states do not allow a limitation on how long an implied warranty lasts, so the above limitation may not apply to you.

The retailer shall not be liable for incidental, consequential, or special damages arising out of or in connection with product use or performance except as may otherwise be accorded by law. Some states do not allow the exclusion of incidental or consequential damages, so the above exclusion or limitation may not apply to you. This warranty gives specific legal rights, and you may also have other rights which vary from state to state. This warranty supersedes all prior warranties. Shipping costs for any return of product as part of a claim on the warranty must be paid by the customer.

04 Three ceiling installation methods

Concrete Ceiling Mounting Bracket

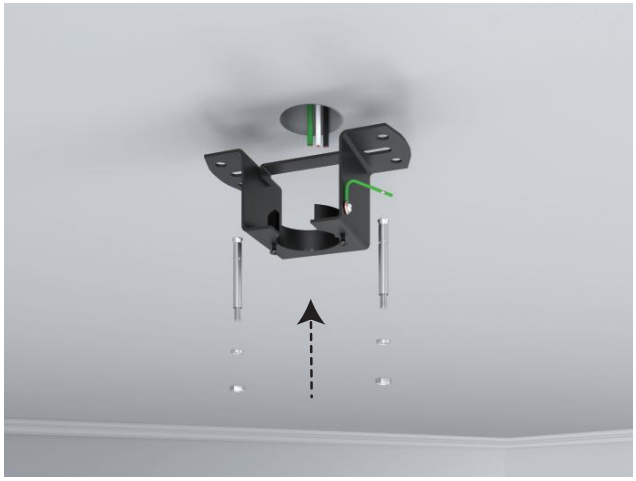

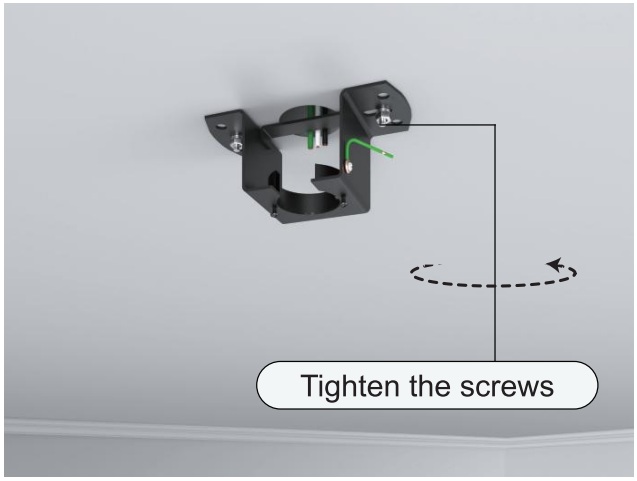

Hanger for Junction Box Mounting Bracket

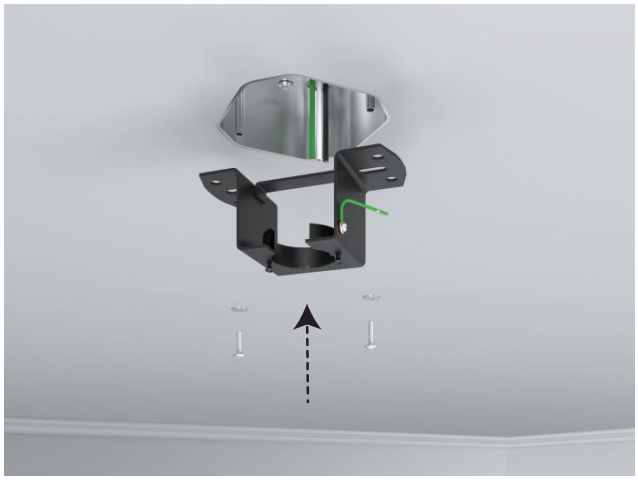

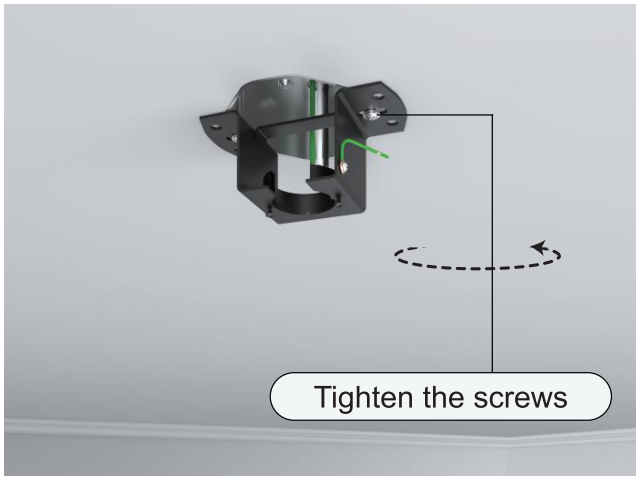

Wooden ceiling Mounting Bracket

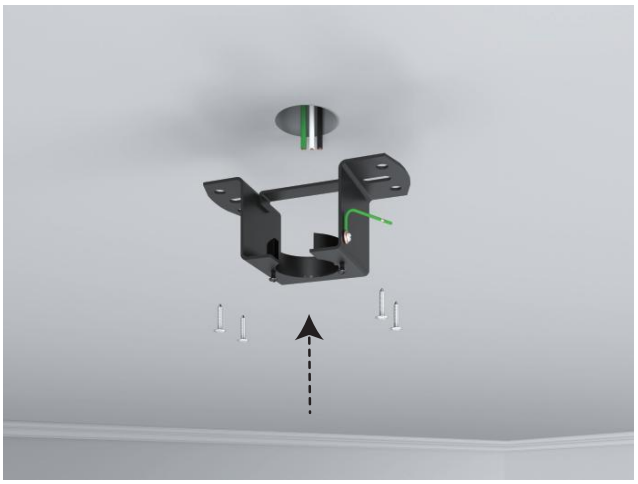

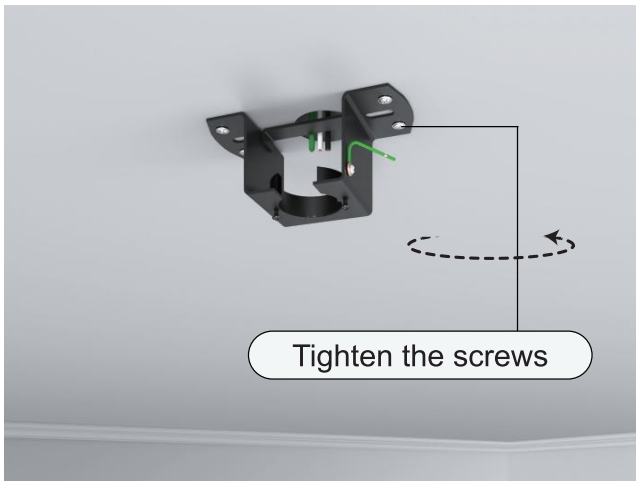

05 Accessory drawing

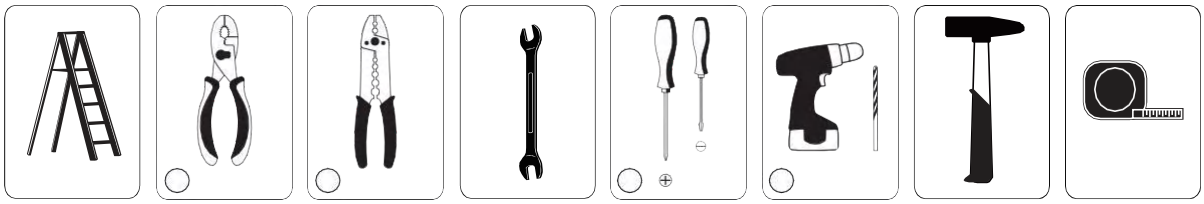







06 Installation procedure

1. Fit the gasket over the screw.

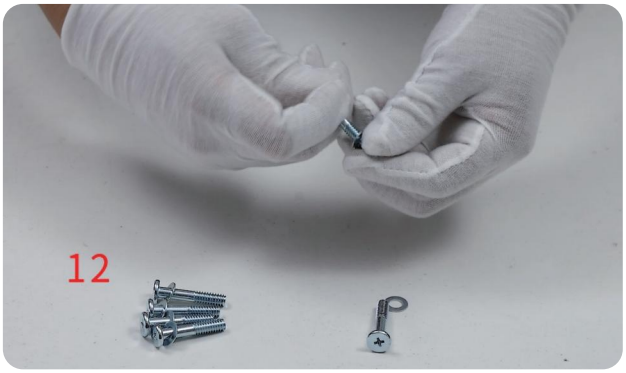

2. Loosen and remove the 4 screws pre-locked on the ceiling bracket. (Just need to remove the two screws on the right side).



3. Remove the fixed parts from the fan motor.

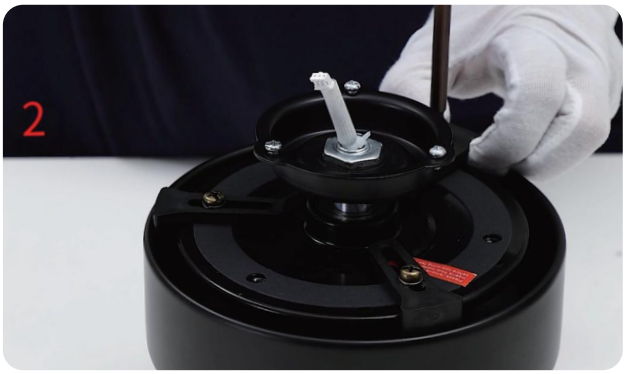

4. Place the blade gasket onto the blade, align it with the screw holes, and tighten the screws.



5. Repeat install the remaining blades, and tighten all the blade screws.



6. Loosen and remove the 3 silver screws pre-locked on the motor (Do not remove them all).



06 Installation procedure

7. Put on the lamp panel and feed the wire plugs through the center hole.



8. Tighten the 3 silver lamp panel screws.



9. Loosen and remove the 3 brass light kit screws pre-locked on the lamp panel (They will be needed later).



10. Connect the light source with the wires from the motor.



11. Align the screw holes and tighten the 3 brass light kit screws.



12. Turn the fan over.



01.Downrod installation method

If you want a ceiling fan with downrod, please follow this step.
If you want a low profile ceiling fan, please skip to page 11.

13. Install the mounting bracket with four self tapping screws.



14. Loosen the 2 screws from the top of the fan motor.



15. Remove 2 screws on the hanger ball.

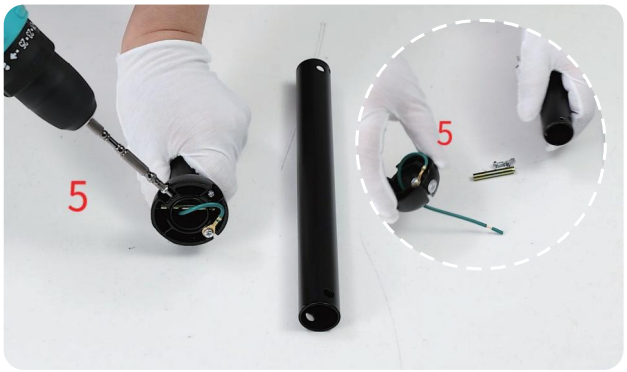

16. Remove the lock pin and the bolt of the base of the downrod.



17. Select one downrod and pass all motor wires/light cables through it.

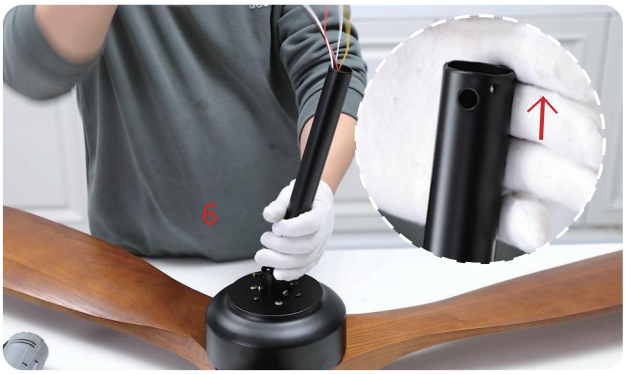

18. Insert the bolt.
Fix the bolt with the lock pin.

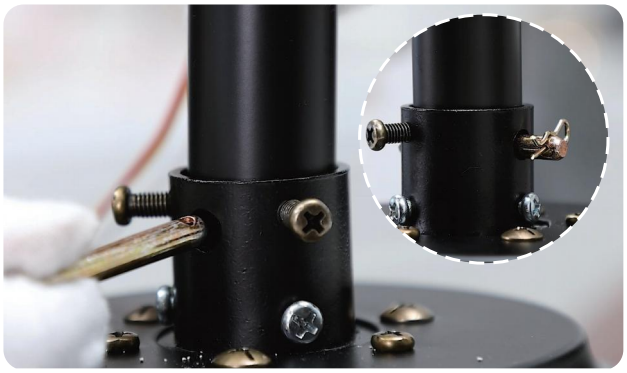

19. Tighten the 2 screws to prevent fan shaking during operation.



20. Put the decorative cover through the downrod.

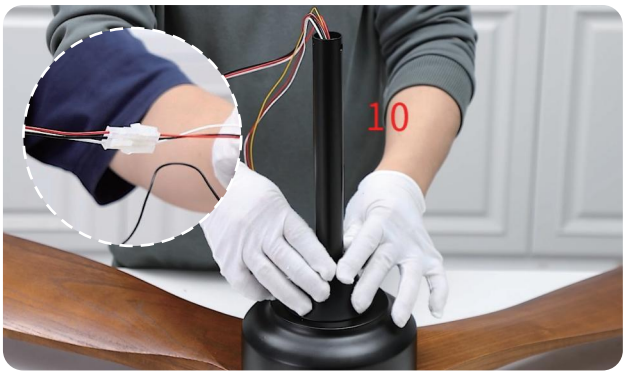

21. Put the canopy cover through the downrod.



22. Put the canopy through the downrod.



23. Put the hanger ball through the downrod.



24. Insert the bolt.



25. Use screws to align the screw holes and tighten the screws.

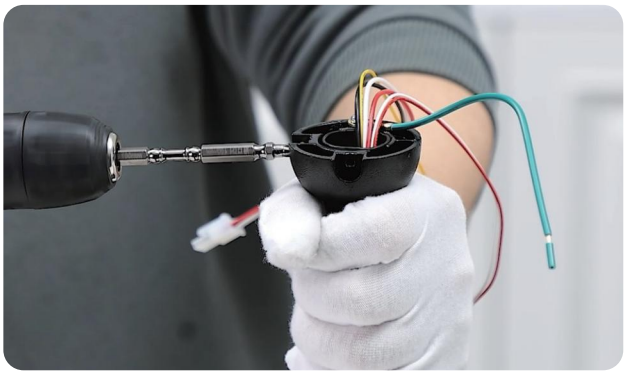

26. Connect the wire from the ceiling fan to the receiver(Red,White and Black wires).



27. Connect the wire from the ceiling fan to the receiver(Red,Yellow and White wires).

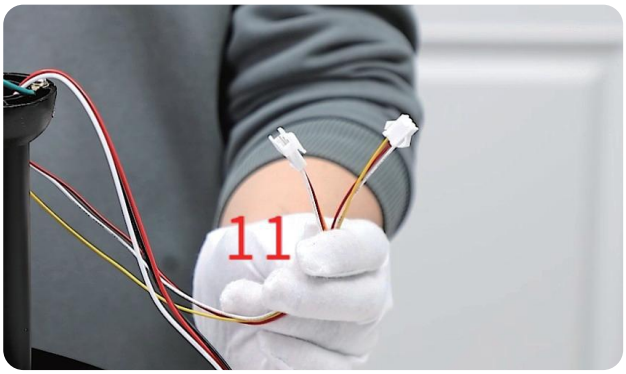

28. All wires are connected.

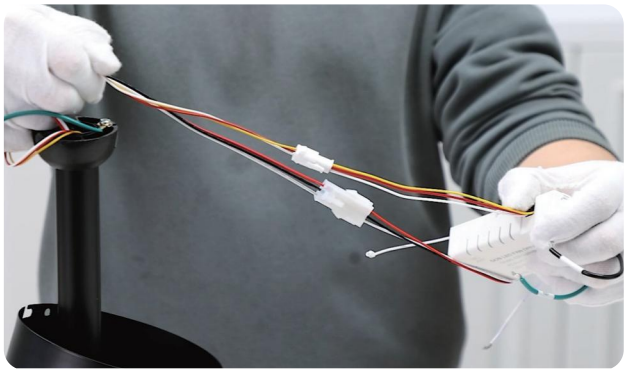

29. Place the downrod ball into the slot in the mounting bracket. If the slot doesn't align properly then rotate the ball.

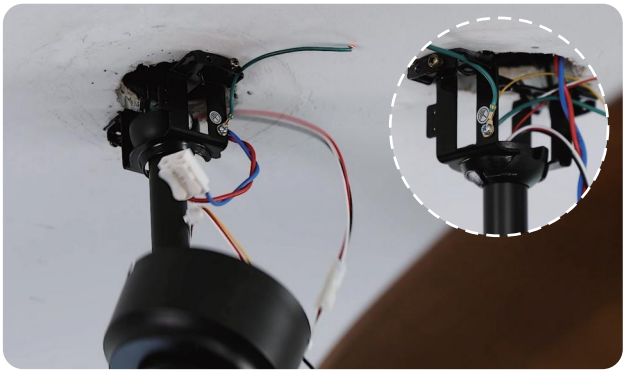

30. Use wire connecting nuts to connect the three ground wires(Green)coming from the downrod, receiver and hanging bracket.

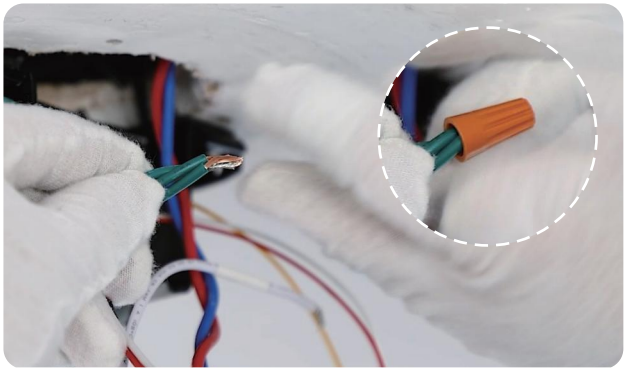

06 Installation procedure

31. Connect the fan live wire (black) to your house live wire; Connect the fan neutral wire (white) to your house neutral wire.

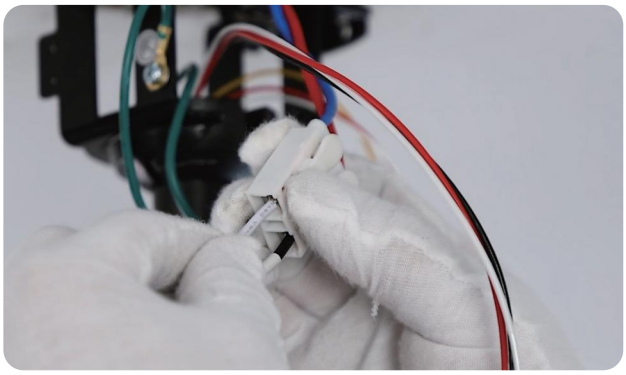

32. Put the receiver into the mounting bracket.



33. Attach housing onto mounting bracket, aligning the keyhole slots on the housing with the screws on mounting bracket and twist clockwise till tight.



34. Tighten the screws.



35. Lift the canopy cover to the canopy, then turn and tighten.



36. Install the lamp shade and rotate it to lock.



02. Flush mount installation method

Continue from step **12** on page **6**

37. Install the mounting bracket with four self tapping screws.



38. Tighten the 2 screws from the top of the fan motor.



39. Remove the 3 screws from the fan motor (They will be needed later).

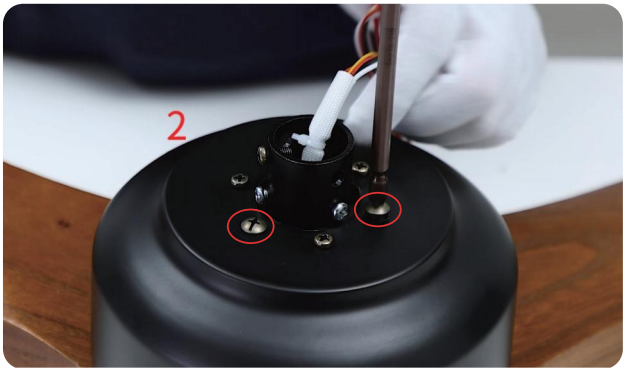

40. Put on the canopy and feed the wire plugs through the center hole.



41. Align the 3 screws with the screw holes and tighten them.

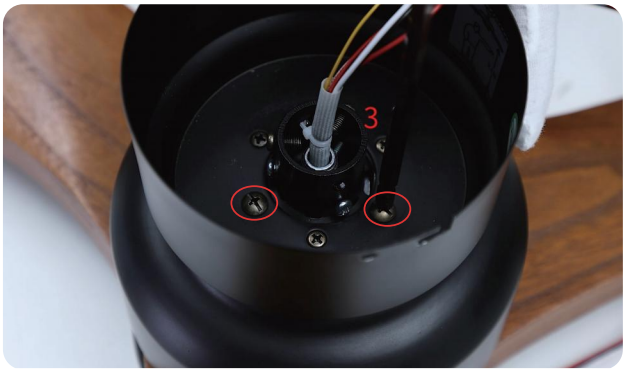

42. Put the receiver into the mounting bracket.

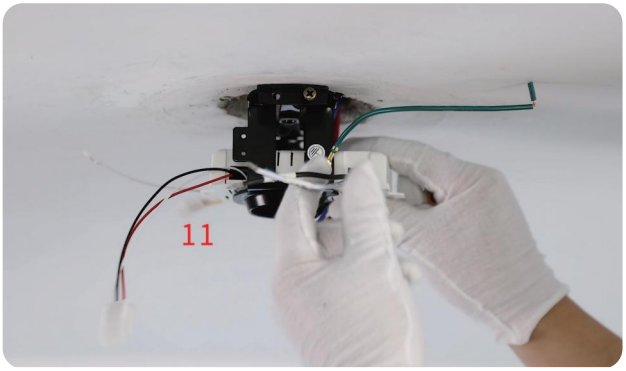

43. Use wire connecting nuts to connect the ground wires (Green) coming from the receiver and mounting bracket.

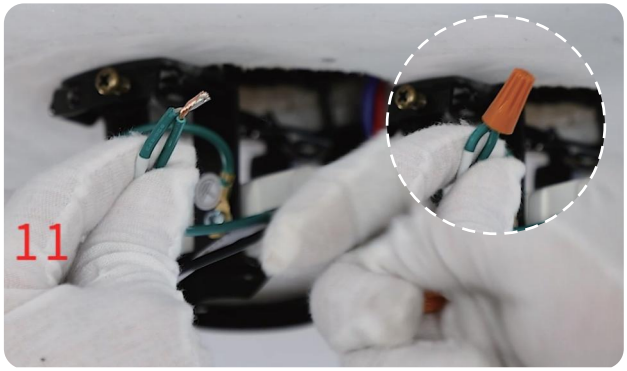

44. Connect the fan live wire (black) to your house live wire; Connect the fan neutral wire (white) to your house neutral wire.

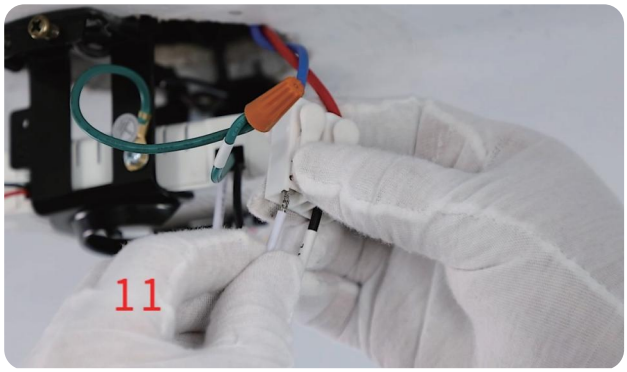

45. Connect the wire from the ceiling fan to the receiver(Red,White and Black wires).

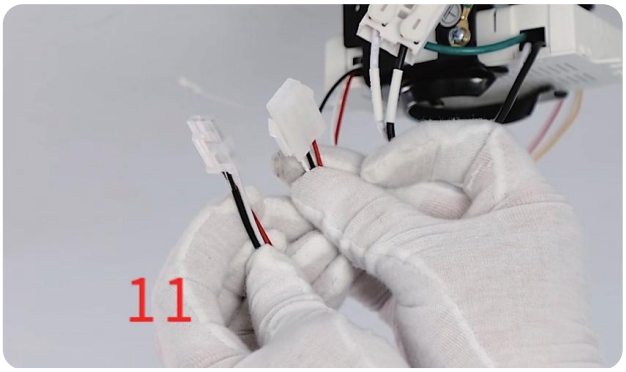

46. Connect the wire from the ceiling fan to the receiver(Red,Yellow and White wires).

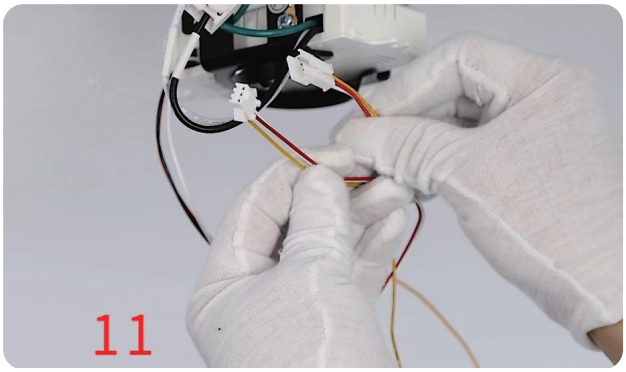

47. Attach housing onto mounting bracket, aligning the keyhole slots on the housing with the screws on mounting bracket and twist clockwise till tight.



48. Tighten the screws.



06 Installation procedure

49. Install the lamp shade and rotate it to lock.



WARNING: Turn off the electric power during installation and making wire connection.

1. Connect the wire which from ceiling fan into the receiver
2. Connect the wire from receiver with the wire from house.

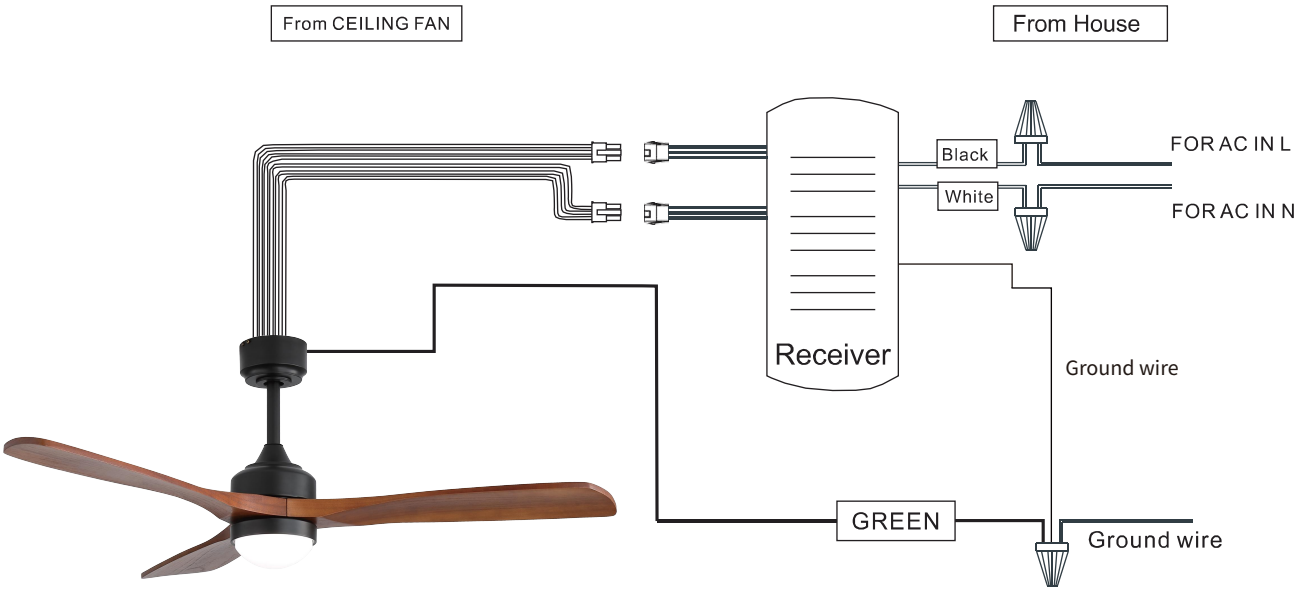

07 Use of remote control

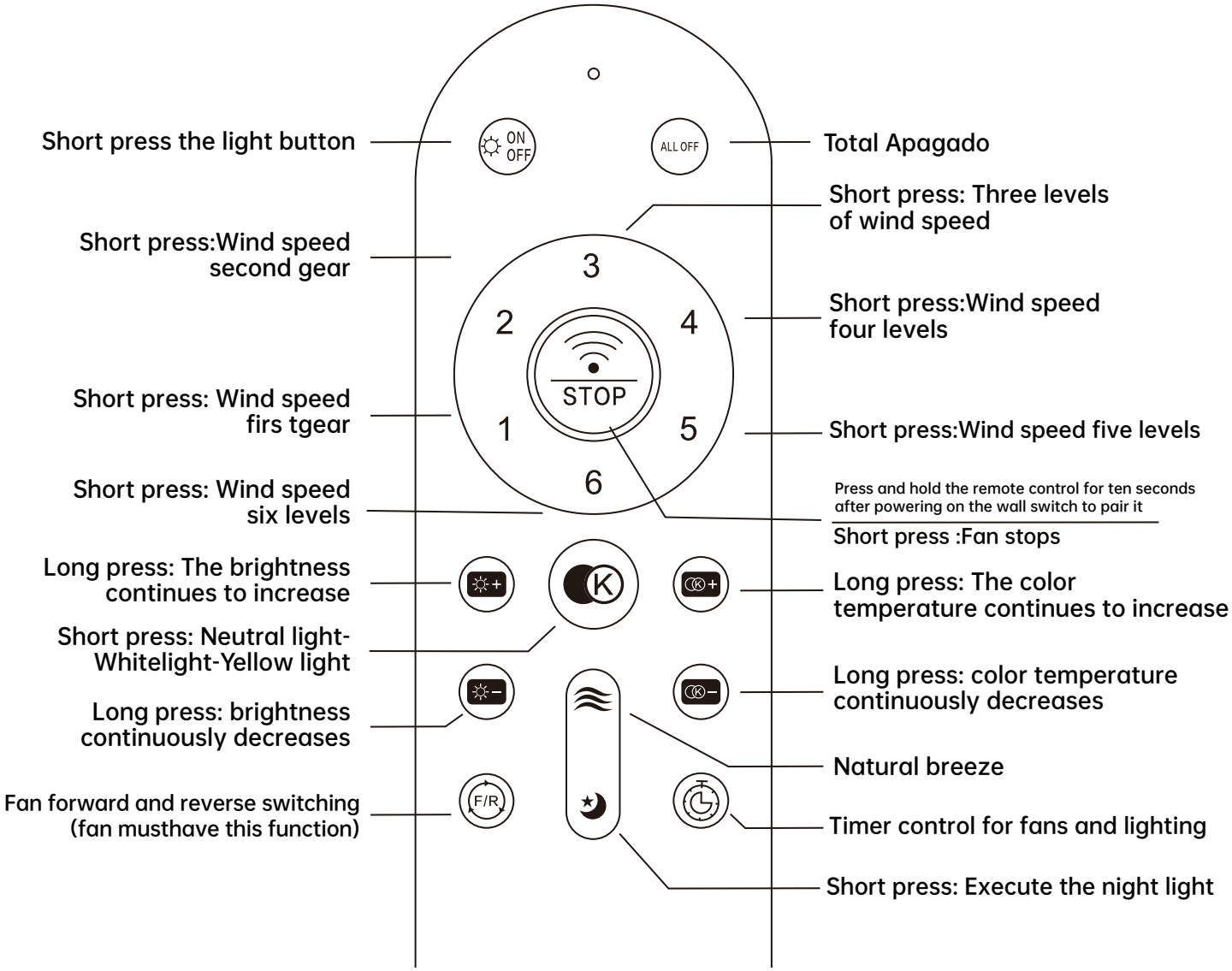

For 5 Seconds To Clear The Pairing Function.

Timer function: The lights flash once for 1 hour, twice for 4 hours, and three times for 8 hours. Press the main switch to cancel the timer function. This feature is used to simultaneously turn off the lights and the fan.

The remote controller only needs to be paired once. After the paired product,the controller will have memory. The products have been paired before leaving the factory. When the remote control is damaged or lost, it is necessary toimplement remote control pairing before using a new remote control.

Note: the remote control must match the same code receiver

When the reversible button is pressed, the fan slowly slows down to a stop and then begins to reverse.

08 Match code

if it does not work



1.Turn on the main switch.



2. Press and hold the remote control for ten seconds after powering on the wall switch to pair it.

09 Adjusting and balancing your ceiling fan blades

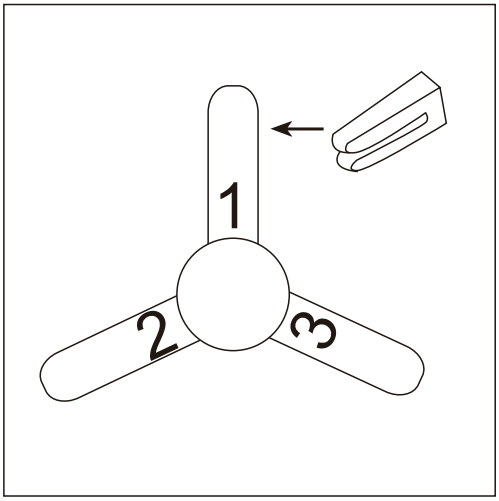

Put the clip in the center of a blade.
turn on the fan and if the shake persists, put the clip in another blade until the shake is reduced. Then this blade will need the counterweight.

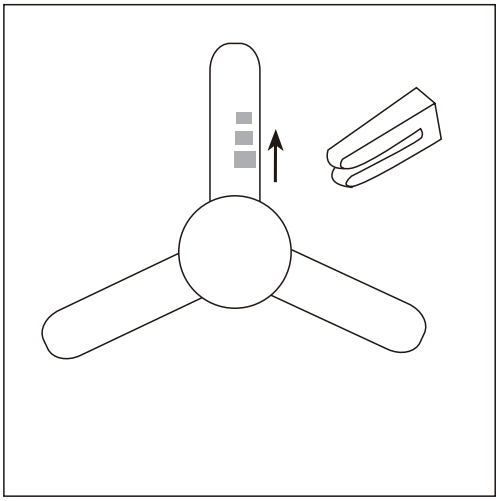

Place the clip on the blade that needs the counterweight and try the best place to place it, from the center to the tip of the blade, until the wobble disappears.

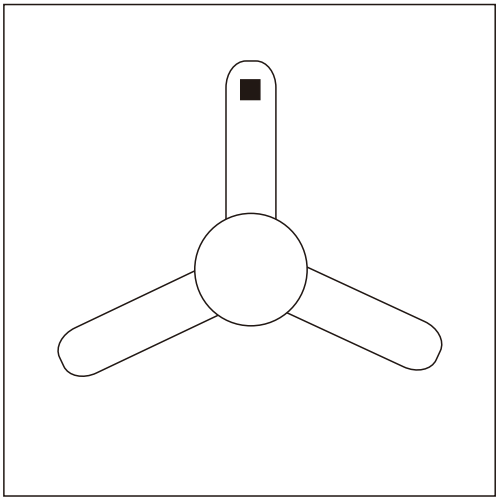

Paste the counterweight on the surface of the blade which near the clip, remove the clip and test the fan. If it keep staggering, put another counterweight. if it gets worse, try another better area to place it.
please try it patiently till the fan is balance.