SH42/52/60
V20260227

User Manuals

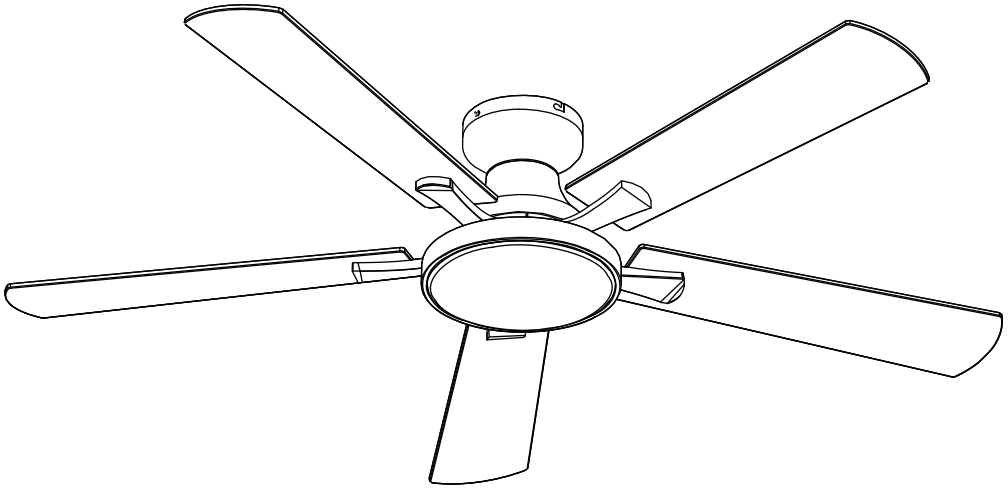

Scan for support or
view installation videos

After-sales Email:
support@fanlamppro.com

To assist you faster, please share your order confirmationscreenshot so we can quickly resolve this.

CEILING FAN

WARM TIPS

1. About Light Memory:

Wall switch:

*Keep the light needed on over 10 seconds

*Turn off the wall switch over 10 seconds

* Turn on the wall switch, light will keep the same before turn off.

Remote controller:

* Just use light on/off button, it will always keep the light setting.

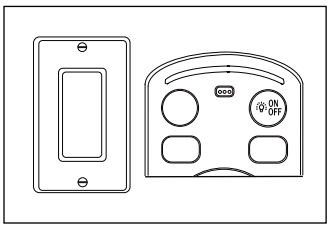

2. Using a full range dimmer switch to control fan speed will damage the fan.

3. The lighting kit is replaceable.

TOOLS MAY REQUIRED


Ladder

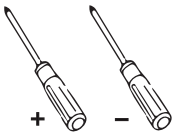

Screwdriver

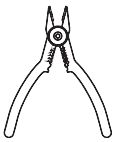
Wire Strippers

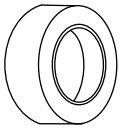
Tape


Goggles

ACCESSORIES


AA


BB

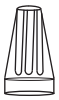
CC


DD

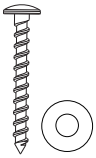
EE

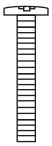
FF

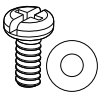
GG


HH

AA	Expansion screw	**2**
BB	Balance kit	**2+1**
CC	Wire nut	**4**
DD	Plastic expansion tube	**5**
EE	Self-tapping screw and washer	**5+7**
FF	J-box screw	**3**

GG	Blade screw and red washer	**21+19**
HH	Arm screw	**4 spare**

PACKAGE CONTENTS

- In addition to the parts included in the accessory package, there are a total of 9 fan light accessories. Please check carefully whether any parts are missing from the package and make sure to confirm all parts inside the box. (Each 1 pack)

Lampshade	Lamp body	Fan motor host
A 	**B** 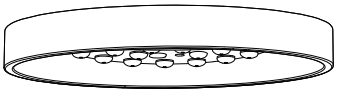	**C** 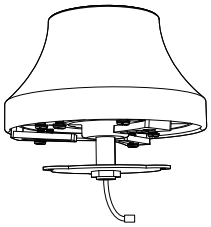
1	**1**	**1**

Canopy cover	Fan blade	Blade arm
D 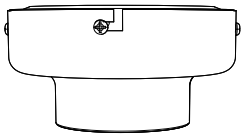	**E** 	**F** 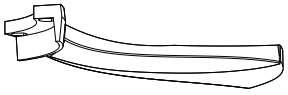
1	**5**	**5**

Mounting bracket	Receiver	Remote controller
G (spare) 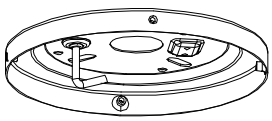	**H** 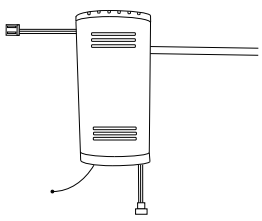	**I** 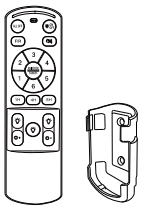
1	**1**	**1**

IMPORTANT WARNING

- To reduce the risk of electric shock, turn off all power sources.
- All wiring must comply with the National Electrical Code and local electrical codes. Electrical installation should beperformed by a qualified licensed electrician.
- WARNING: To reduce the risk of personal injury, use only the two steel screws (and lock washers) provided with the outlet box for installation. Most outlet boxes are typically used to support lighting devices instead of fans and may needto be replaced. lf in doubt, please consult a qualified electrician.

⚠ WARNING

TO REDUCE THE RISK OF FIRE
ELECTRIC SHOCK OR PERSONAL INJURY
MOUNT FAN TO OUTLET BOX MARKED
ACCEPTABLE FOR FAN SUPPORT

- Do not turn the fan blades until the fan installation is completed.
- To avoid personal injury or damage to the fan and other items, maintain and clean the fan with care.
- Do not use water or detergents to clean the fan or fan blades. A dry rag or slightly damp cloth is suitable for cleaning.
- Electrical diagrams are for reference only. Please refer to the instructions used with the packaging for properly assembled lighting kits.

ElECTRICAL AND STRUCTURAL REQUIREMENTS

- Your new ceiling fan will require a grounded electrical supply line of AC110~130V/60Hz15 Amp Circuit. Electrical code requires use of a fan-rated outlet box to support the extra weight and motion associated with a ceiling fan. A fan-rated box will be labeled as suchand typically supports up to a 70lbs ceiling fan. Fan-Rated Outlet Boxes vary in rating sand design. Ensure the ratings of your ceiling fan outlet box meet the requirements for the ceiling fan being installed. Figure 1, Figure 2 and Figure 3 depicts different structural configurations that may be used for mounting the outlet box.
- Low-profile use (Figure 1):
  A 1/2-deep pancake box is meant to be screwed to a joist or block. It is used if only one cable is coming into the box. It is also available in a saddle-mount configuration.
- Deep-profile use (Figure 2)
  A 2-1/4" deep box can be attached to blocking between joists and is roomy enough to handle more than one cable.
- Brace use (Figure 3)
  Paired with a deep box, this hanger is meant to span between two joists and takes the place of wooden blocking.

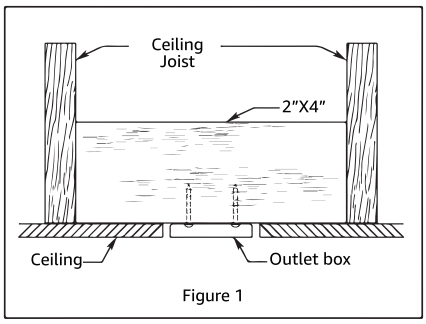

Figure 1

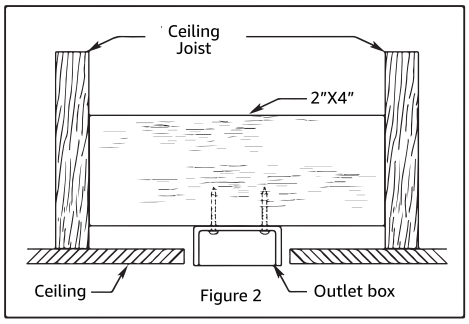

Figure 2

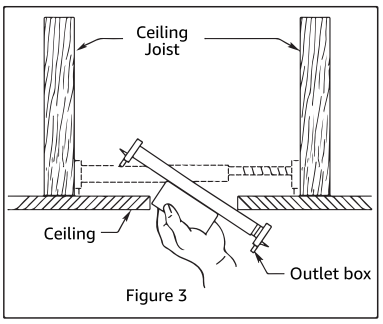

Figure 3

- If your fan is to replace an existing light fixture, turn power off at the main fuse box and remove the existing light fixture.

⚠ WARNING

Turning off wall switch is not sufficient, to avoid possible electrical shock be sure electricity is turned off at the main fuse box before wiring. All wiring must be in accordance with National and Local codesand the ceiling fan must be properly grounded as a precaution against possible electrical shock.

⚠ WARNING

Do not operate this fan with a variable(Rheostat) wall controller or dimmer switch. Doing so could result in damage to the ceiling fan's remote control unit.

INITIAL INSTALLATION

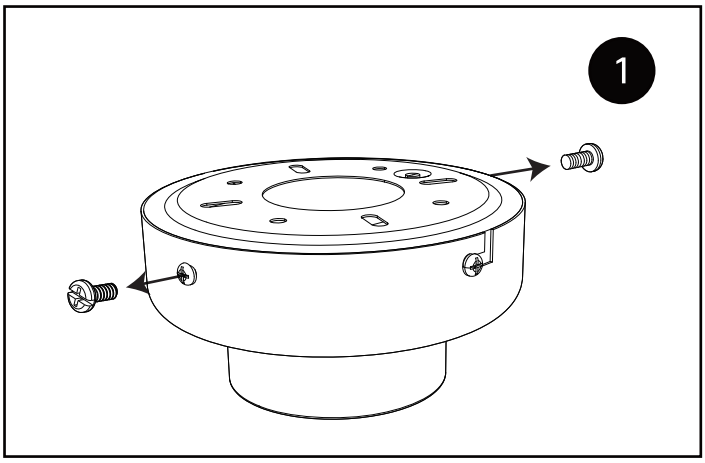

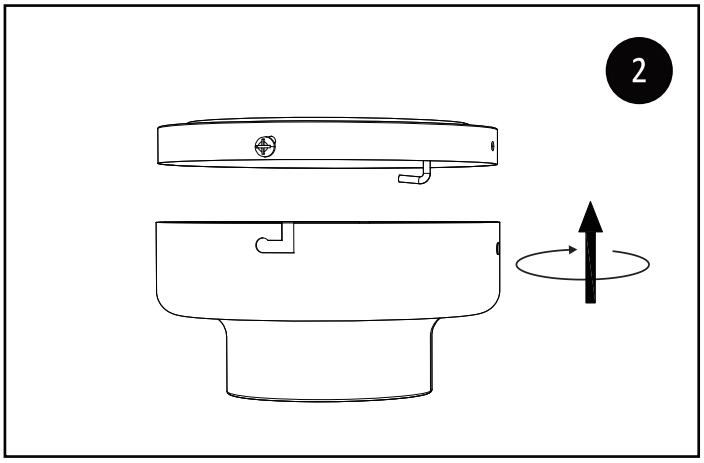

1. Take out the 2 round hole screws from canopy.
2. Loosen the 2 screws and then rotate to remove the bracket.

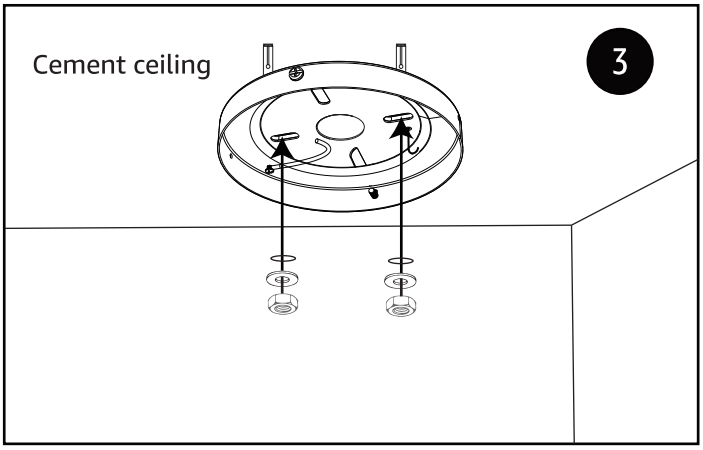

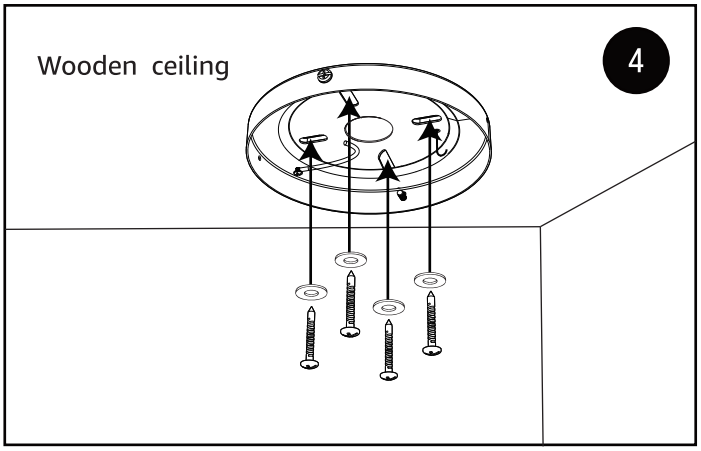

3. Mount the bracket to the ceiling and use appropriate accessory screws to secure it based on the type of ceiling material.
   Cement ceiling: Drill holes into the cement ceiling, then use expansion screws for fixation.
4. Wooden ceiling: Use self-tapping screws and washers to secure it to the wooden ceiling.

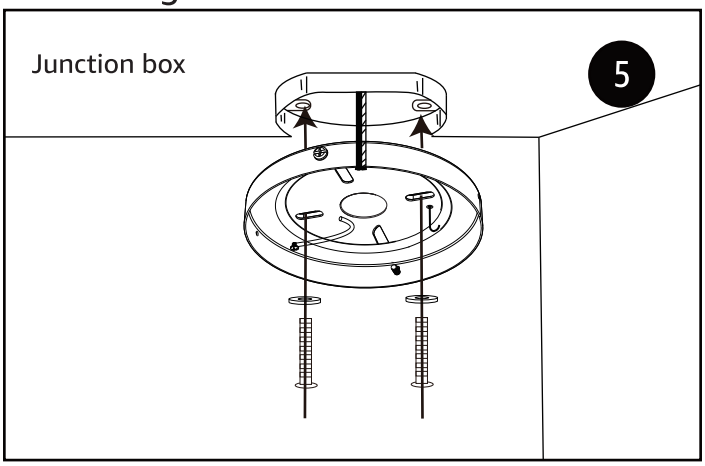

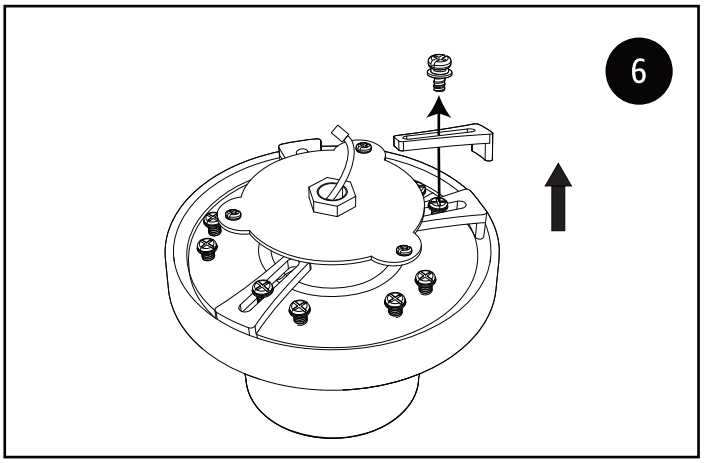

5. Junction box: Use j-box screw and washer to fix the bracket to the ceiling.
   (Please choose the corresponding hole size of 3 inches or 4 inches based on the dimensions of the ceiling junction box for installation.)
6. Use a screwdriver to unclip the retaining clip, and then remove the 10 arm screws from the host part.

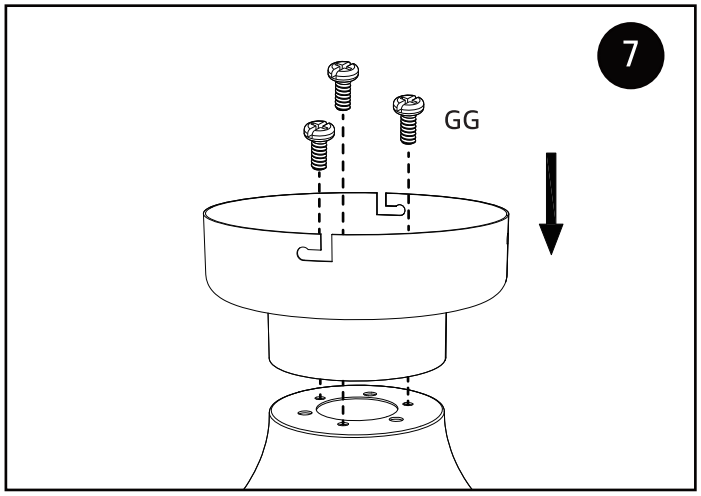

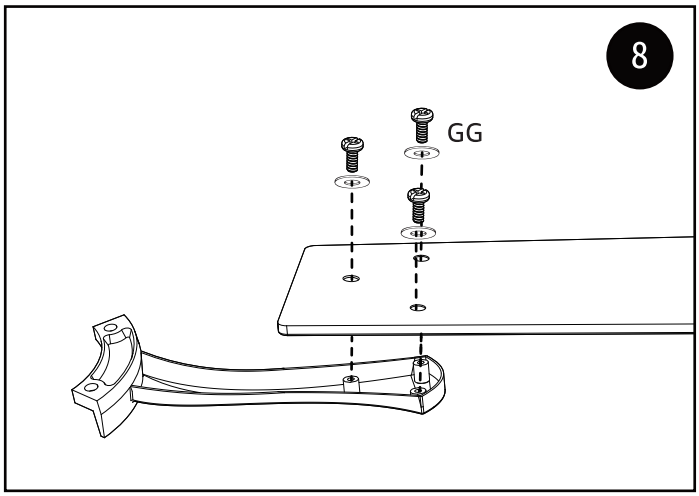

7 Install the canopy onto the fan motor host, aligning it with the holes, and then tighten the 3 screws.

8 Attach the blade arms to the fan blades using 3 screws and washers.
(Repeat this step for the remaining fan blades installation)

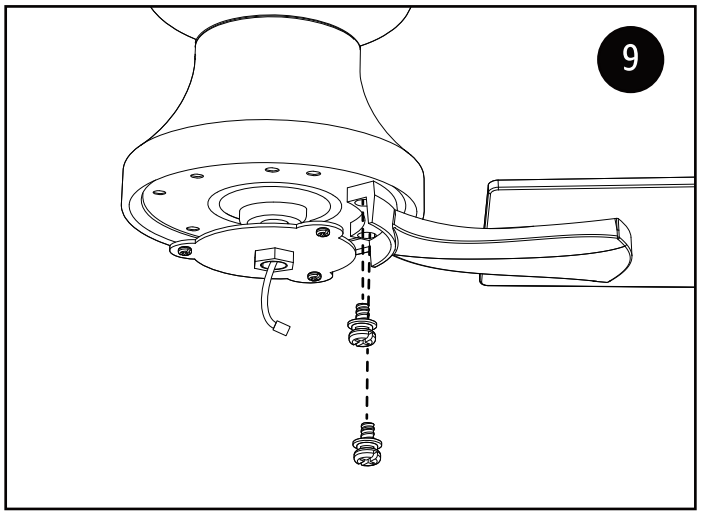

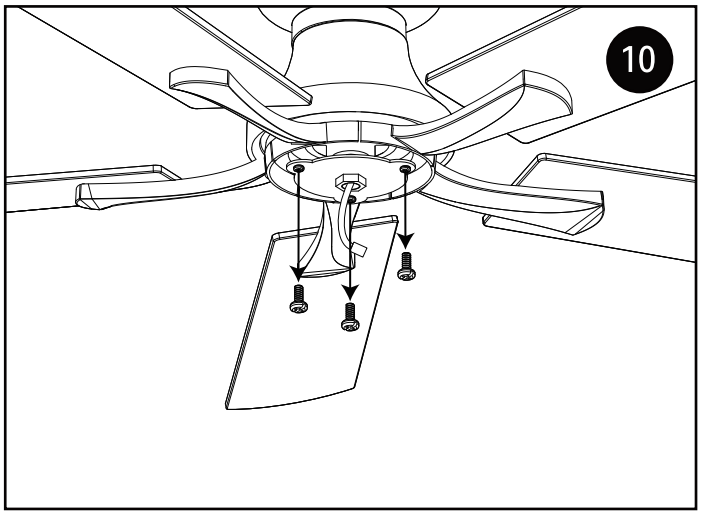

9 Secure the blade arms assembled in step 8 to the fan motor host using the screws removed in step 6. (Repeat this step for the remaining fan blades installation.)

10 Remove the three screws from the circular plate on the fan motor housing.

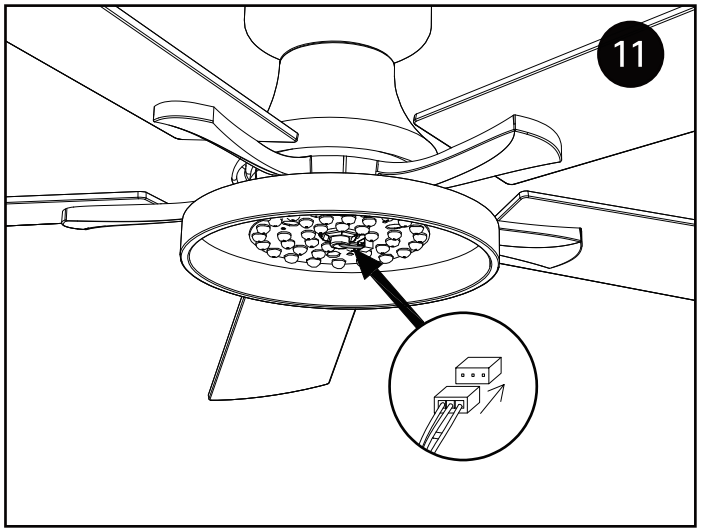

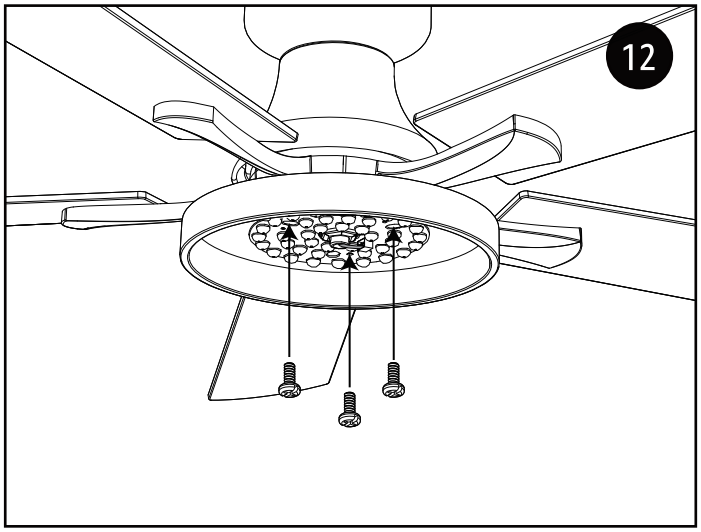

11 Connect the LED board wire connector.

12 Install the lamp body onto the main body and tighten the screws.
(Use the 3 screws from step 10.)

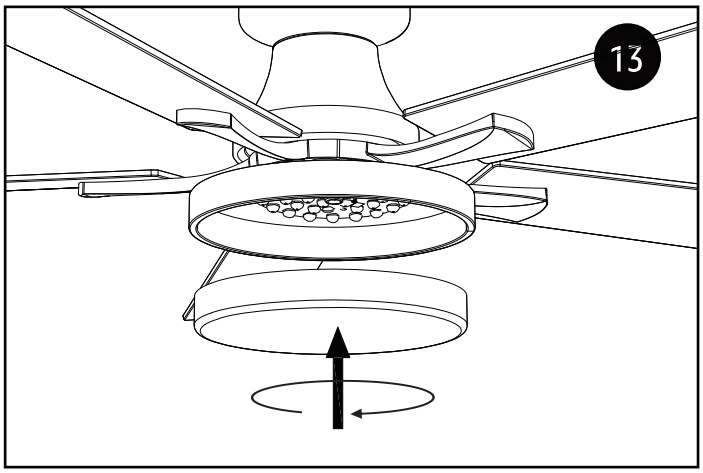

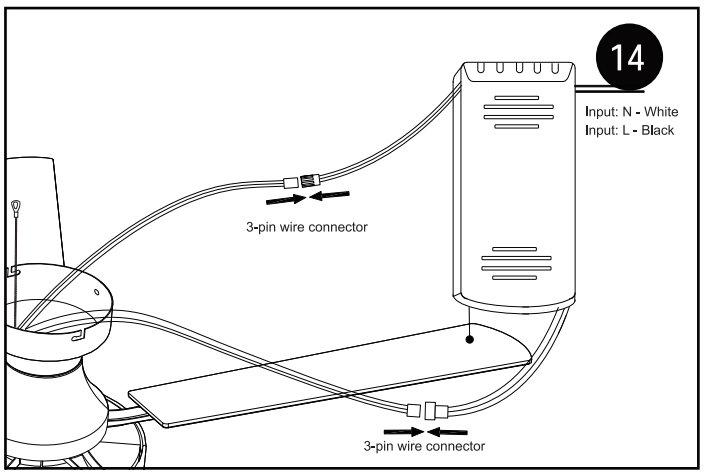

13 Locate the locking point and screw the lampshade into place by turning it upward.

14 Connect the wires between the controller and the fan motor: connect the 3-pin wire connector.

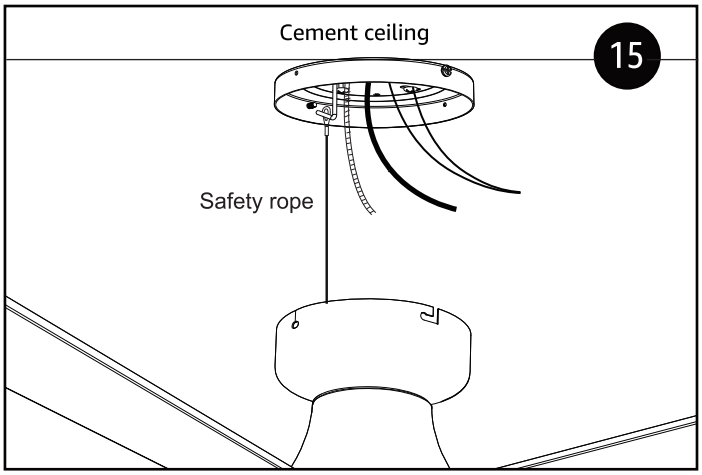

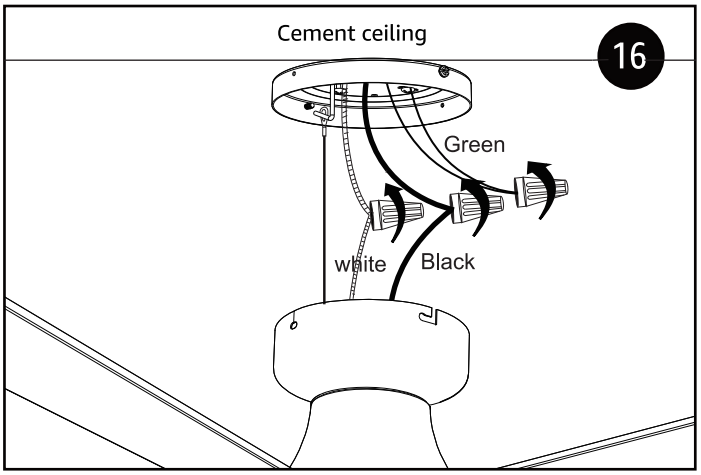

15 Hang the safety rope on the bracket hook.

16 Wiring:
Connect the"Neutral wire" (white wire) from ceiling to the white wire.
Connect the "Live wire" (black wire) from ceiling to the black wire.
Connect the "Ground wire" (green or yellow/green or bare) from ceiling to the bare wire.

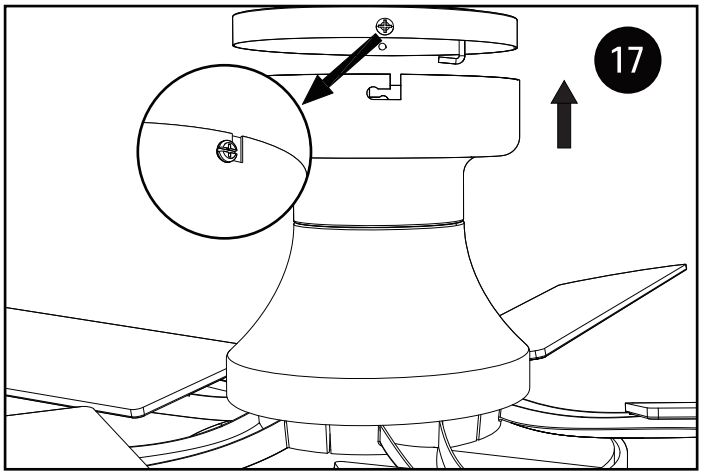

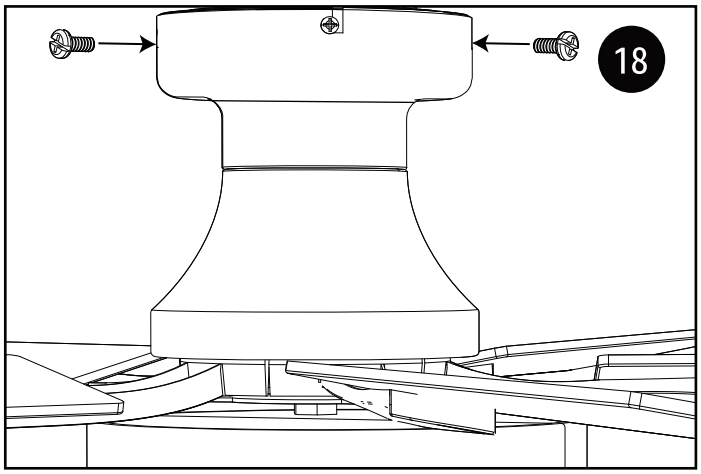

17 Align the canopy L slot to the bracket screw, rotate to certain position.

18 Lock the other 2 screws and ensure that the 4 screws are tightened.

HOW TO OPERATE YOUR CEILING FAN

- IMPORTANT: Using a full range dimmer switch(not included) to control fan speed will damage the fan. To reduce the risk of fire or electrical shock, do not use a full range dimmer switch to control the fan speed(Figure 1).
- Restore electrical power to the outlet box by turning the electricity on at the main fuse box.(Figure 2).



(Figure 1)

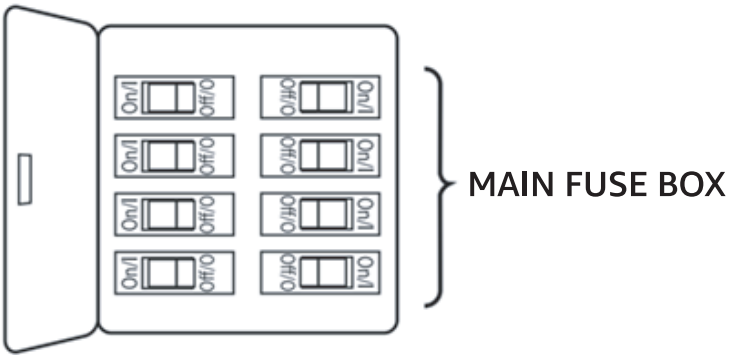

(Figure 2)

⚠ WARNING

Check to see that all connections are tight, including ground, and that no bare wire is visible at the wire connectors, except for the ground wire.
Do not operate this fan with a variable(Rheostat) wall controller or dimmer switch. Doing so could result in damnage to theceiling fan's remote control unit.

INSTALLATION RECOMMENDED

Room Size:

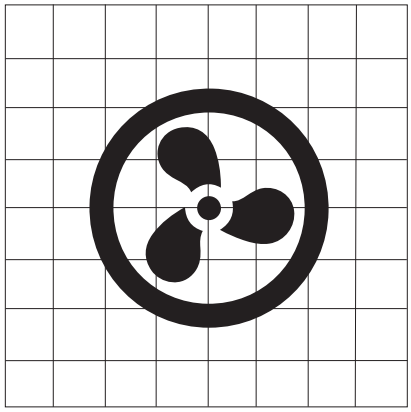

RANGE FROM 8FT X 10FT TO 9FT X 11FT
RANGE FROM 12FT X 12FT/15FT
RANGE FROM 16FT X 20FT TO 18FT X 22FT

Room Height:

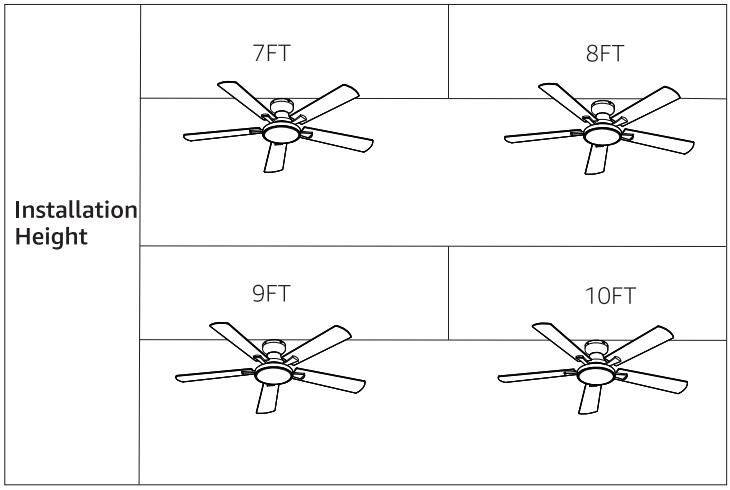

REMOTE CONTROL

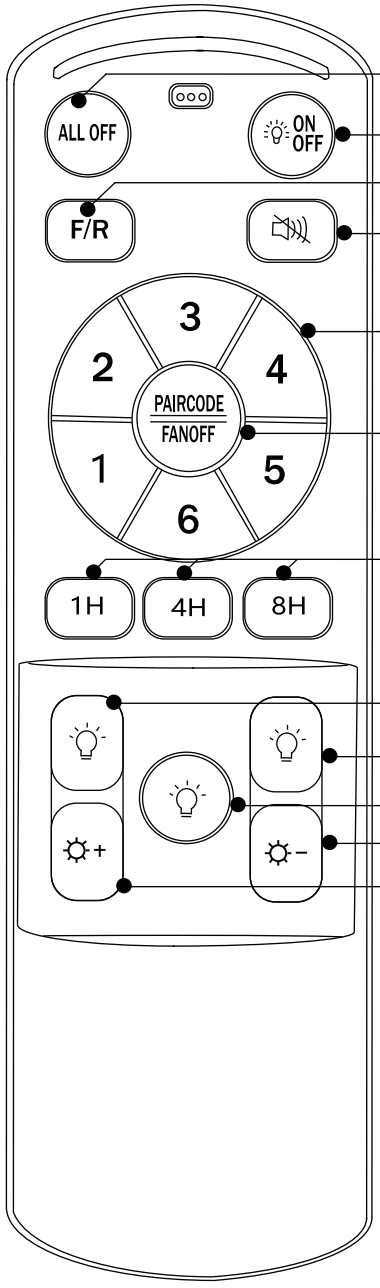

Light & fan all off

Light on/off

Forward or reverse

Remote controller mute

Fan speed(fan on)

Press and hold: pairing button
Click: fan off

Fan stop & light off after 1/4/8 hours

Warm light

Cold light

Neutral light

Brightness -

Brightness +

Installing Wall Plate:
Attach wall plate using the two provided screws.

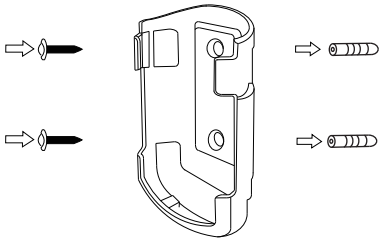

To operate the fan, please install 2 AAA batteries (included) in the handheld remote transmitter. If not used for extended periods of time, remove the batteries to prevent damage to the transmitter. Store the remote away from excessive temperatures and humidity.

Pairing method: (single/multiple fans)
The remote control transmitter can be used to control multiple receivers.
1. For the ceiling fan you want to pair, turn the main power switch off for at least 10 seconds.
2. Turn on the main power wall switch of the ceiling fan, then within 3 seconds, press and hold the **pairing button** until hearing a long beep and light flash.
3. The pairing process is completed. If the pairing process is unsuccessful, repeat above steps after turning off wall switch 1 minute.

APP OPERATION

- NOTE: For iPhone users, you can search for "FanLamp Pro" in the AppStore or scan the QR code to download. For Android users, please scan the QR code to download. **(Please enable Bluetooth and pair the fan with app to control it!)**



1. Ensure Bluetooth is enabled on your mobile device.

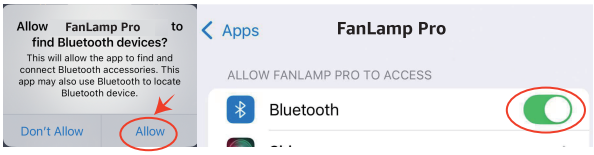

2. Make sure you allow this app to access Bluetooth. (For iPhone users, Android users can ignore this step.)
Method 1: Click "Allow" when opening the app for the first time.
Method 2: Go to your phone's settings, find the app, and enable Bluetooth access.

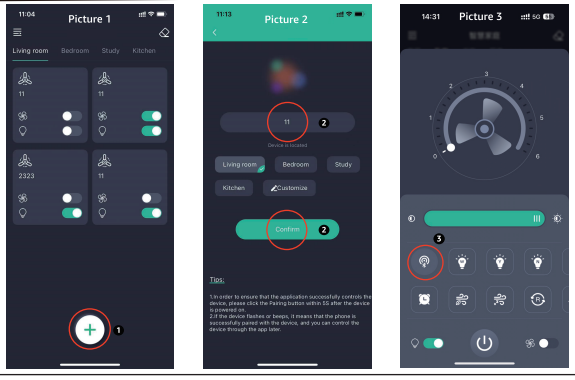

Picture 1

3. Enter the app page and click the plus sign below (Add group).

Picture 2

4. Enter any name, then click Confirm.

Picture 3

5. Turn on the fan's power wall switch, once the light is on, press the pairing button within 5s. The fan light will flash twice to indicate successful pairing.

	Turn on the fan's power wall switch, once the light is on, press the pairing button within 5s. When the fan light flashes twice, it indicates that the fan has been successfully paired with the phone and can now be controlled through the phone.
	Slide to change the fan speed
	Slide to change the brightness of the light
	Quick switch for "Natural" light color
	Quick switch for "Yellow" light color
	Quick switch for "White" light color
	Not available for this model
	Timer the fan
	Natural wind: fan speed will change automatically when use this function
	Sleeping wind
	Night light (10% brightness in neutral white)
	Not available for this model
	Fan moves forwards
	Fan moves reversely
	Not available for this model
	Light off/on
	Fan off/on

TROUBLESHOOTING

PROBLEM	SUGGESTED REMEDY
If fan does not start	1. Check main and branch circuit fuses or circuit breakers. 2. Make sure that the wall control is turned "ON" 3. Check line wire connections to fan and switch wire connections in switch housing. CAUTION: Make sure main power is turned off. 4. Make sure battery has power, change battery(2*AAA) to try again. 5. The remote controller is not paried, check Page.9 to pair. 6. The motor or receiver or remote controller is fault, contact our customer service. 7. Make sure do not connect to any dimmer or fan speed adjust switch.
If fan sounds noisy	1. Make sure all screws in motor housing are snug. (not over tightened) 2. Make sure the screws which attach the fan blade bracket to the motor are tight. 3. Made sure the blade is correct installed, blade arm "UP" side up. 4. Too close to the wall, make sure the blades at least 3ft to the wall. 5. Make sure wire connectors in switch housing are not rattling against each other or against the interior wall of the switch housing. CAUTION: Make sure main power is turned off before entering switch housing. 6. DO NOT USE a Solid State variable speed control. 7. Allow "break-in" period of 24 hours. Most noises associated with a new fan will disappear after this period. 8. Made sure the ceiling bracket is screwed securely.
If fan wobbles	All blades are weighed and grouped by weight. The following procedures should eliminate most of the wobble. Check for wobble after each step. 1. Check that all blades are screwed firmly into motor housing. 2. Make sure that canopy and mounting bracket are tightened securely to ceiling junction box and junction box is mounted firmly to ceiling joist. 3. Make sure the ball head into the slot. (*downrod installation only) 4. Make sure the downrod is well fixed by screws.(*downrod installation only) 5. Interchanging two adjacent blades could redistribute the weight and possibly result in smoother operation.

TROUBLESHOOTING

PROBLEM	SUGGESTED REMEDY
If fan wobbles	6. The balancing kit should only be used if there is an unacceptable amount of fan wobble after completing all the steps: How to use balancing kit: (1) Turn the fan on and set the speed control setting to a speed at which the wobble is the greatest. (2) Turn off the fan and allow it to come to a complete stop. Select one blade and place the balance clip on it, halfway between the blade holder and the blade tip on the trailing edge of the blade. (3) Turn the fan on. Note whether the wobble has increased or decreased. Turn the fan off, move the clip to another blade, and retest. Repeat this procedure on all blades, noting the blade on which the greatest improvement is achieved. (4) Move the clip back to the blade that showed the greatest improvement. Move the clip inward and outward on this blade and operate the fan to find the position where the clip gives the greatest improvement. (5) Remove the clip and install a balancing weight to the top of the blade along the centerline, near the point where the clip was positioned. (6) If the fan wobble problem has not been corrected, you can try to improve the balancing further by using the balancing clip and additional weights. 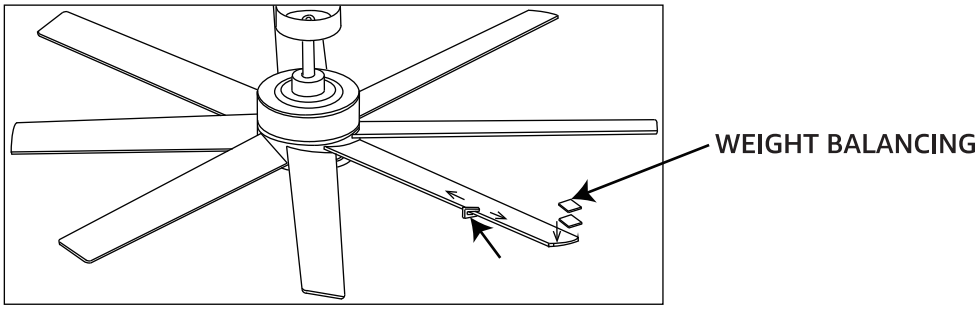
If light does not work or flickering	1. Check for loose or disconnected wires in fan switch housing. 2. Check the wiring of receiver to the light kit. 3. Check for loose or disconnected wires in light kit, make sure connector is correct inserted. 4. Check for faulty light bulbs. (*light bulb version only) 5. There is too many ceiling fans with different control system in the same area, shut down other ceiling fansto check if still flickering. 6. DO NOT USE any dimmer.

CUSTOMER SERVICE

30-Days Full Refund Guarantee

If you are not completely satisfied or the item isn't what you expected, just tell us within 30 days. We will give you a full refund unconditionally.

Friendly Reminder

It's better to contact us than leaving a negative shopping experience. Nothing is more important than your satisfaction, and we will do our best to serve you.

Quick Response Within 12 Hours

You can contact us without any hesitation at any time of the day, and we will reply to you within 12 hours. (It would be appreciated if you could provide us with a video or pictures, if available)

2-year Warranty

Your fan light comes with a two-year warranty. If a malfunction occurs due to product quality issues, we will assist in diagnosing the problem and provide replacement parts free of charge to ensure your fan light resumes normal operation.

CONTACT INFORMATION

: You can contact us by sending an email to support@fanlamppro.com