Kitchen Island Carts

Assembly Instructions - Please keep for future reference

N707P392494
N707P392495

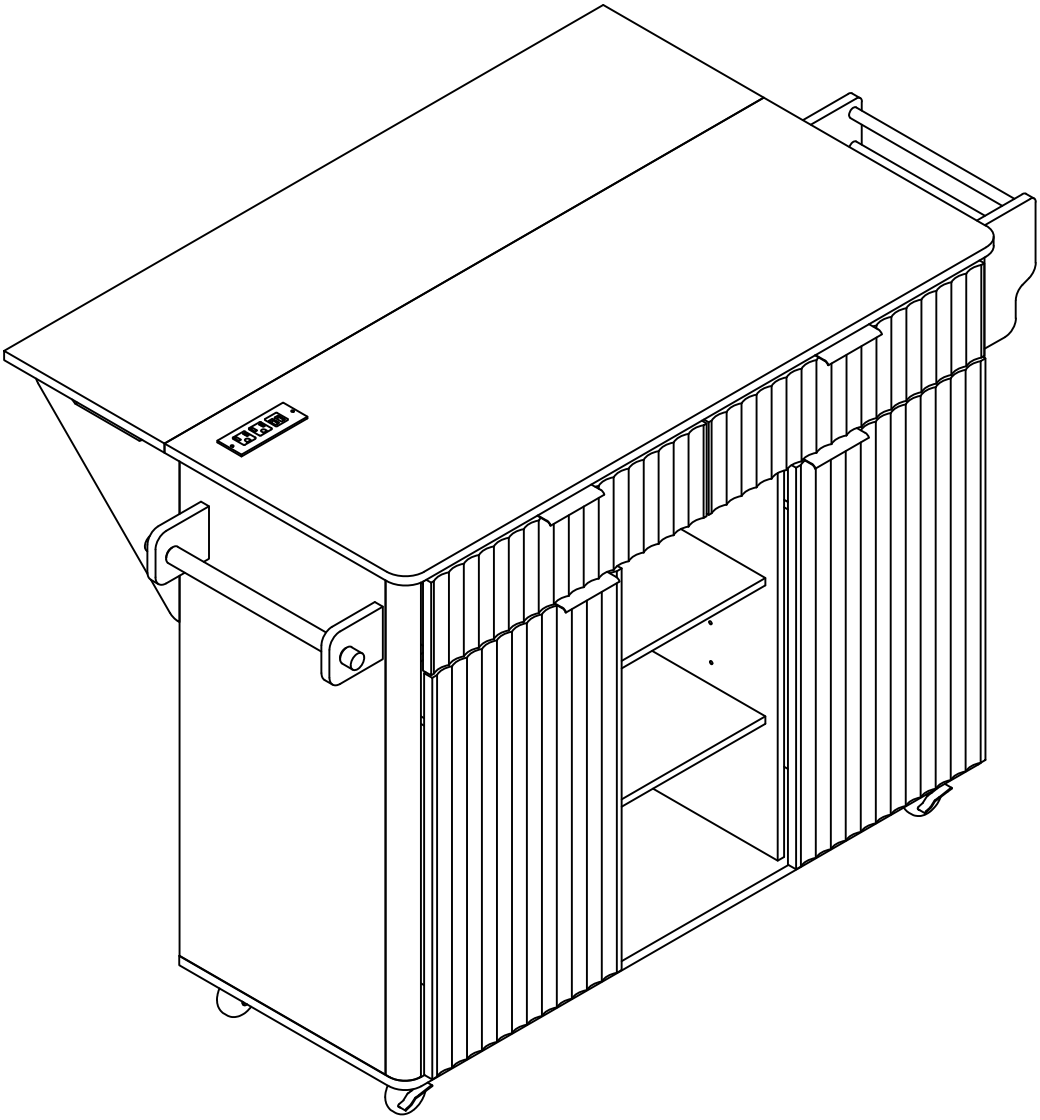

Important – Please read these instructions fully before starting assembly

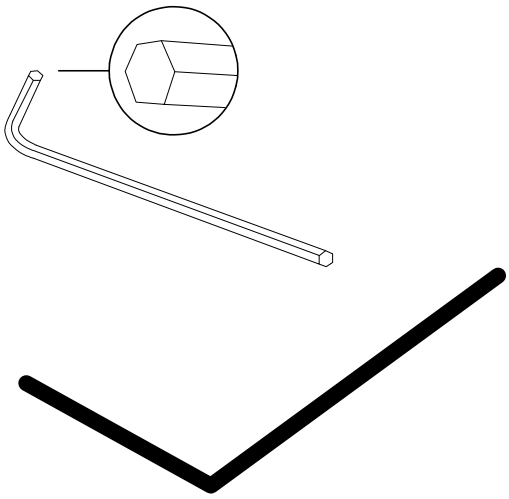

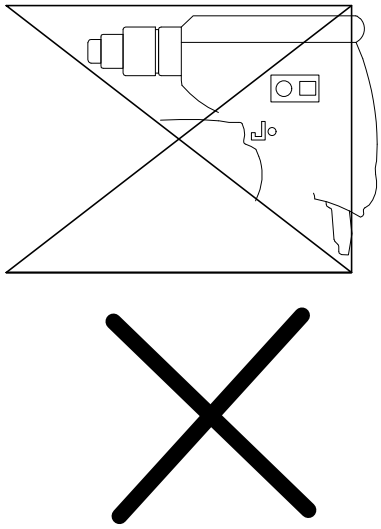

(DE): Verwenden Sie beim Anbringen der Tischplatte keinen Bohrer! Bitte verwenden Sie die im Paket enthaltenen Werkzeuge.

(UK): Do not use an electric drill when installing the desktop! Please use the tools provided in the package.

(FR): Ne pas utiliser de perceuse électrique lors de l'installation du plateau de table ! Veuillez utiliser les outils fournis dans l'emballage.

(IT): Non utilizzare un trapano elettrico durante l'installazione del piano del tavolo! Si prega di utilizzare gli strumenti forniti nella confezione.

(ES): ¡No utilice un taladro eléctrico al instalar el escritorio! Por favor, use las herramientas incluidas en el paquete.

(NL): Gebruik geen elektrische boormachine bij het monteren van het tafelblad! Gebruik de meegeleverde gereedschappen uit de verpakking.

(SE): Använd inte en elektrisk borrmaskin vid montering av bordsskivan! Använd de verktyg som medföljer i förpackningen.

(PL): Nie używaj wiertarki elektrycznej podczas montażu blatu! Użyj narzędzi dołączonych do opakowania.

Safety and Care Advice

Important – Please read these instructions fully before starting assembly

• Check you have all the components and tools listed on the following pages.

• Remove all fittings from the plastic bags and separate them into their groups.

• Keep children and animals away from the work area, small parts could choke if swallowed.

• Make sure you have enough space to layout the parts before starting.

• During assembly do not stand or put weight on the product, this could cause damage.

• Assemble the item as close to its final position (in the same room) as possible.

• Assemble on a soft level surface to avoid damaging the unit or your floor.

• Parts of the assembly will be easier with 2 people.

• To reduce the likelihood of damaging your product please ensure that your power drill is set on a low torque setting.

Care and maintenance

• Only clean using a damp cloth and mild detergent, do no use bleach or abrasive cleaners.

• From time to time check that there are no loose screws on this unit.

• This product should not be discarded with household waste. Take to your local authority waste disposal centre.

Handy Hints

• Assemble all parts and bolts loosely during assembly, only once the product is complete should you fully tighten the bolts

• Regularly check and ensure That all bolts and fittings are tightend properly.

WARNING
In order to help prevent overturning – please follow these instructions

To help prevent product toppling over please follow the below steps:-

Use the anti tip stap or wall fixing method provided (if applicable)
Do not allow children to climb or hang on the furniture
Do not open more than one drawer at a time
Do not place heavy items in the top drawers
Do not place heavy items on top of the furniture, unless the furniture has been designed for this purpose

Please note that only the anti tip strap is provided.
You will need to provide wall plugs and screws applicable for your wall type

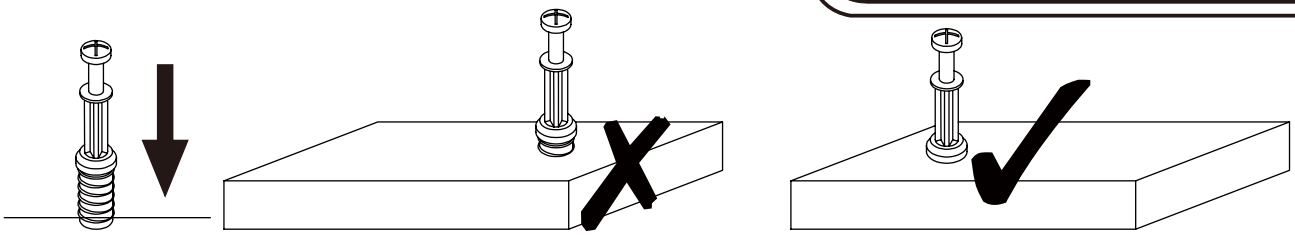

EN_QUICKFIT: Tighten quickfit until shoulder is flush with panel.Do not overtighten or undertighten.
FR_RACCORD RAPIDE:Faites serrer le raccord rapide jusqu'à ce que l'épaulement soit parfaitement encastré dans le panneau. Il ne faut ni trop serrer ni insuffisamment serrer.
ES_QUICKFIT:Apriete quickfit hasta que el hombre se descargue con el panel. NO lo sobreapriete ni lo apriete poco.
DE_QUICKFIT:Ziehen Sie den Quickfit fest, bis die Schulter mit der Platte bündig ist. Bitte nicht zu fest oder zu schwach anziehen.
IT_MONTAGGIO RAPIDO:Stringere il montaggio rapido fino a quando la spalla è a filo con il pannello, non stringere troppo o troppo poco.

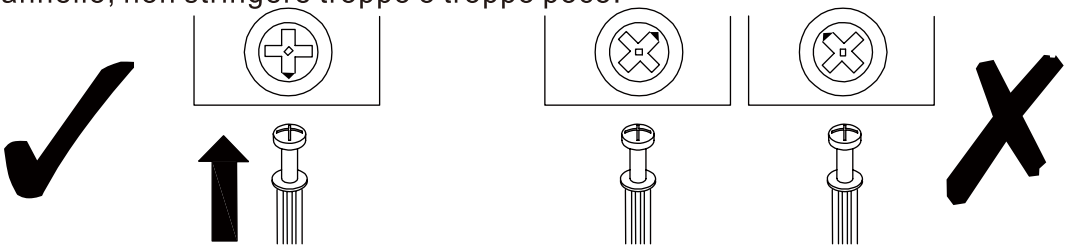

EN_CAM LOCK: When fitting cam lock, ensure starting position is correct before you insert connecting quickfit.
FR_SERRURE BATTEUSE:Avant d'insérer la serrure batteuse, veillez à la bonne orientation avant d'insérer le raccord rapide.
ES_CIERRE DE LA CÁMARA:Cuando instale el cierre de la cámara, asegúrese de que la posición de inicio es correcta antes de que inserte el quickfit conector.
DE_CAM-LOCK:Achten Sie bei der Montage des Cam-Locks auf die richtige Ausgangsposition, bevor Sie den Quickfit einsetzen.
IT_BLOCCAGGIO A CAMMA:Quando si monta il bloccaggio a camma, assicurarsi che la posizione iniziale sia corretta prima di inserire il montaggio rapido di collegamento.

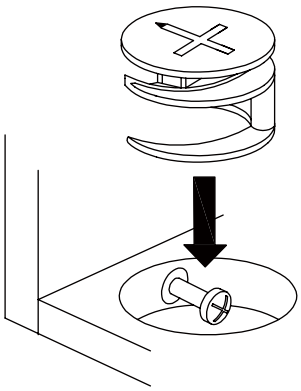

EN_ Quickfit head should be in the centre of the cam lock when the two panels are joined.
Cam lock should be inserted before quickfit.
FR_ Lorsque les deux panneaux sont assemblés, la tête du raccord rapide doit reposer au centre de la serrure batteuse.
Il faut insérer la serrure batteuse avant le raccord rapide.
ES_ El cabezal del quickfit debe estar en el centro del cierre de la cámara cuando se unan los dos paneles.
Se debe insertar el cierre de la cámara antes que el quickfit.
DE_ Der Quickfit-Kopf sollte sich in der Mitte des Cam-Locks befinden, wenn die beiden Platten zusammengefügt sind.
Der Cam-Lock sollte vor dem Quickfit eingesetzt werden.
IT_ La testa del montaggio rapido deve trovarsi al centro del bloccaggio a camma quando i due pannelli sono uniti.
Il Bloccaggio a Camma deve essere inserito prima del montaggio rapido.

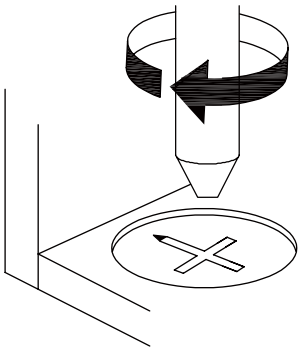

EN_ Turn cam lock clockwise to tighten.
FR_ Faites tourner la serrure batteuse dans le sens des aiguilles d'une montre pour la resserrer.
ES_ Gire el cierre de la cámara en sentido horario para apretarlo.
DE_ Drehen Sie den Cam-Lock im Uhrzeigersinn, um ihn festzuziehen.
IT_ Ruotare il bloccaggio a camma in senso orario per stringere.

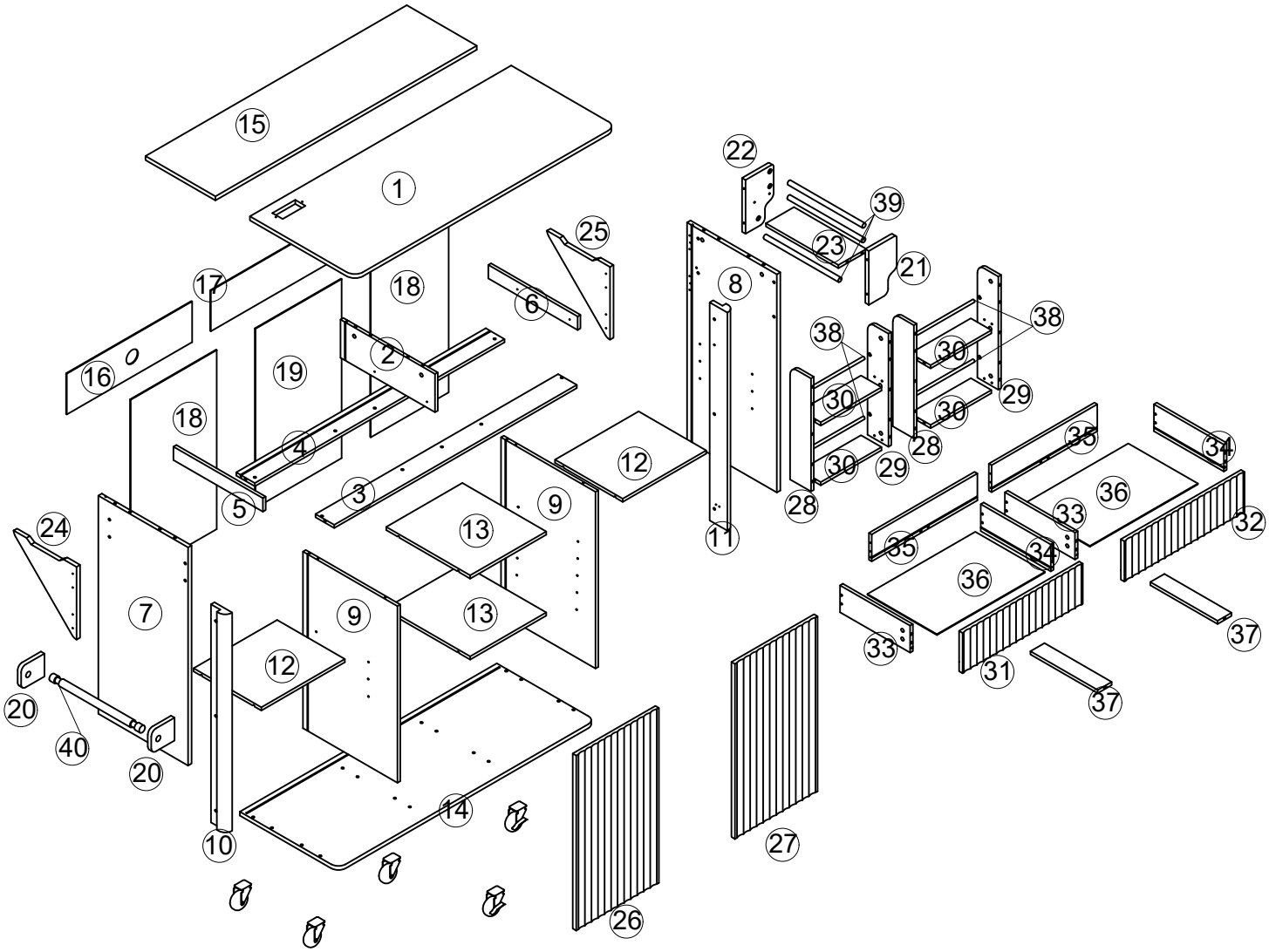
15
1
22
39
23
21
25
17
18
6
8
38
38
30
16
19
2
30
29
18
30
4
28
35
34
12
30
29
3
5
9
28
36
24
13
11
33
32
35
34
36
7
9
13
12
33
31
37
37
20
40
20
14
10
27
26

BOX:1/2
N707P392494

1 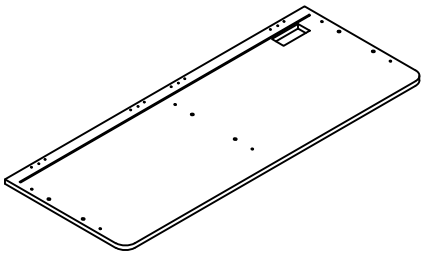 1	14 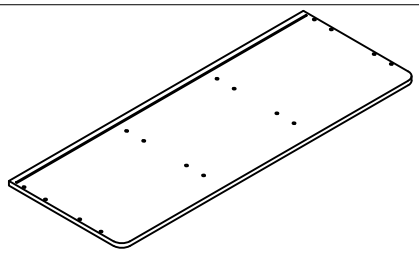 1
2 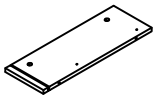 1	15 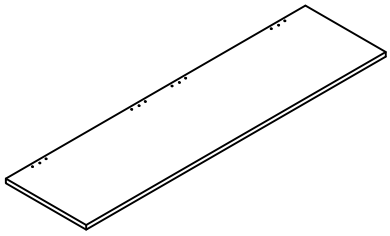 1
3 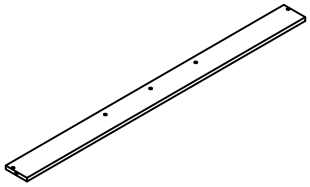 1	16 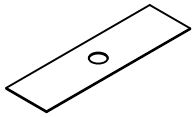 1
4 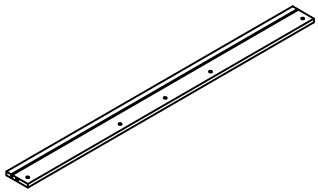 1	17 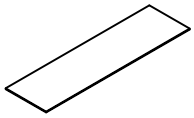 1
5 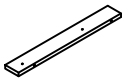 1	23 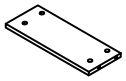 1
6 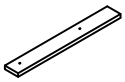 1	28 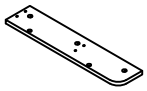 2
9 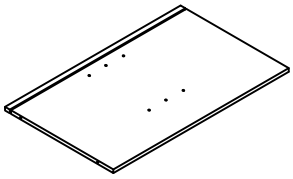 2	29 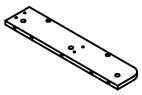 2

BOX:1/2
N707P392494

30 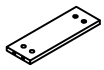 4	37 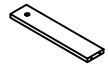 2
33 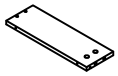 2	38 4
34 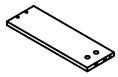 2	39 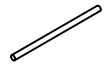 3
35 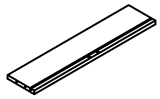 2	40 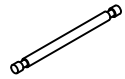 1
36 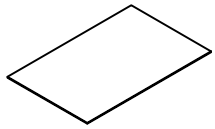 2.	

BOX:2/2
N707P392495

7 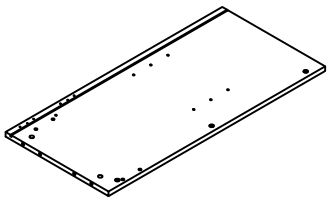 1	19 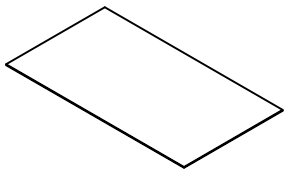 1.
8 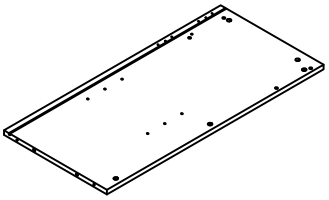 1.	20 2
10 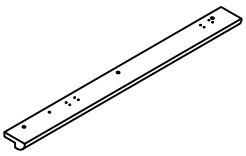 1.	21 1
13 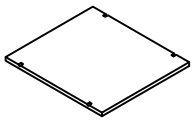 2	22 1
12 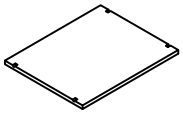 2	24 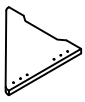 1.
11 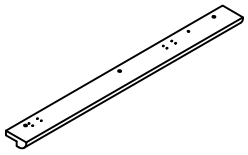 1	25 1.
18 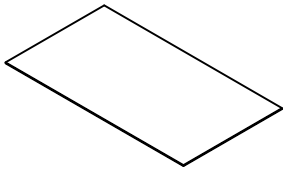 2	26 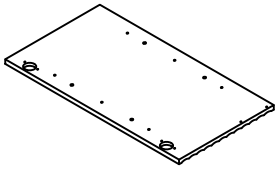 1

BOX:2/2
N707P392495

27 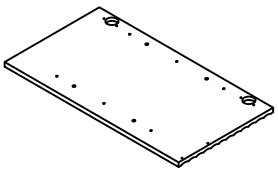 1	32 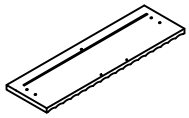 1
31 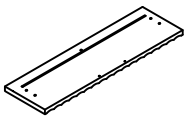 1.	

Components - Fittings

Please check you have all the parts listed below

Note:The quantities below are the correct amount to complete the assembly. In some cases more fittings may be supplied than are required.

BOX:1/2 N707P392494

A ST x52	B φ12 x52	C M3.5*12mm x100	D M6*40mm x26
E E1 x3 E2 x2	F φ8 x22	G M4*35mm x12	H M6*23mm x6
I x4	J x1	K x8	L x4
M M6*10mm x20	N x8	DL x2	DR x2
CL x2	CR x2		

Step 1

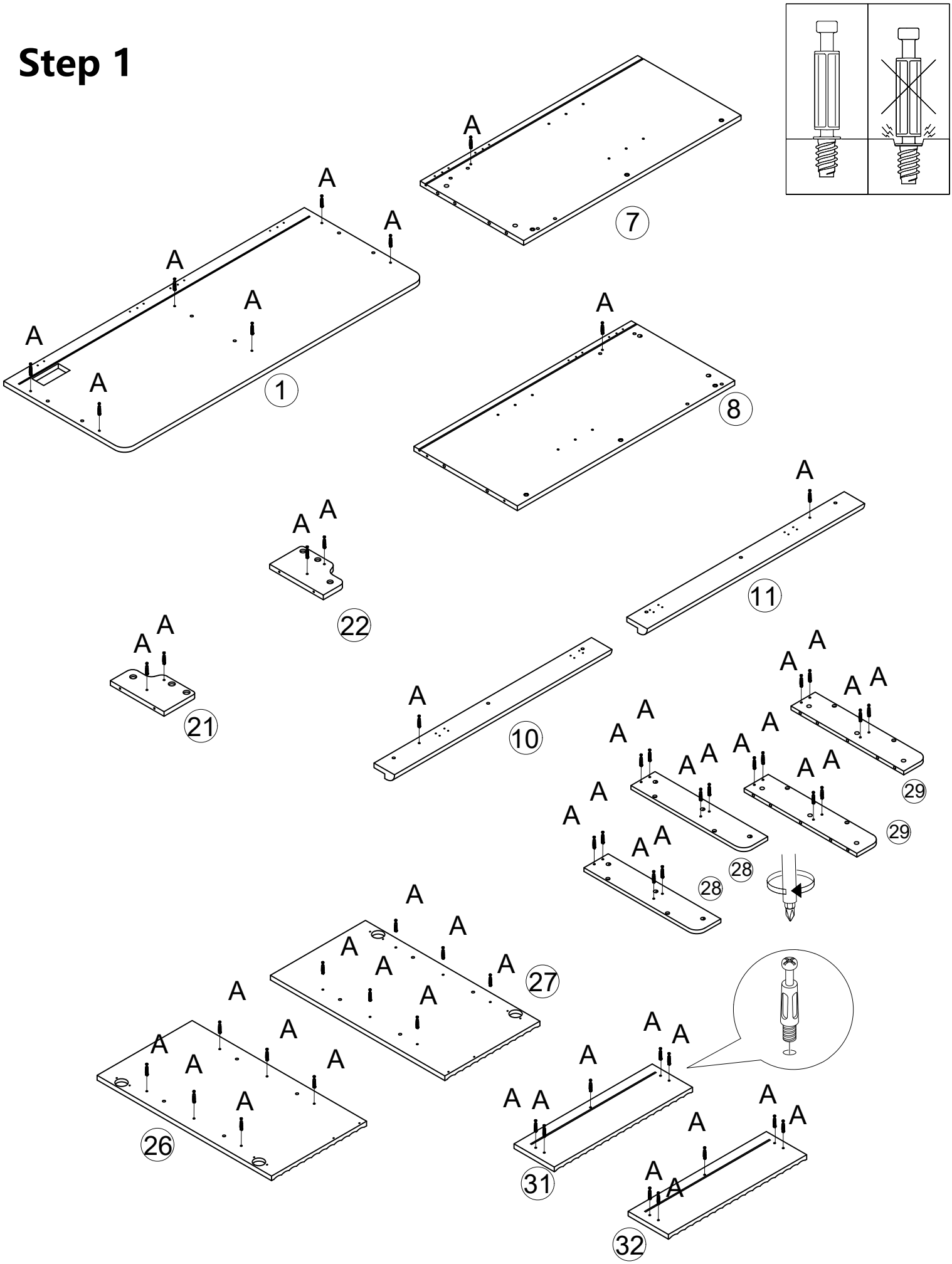

A X52

Step 2

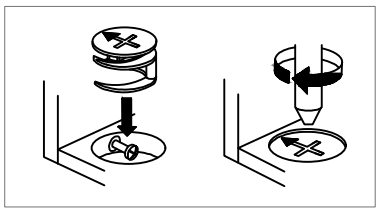

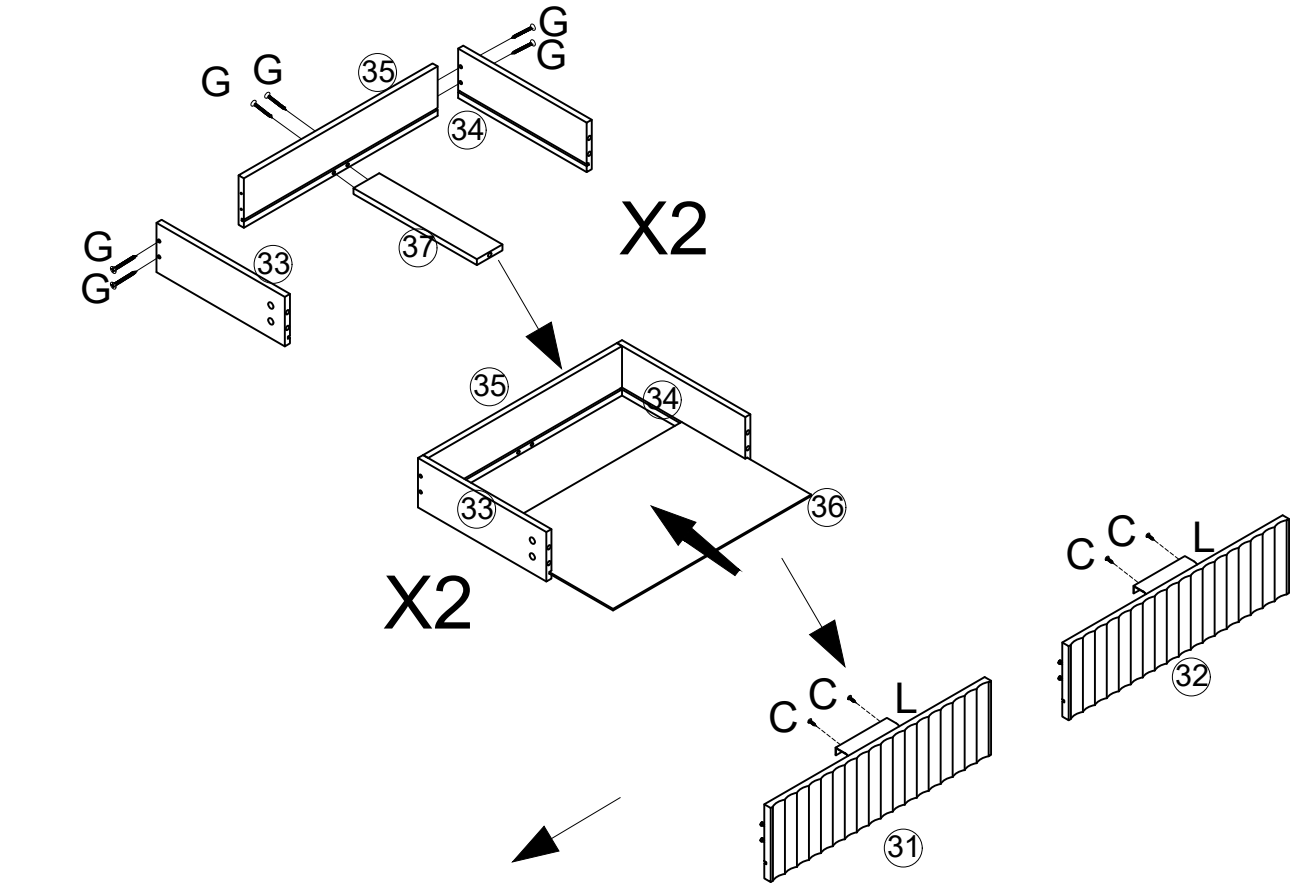

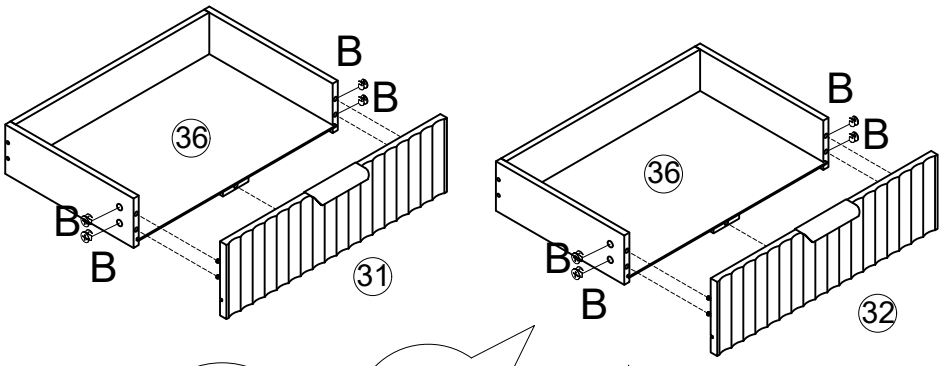

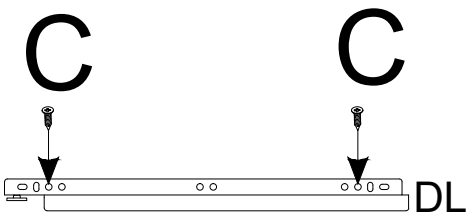

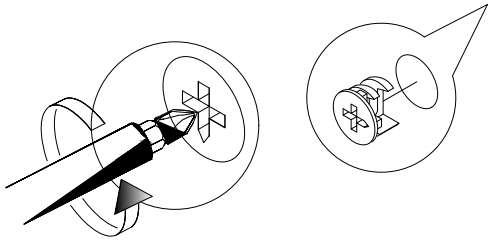

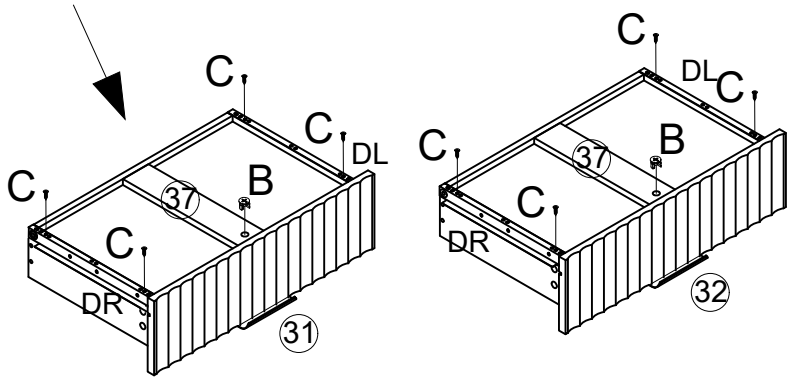

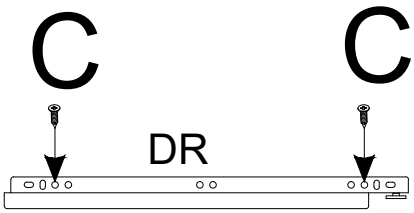

B X10	DL x2	DR x2	C X12	G X12	L X2

Step 3

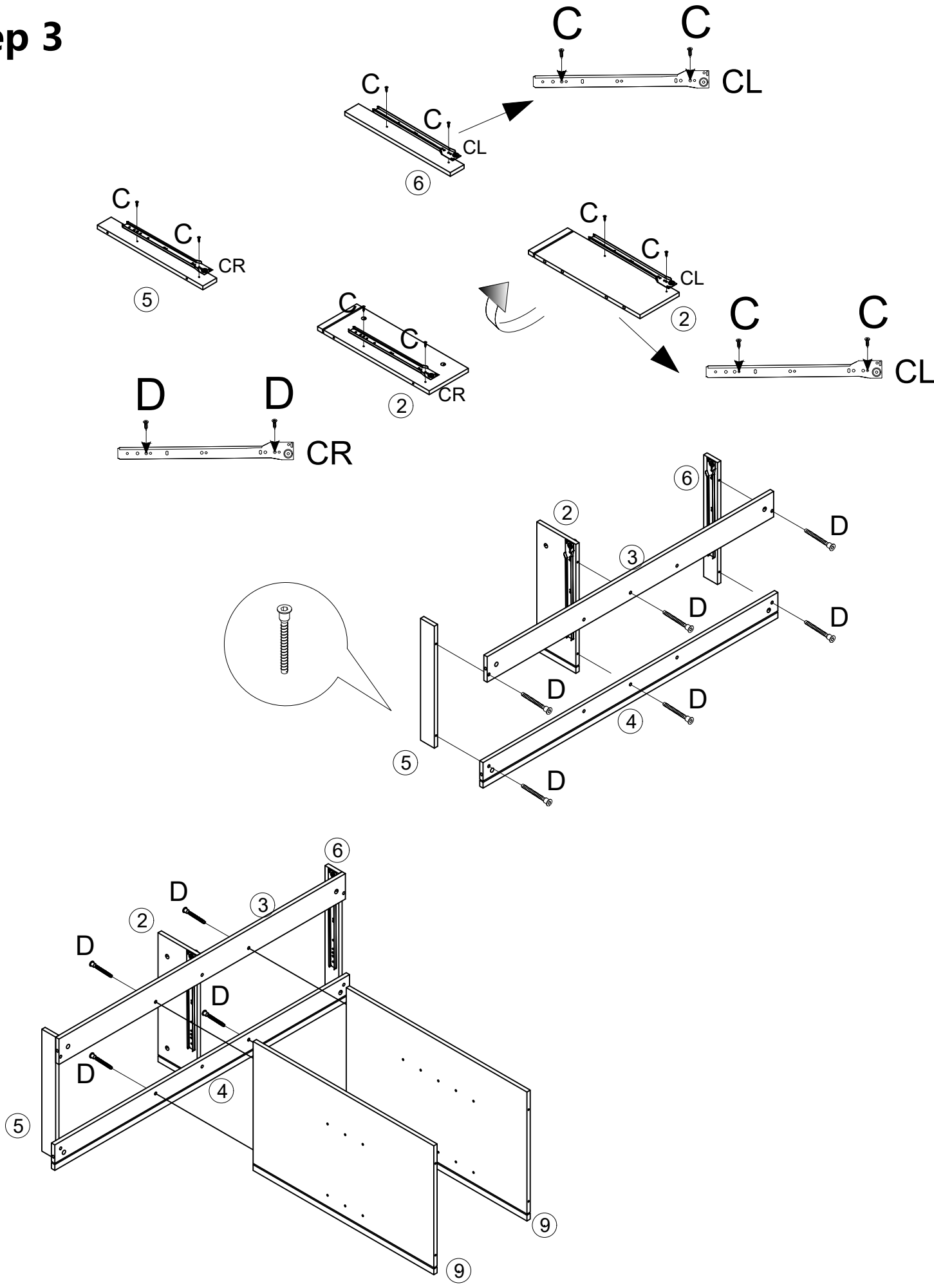

D X10	CL x2	CR x2	C X12

Step 4

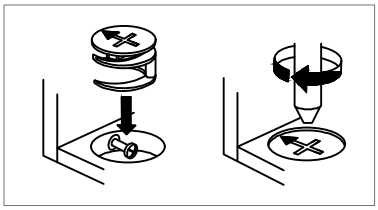

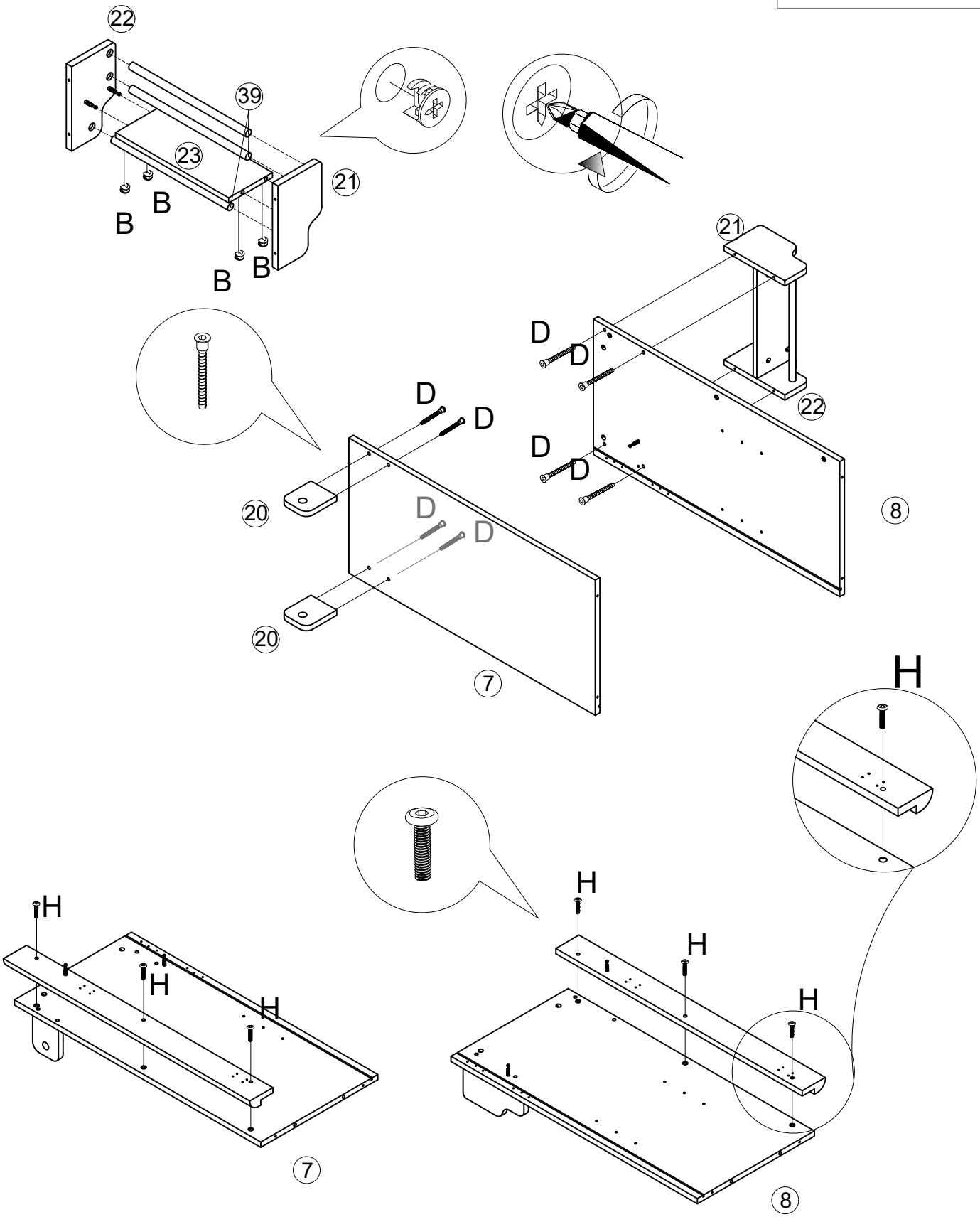

B	X4	D	X8	H	X6

Step 5

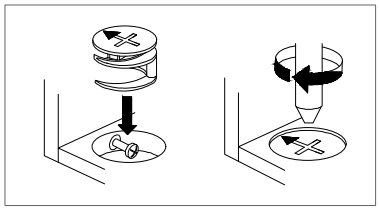

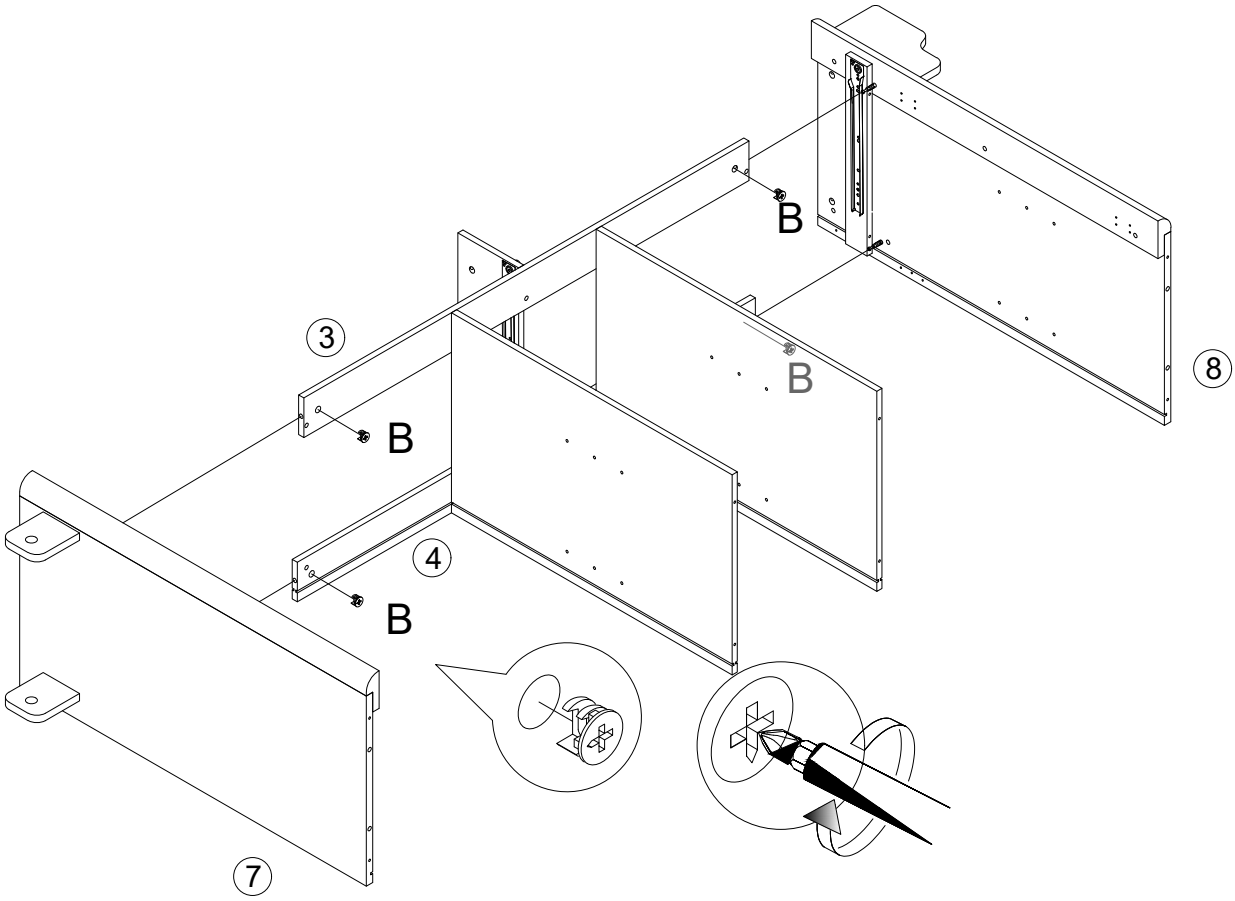

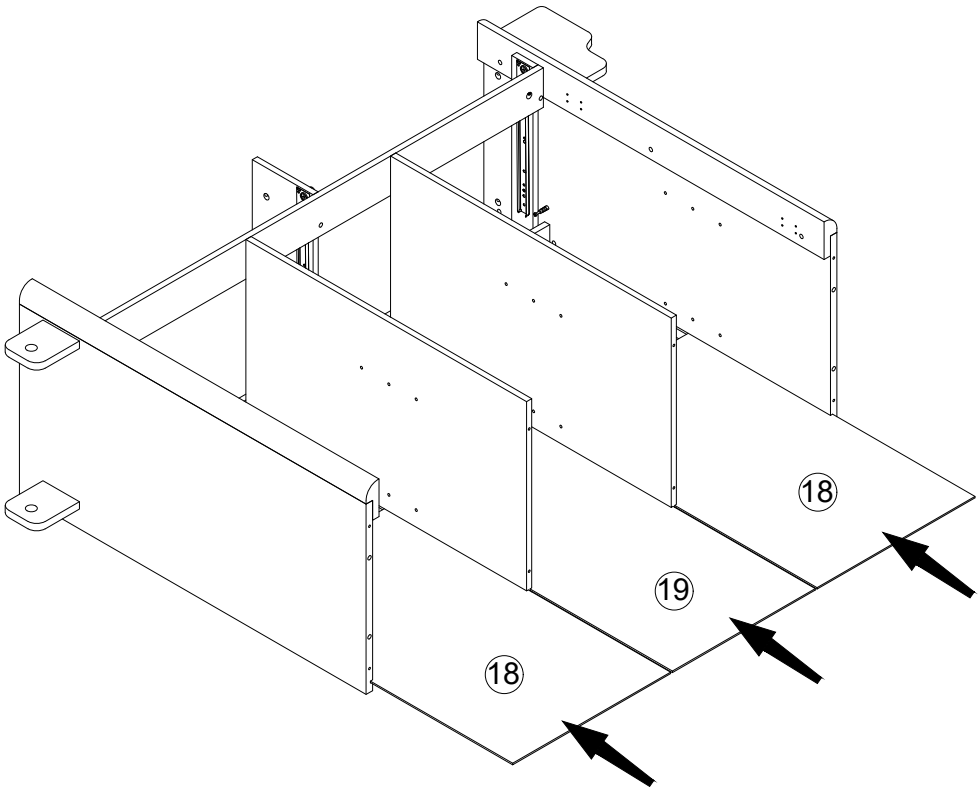

B X4

Step 6

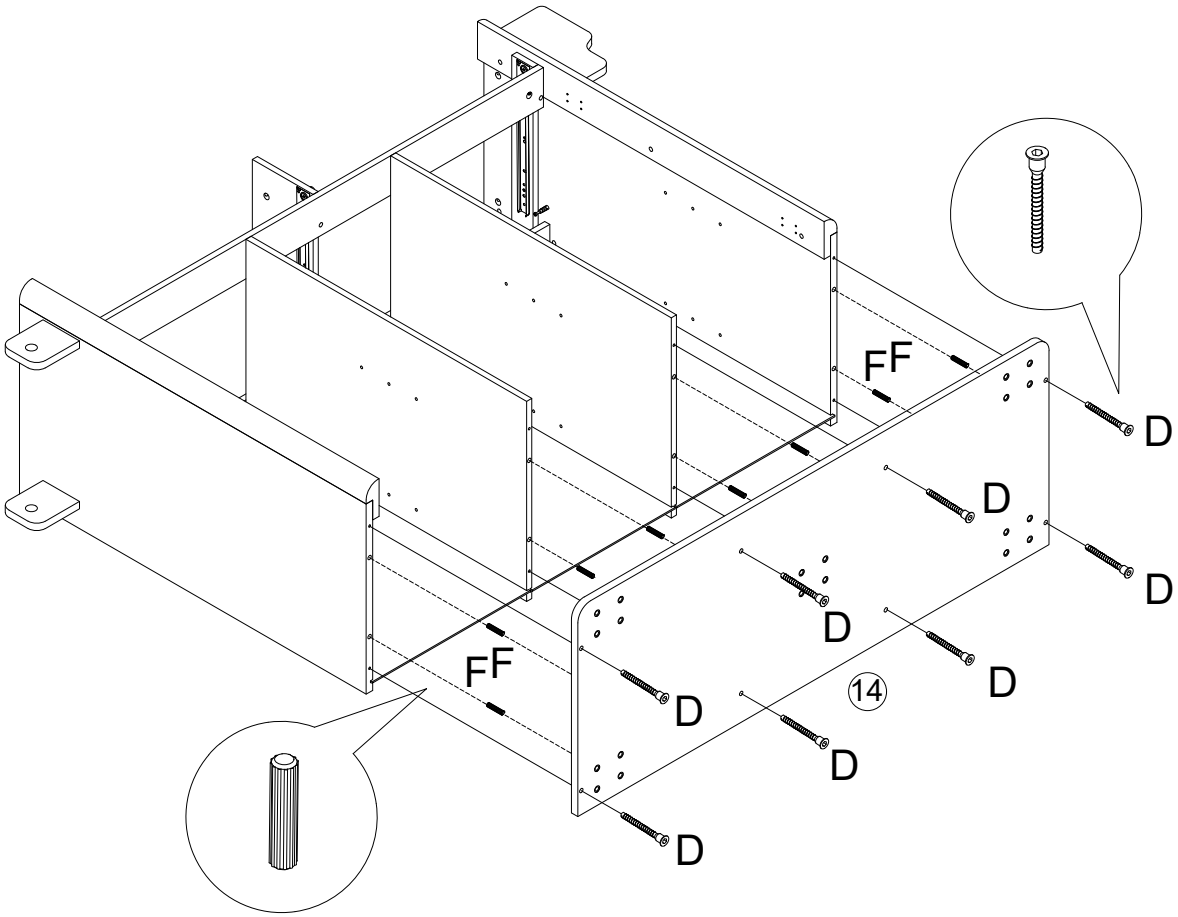

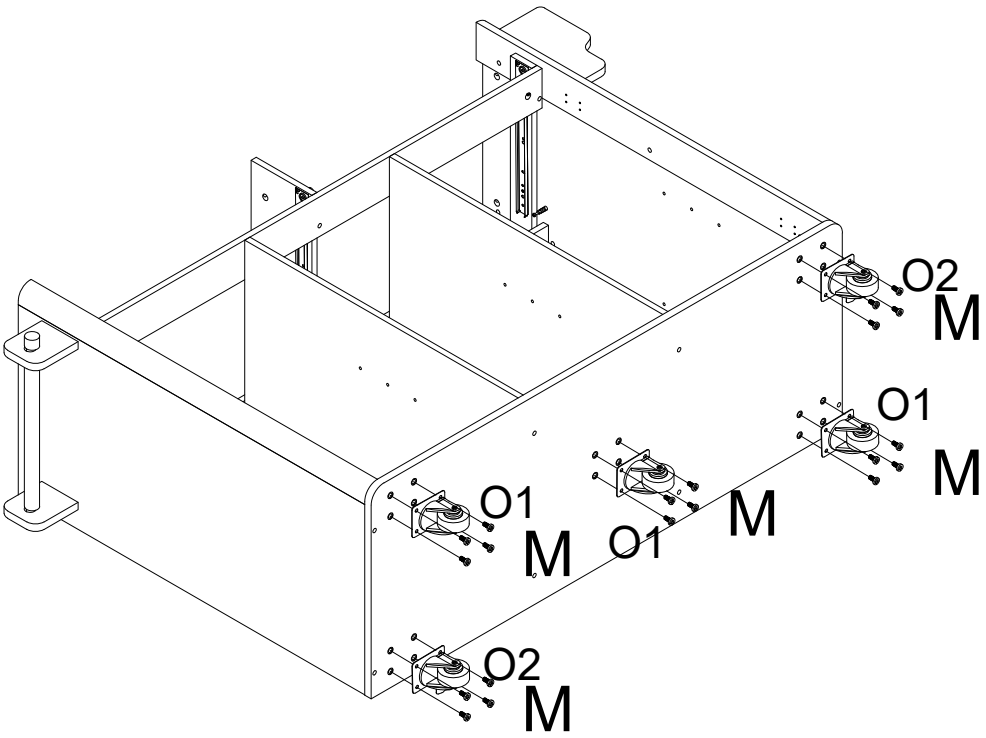

D		X8	F		X4	M		X20	O O1 O2 X5

Step 7

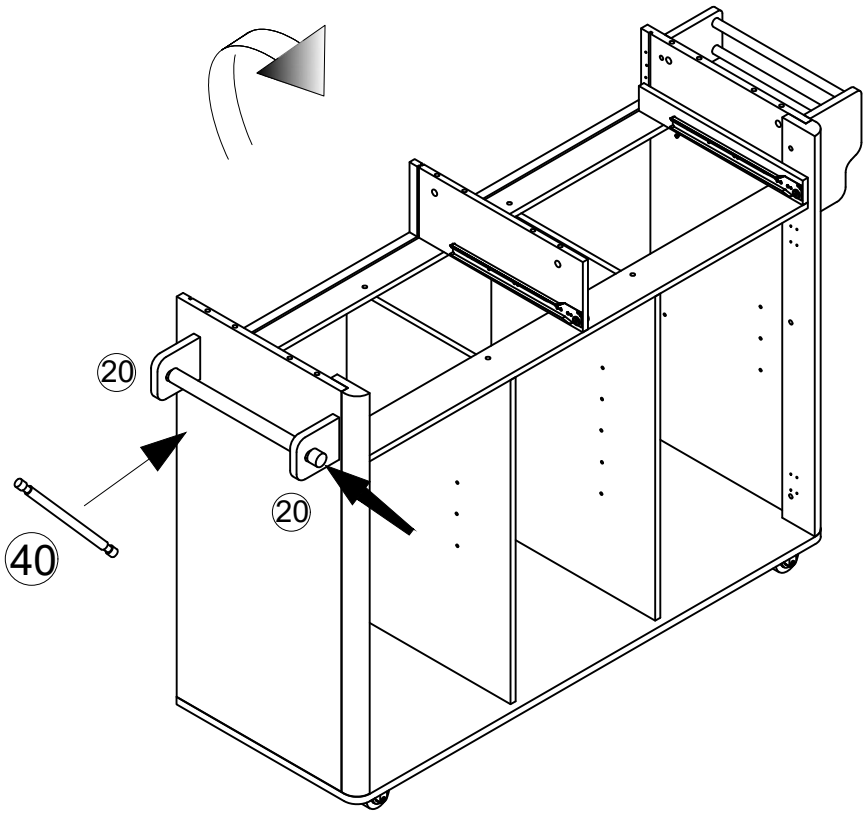

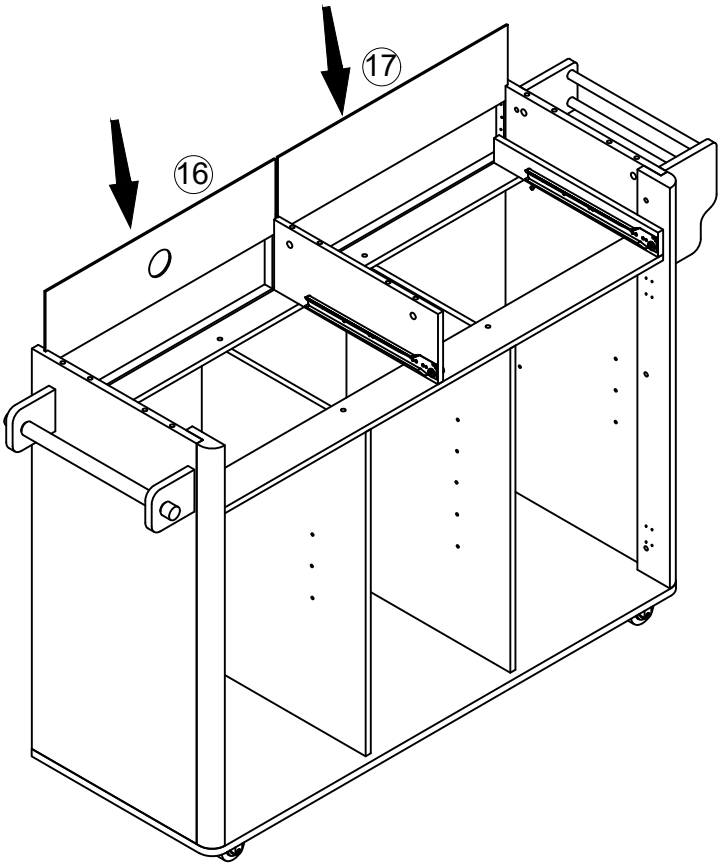

Step 8

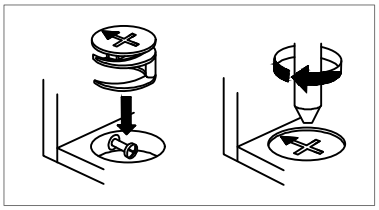

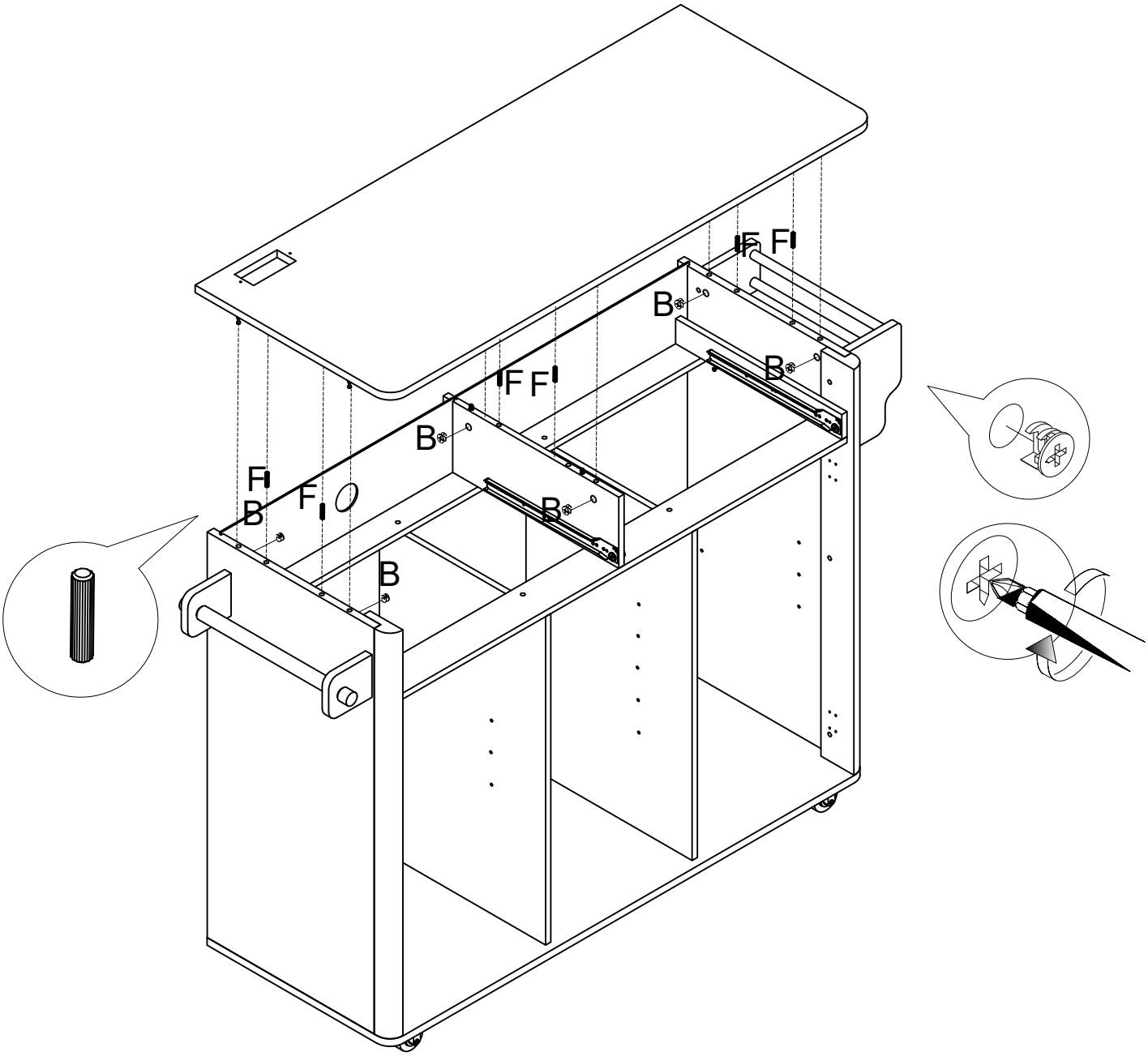

B	X6	F	X6

Step 9

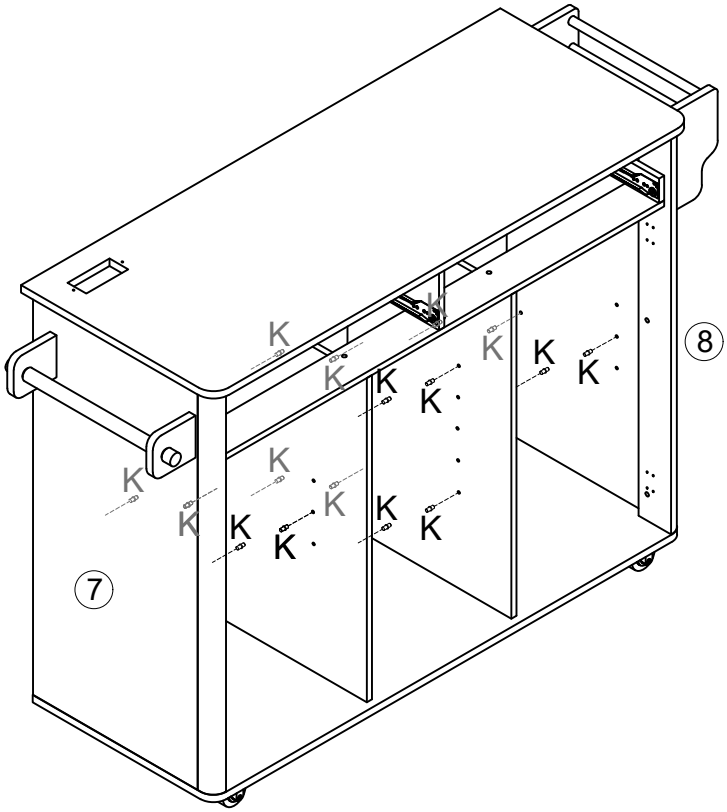

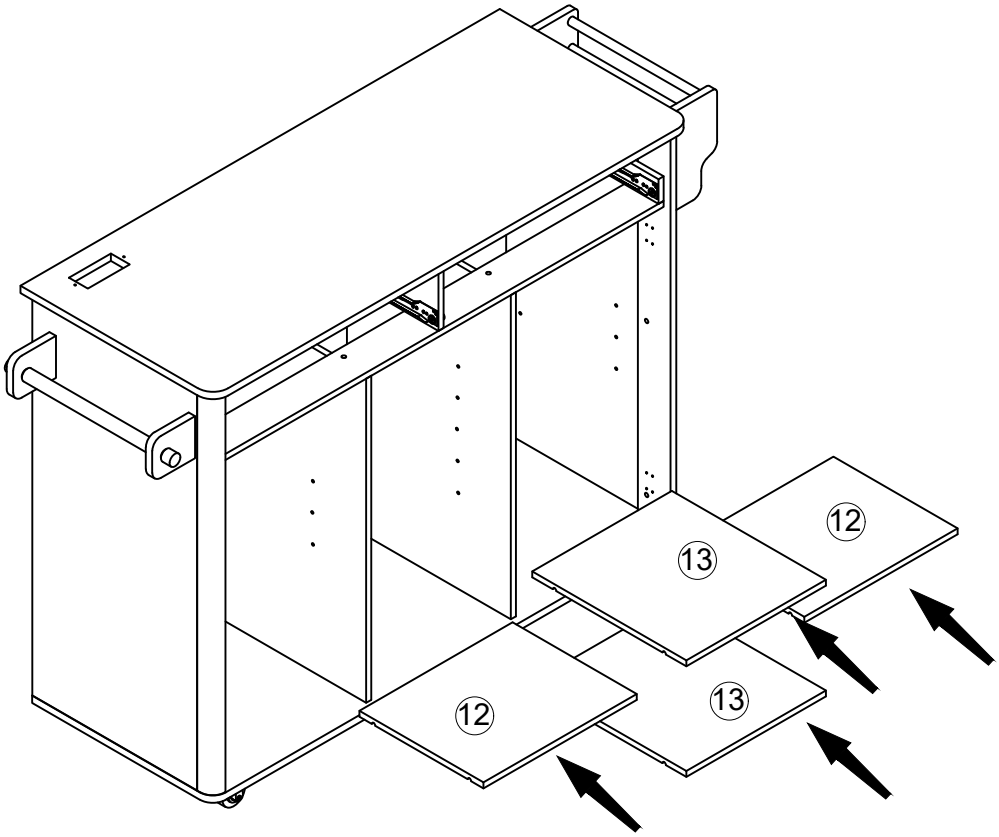

K X16

Step 10

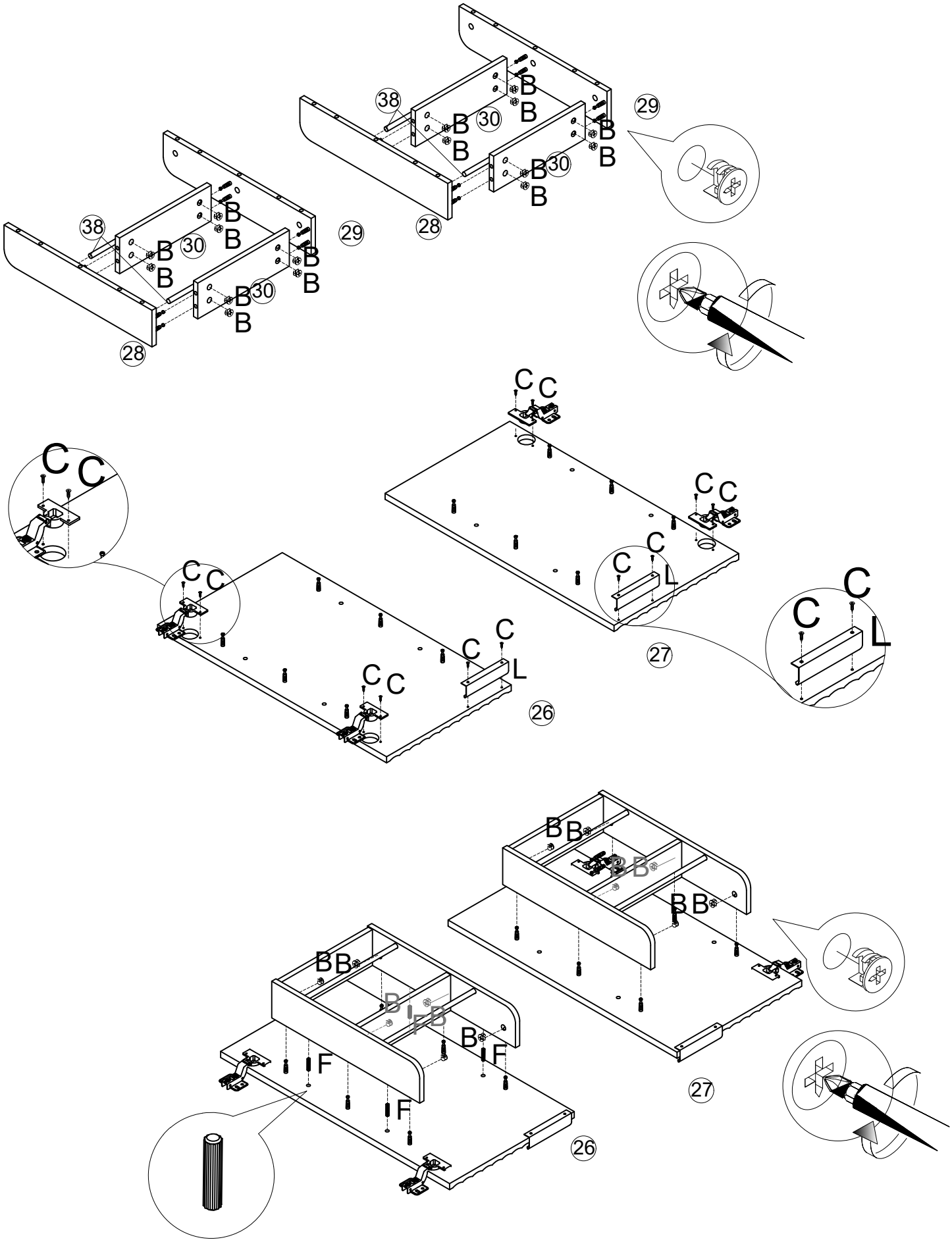

B	X28	C	X12	F	X8	I	X4	L	X2

Step 11

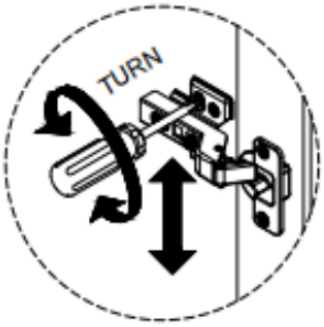

Loosen this screw and push up/down for a slight up-down adjustment of the door.

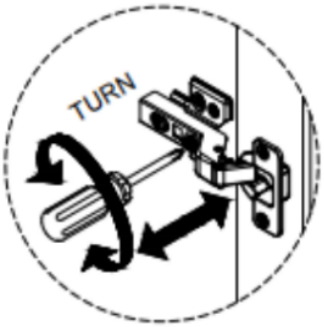

Loosen this screw for a slight left-right adjustment of the door.

Loosen this screw and push forward/backward for a slight front-back adjustment of the door.

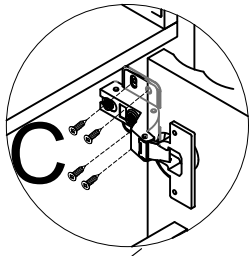

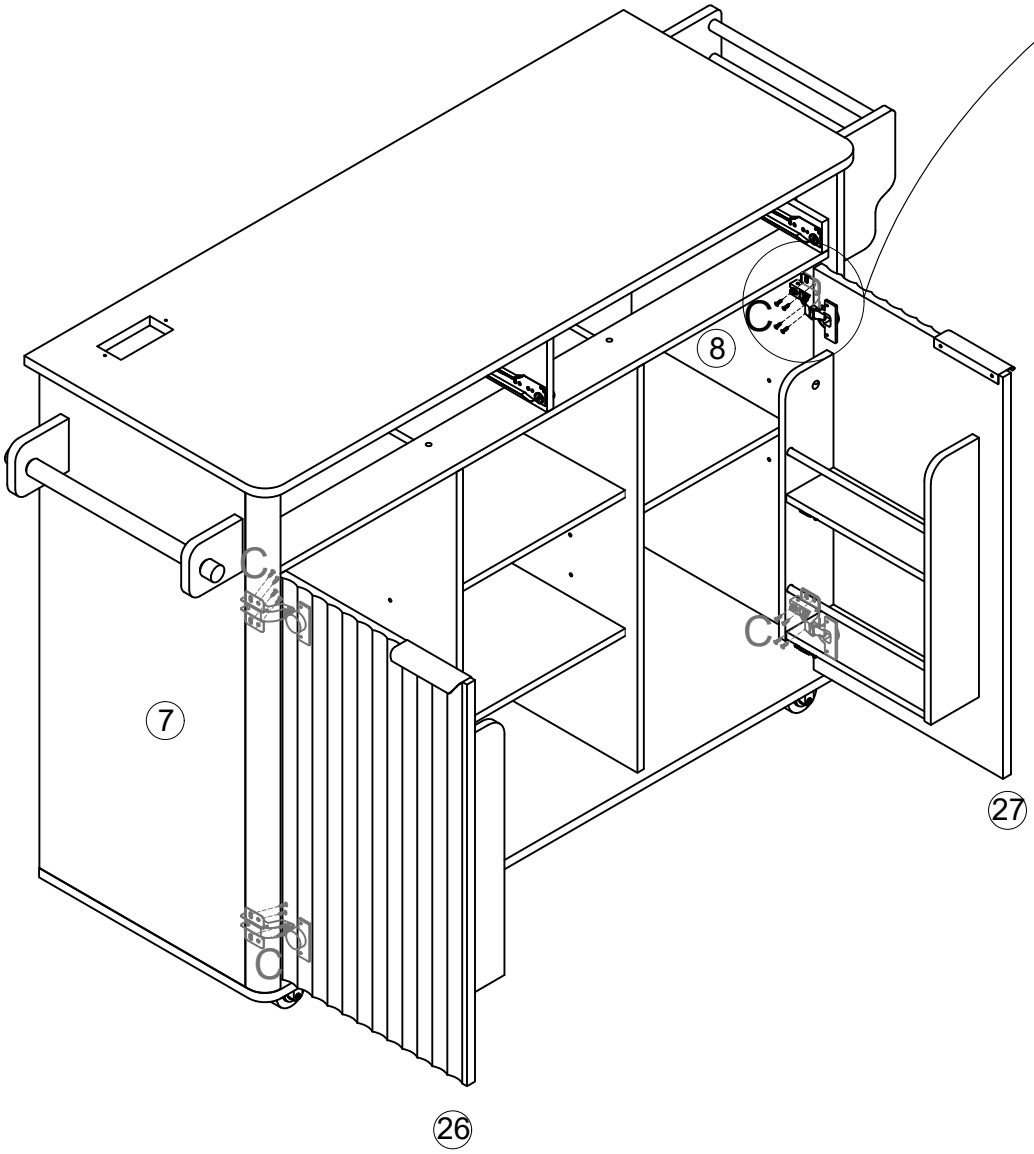

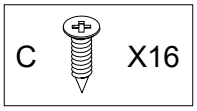

Step 12

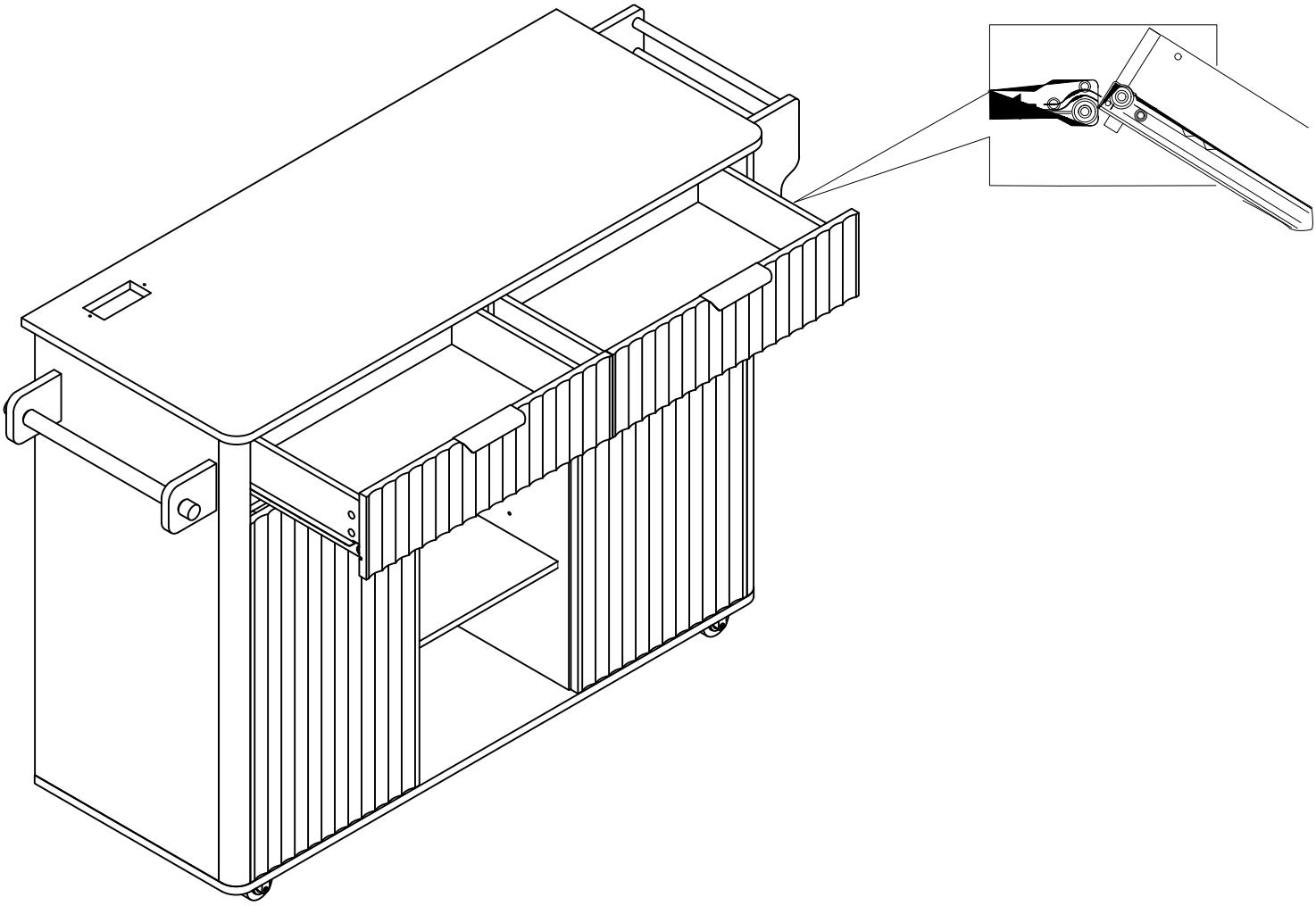

Step 13

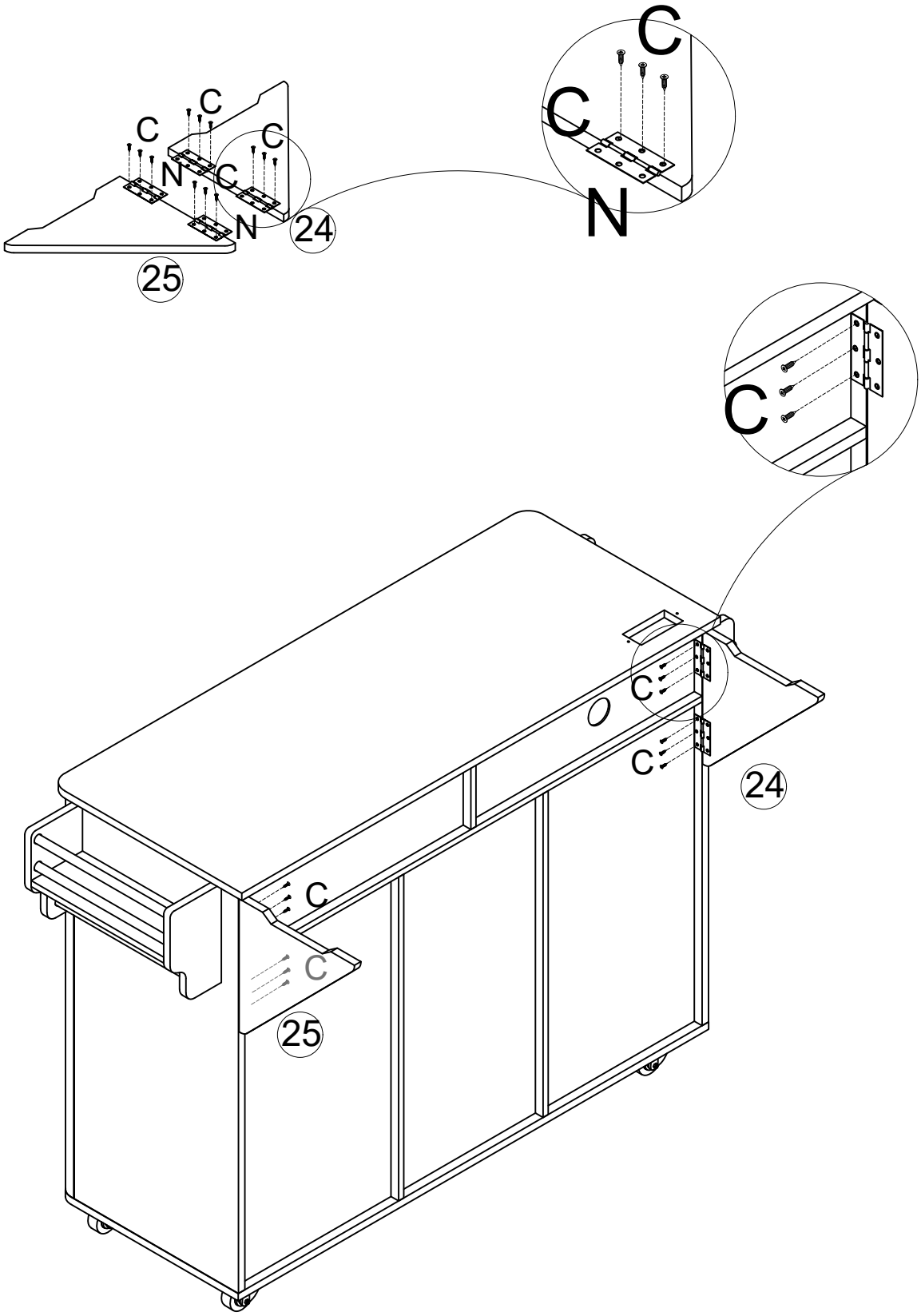

C	X24	N	X4

Step 14

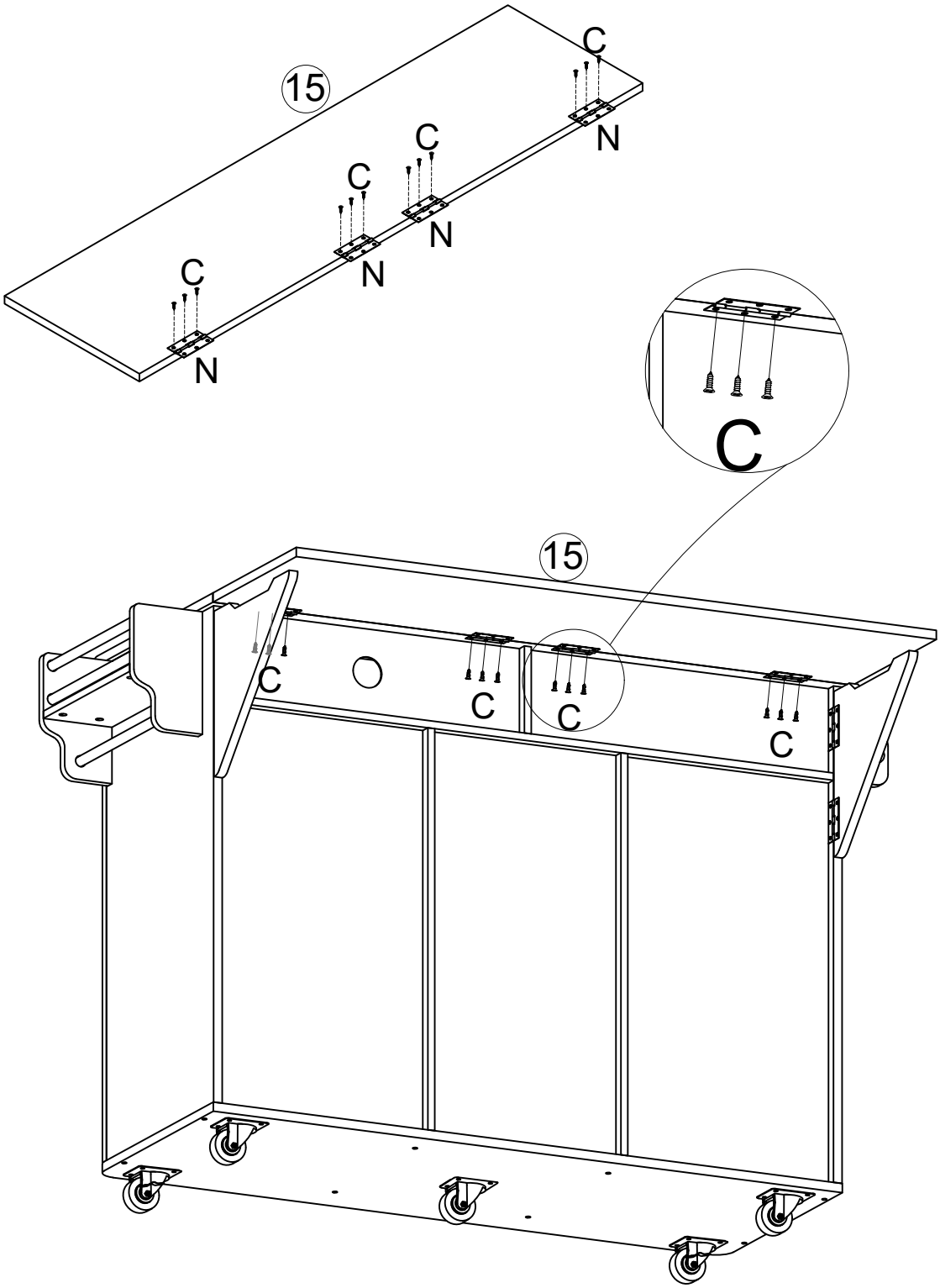

C	X24	N	X4

Step 15

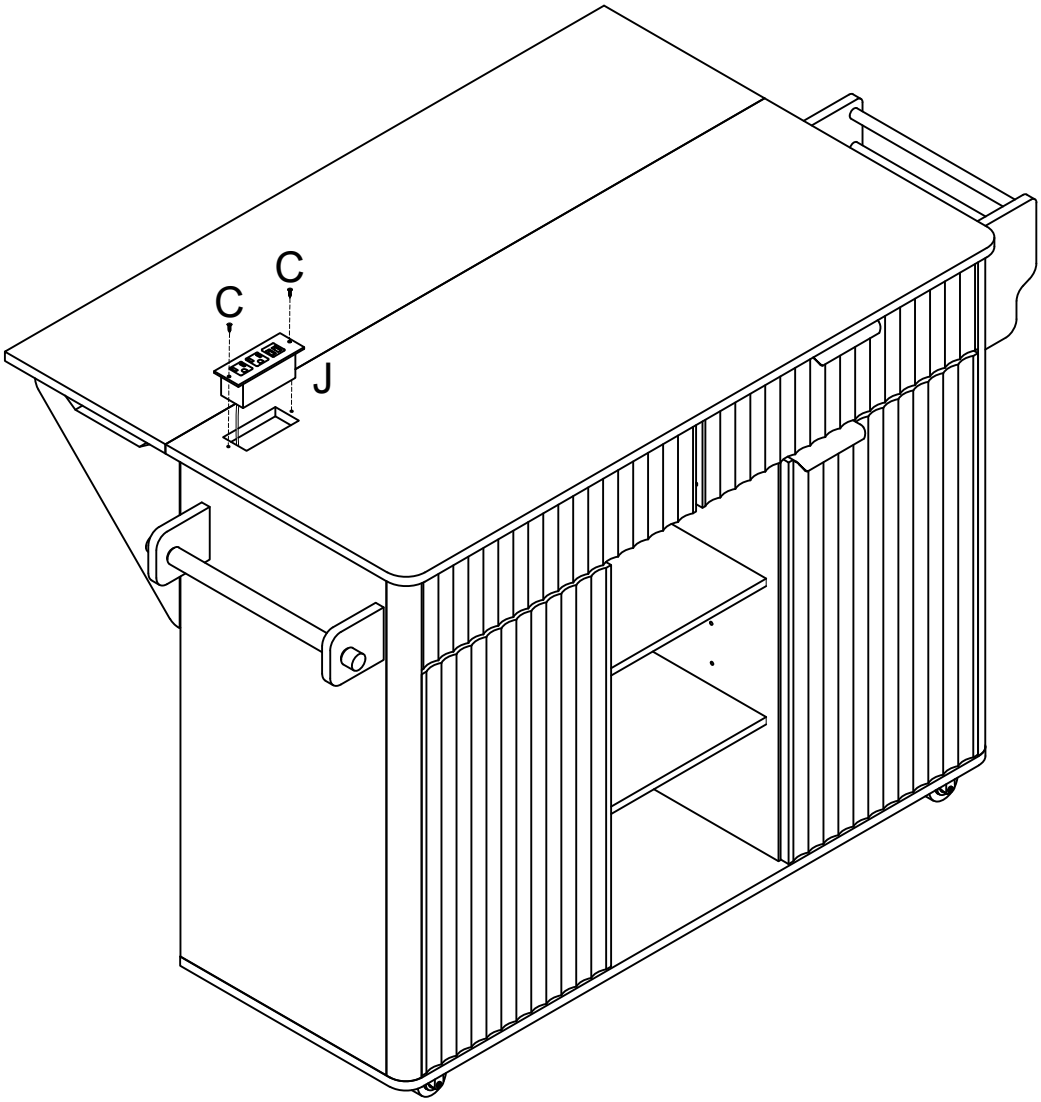

J X1
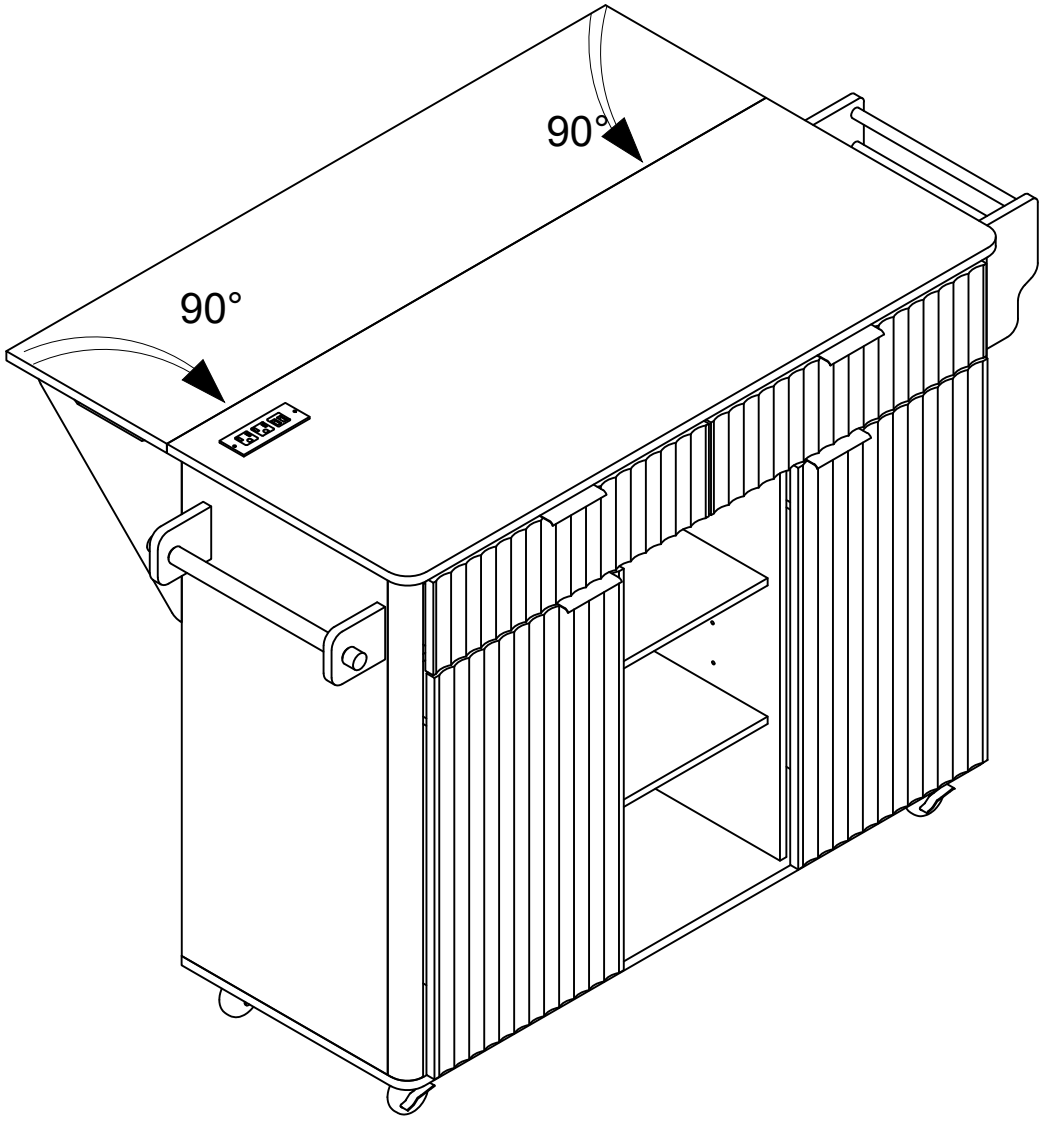
Step 16