PRODUCT SPECIFICATION

Model: QU-810

Series	Quartz QU Series
Material	80% quartz / 20% acrylic resin
Installation Type	Undermount
Configuration	Double equal bowl
Finish	Matte finish
Overall Dimensions	32 3/8" x 19 1/4" x 9 5/8"
Bowl Dimensions	14 1/4" x 16 3/4" x 9"
Drain Size	3 5/8"
Colors Available	Bisque, Concrete, White, Black, Grey, Brown
Minimum cabinet size	36"
Template Included	Yes
Clips Included	Yes
Heat Safe	Up to 535°F
Resistant to	Stain, scratch, abrasion, impact
Drain Locations	Rear

Shown in Grey



Stocked Color Options



BISQUE - BI

CONCRETE - CN

WHITE -WH

BLACK - BL

GREY - GR

BROWN - BR

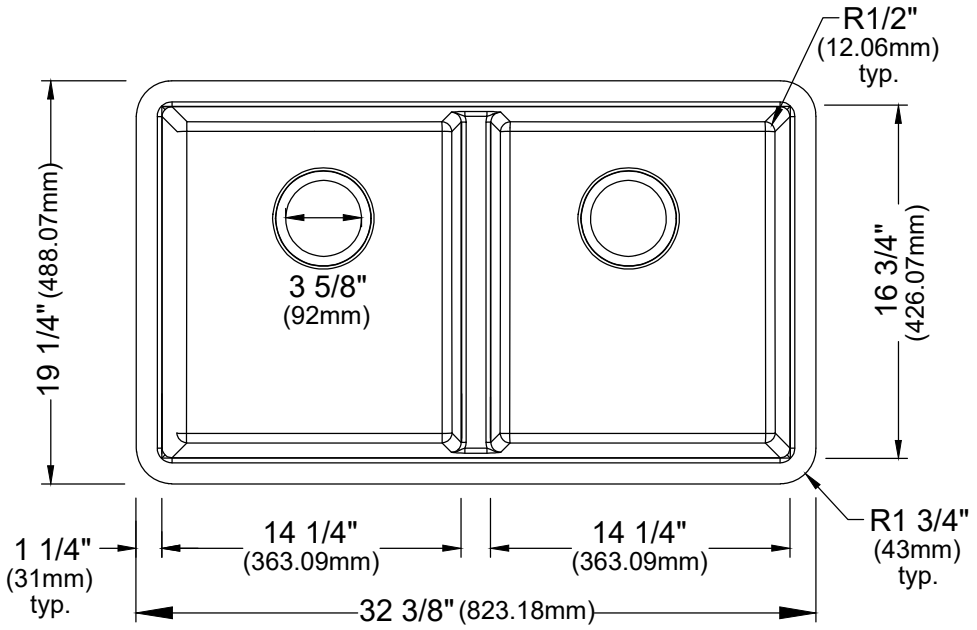

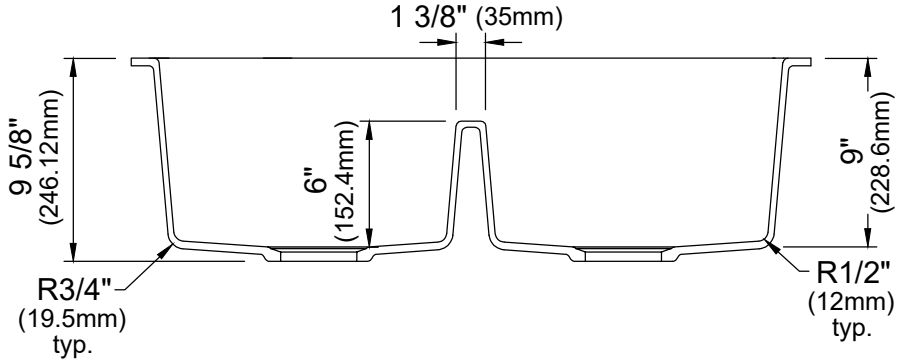

Listing and certifications:
cUPC

Limited lifetime warranty

We reserve the right to update product specifications without notice. Please visit karran.com for the most current specification sheets. All dimensions are accurate to 1/4". REV 06-2025