KOHLER®

Wellworth®

Class Five® Toilet

K-3947-U

Features

- Two-piece toilet.
- Round-front bowl offers an ideal solution for smaller baths and powder rooms.
- 1.28 gallons per flush (gpf).
- Standard left-hand trip lever included.
- Insuliner® tank liner minimizes condensation on the tank when exposed to high humidity.
- Combination consists of the K-4841-U tank and the K-4197 bowl.
- Coordinates with other products in the Wellworth collection.

Technology

- Single-flush gravity uses the force of gravity and a precision-engineered tank, bowl, and trapway to create a strong siphon during flushing.
- KOHLER's canister flush valve harnesses the natural force of gravity and optimizes flushing performance.
- Class Five® flushing technology offers virtually plug-free performance and rinsing power for a clean bowl.

Installation

- 14-inch rough-in.
- Three-bolt installation.
- Seat and supply line not included.

Water Conservation & Rebates

- WaterSense® toilets meet strict EPA flushing guidelines, including using at least 20 percent less water than 1.6-gallon toilets.
- Eligible for consumer rebates in some municipalities.
- This product meets water savings requirements for California Energy Commission (CEC), CALGreen, and Colorado SB 14-103.

Recommended Accessories

K-4639 Cachet® Quiet-Close™ Round-Front Toilet Seat
K-5589 Purefresh® Round-Front Toilet Seat
K-76923 Puretide™ Quiet-Close™ Round-Front Manual Cleansing Toilet Seat
K-5420 Low-Profile Bolt Caps
K-9379 Trip Lever
1023457 Wax Ring/Hardware Kit
1265114 Connector Hose

Components

Product includes:

K-4197 Round-Front Bowl
K-4841-U Toilet Tank
Additional included component/s: Tank cover, Trip lever, Bolt cap accessory pack, and Tank accessory pack.

WaterSense Meets EPA Criteria
Certified by IAPMO R&T

Codes/Standards

ASME A112.19.2/CSA B45.1
DOE - Energy Policy Act 1992
EPA WaterSense®
California Energy Commission (CEC)

KOHLER® One-Year Limited Warranty

See website for detailed warranty information.

Available Color/Finishes

Color tiles intended for reference only.

Color	Code	Description
	0	White
	96	Biscuit
	47	Almond
	7	Black Black™

Wellworth®

Class Five® Toilet

K-3947-U

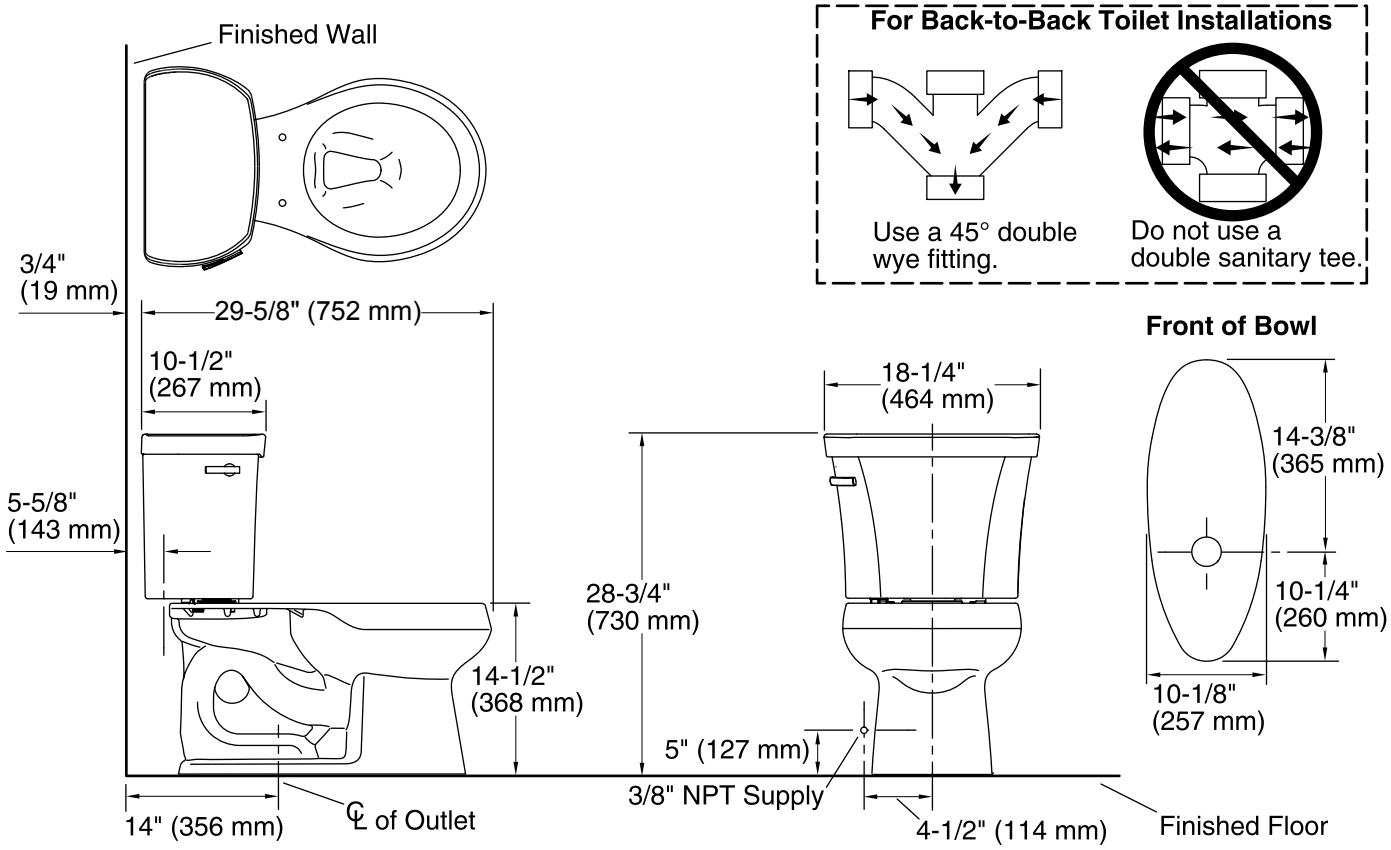

Technical Information

All product dimensions are nominal.

Toilet type:	Two-piece, Floor-mount
Waste Outlet:	Floor
Bowl shape:	Round front
Flush type:	Class Five®
Trap passageway:	2-1/8" (54 mm)
Water Consumption	
Full:	1.28 gpf (4.8 lpf)
Water surface size:	10-1/2" x 7-3/4" (267 mm x 197 mm)
Rim to water surface:	5-1/4" (133 mm)
Rough-in:	14
Seat-mounting holes:	5-1/2" (140 mm)

Notes

Install this product according to the installation instructions.