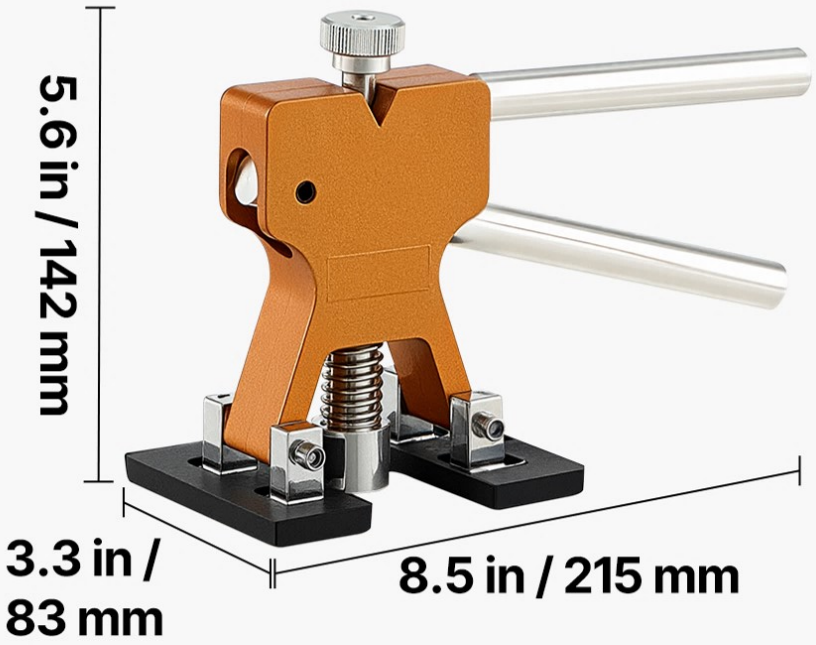

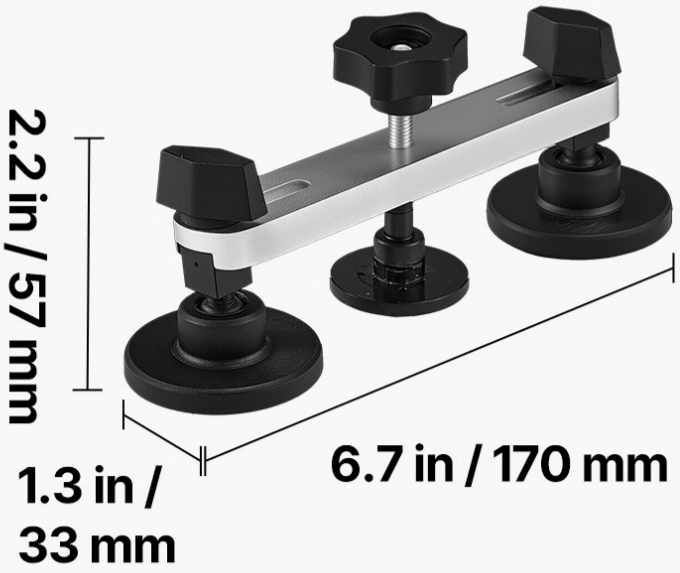

Item Model Number: **Sy-020**

Net Weight: **3.1 lbs/1.4 kg (including all accessories)**

Voltage: **100-240V**

Power: **20W**