Purist® | K-T14421-3

Rite-Temp® bath and shower trim kit with push-button diverter and cross handle, 2.5 gpm

Features

- Cross handles
- Push-button diverter
- 90° spout
- Completes Purist design solution with KOHLER fixtures and accessories
- Rite-Temp® pressure-balancing technology maintains water temperature within +/- 3°F



Available Colors/Finishes

Color tiles intended for reference only.

	CP	Polished Chrome
	SN	Vibrant Polished Nickel
	AF	Vibrant French Gold
	BN	Vibrant Brushed Nickel
	BV	Vibrant Brushed Bronze
	BL	Matte Black
	2MB	Vibrant Brushed Moderne Brass
	TT	Vibrant Titanium
	BGP	Vibrant Brushed Graphite

1-800-4KOHLER (1-800-456-4537)
Kohler Co. reserves the right to make revisions without notice to product specifications.
For the most current specification sheet, go to www.kohler.com USA or www.kohler.ca Canada.
5-30-2026 7:15 - US-CA

Codes/Standards

ASME A112.18.1/CSA B125.1
DOE - Energy Policy Act 1992

Technical Information

All product dimensions are nominal.

Handle

Handle Style/ Type:	Cross

Spout

Spout Reach:	7-3/4" (198 mm)

Flow Rate

Shower/Rainhead Rated Maximum Flow:	2.5 gpm (9.5 l/min)
Handshower Rated Maximum Flow:	2.5 gpm (9.5 l/min)

Valves

Required Valves:	Diverter, Pressure Balance

Material

- Premium material construction for durability and reliability
- KOHLER finishes resist corrosion and tarnishing

Recommended Products/Accessories

K-23723 Faucet cleaner

Required Products/Accessories

- K-11748 Series Rite-Temp® Valves

Warranty

See website for detailed warranty information.

KOHLER® Faucet Lifetime Limited Warranty

1-800-4KOHLER (1-800-456-4537)
Kohler Co. reserves the right to make revisions without notice to product specifications.
For the most current specification sheet, go to www.kohler.com USA or www.kohler.ca Canada.
5-30-2026 7:15 - US-CA

THE BOLD LOOK OF KOHLER.

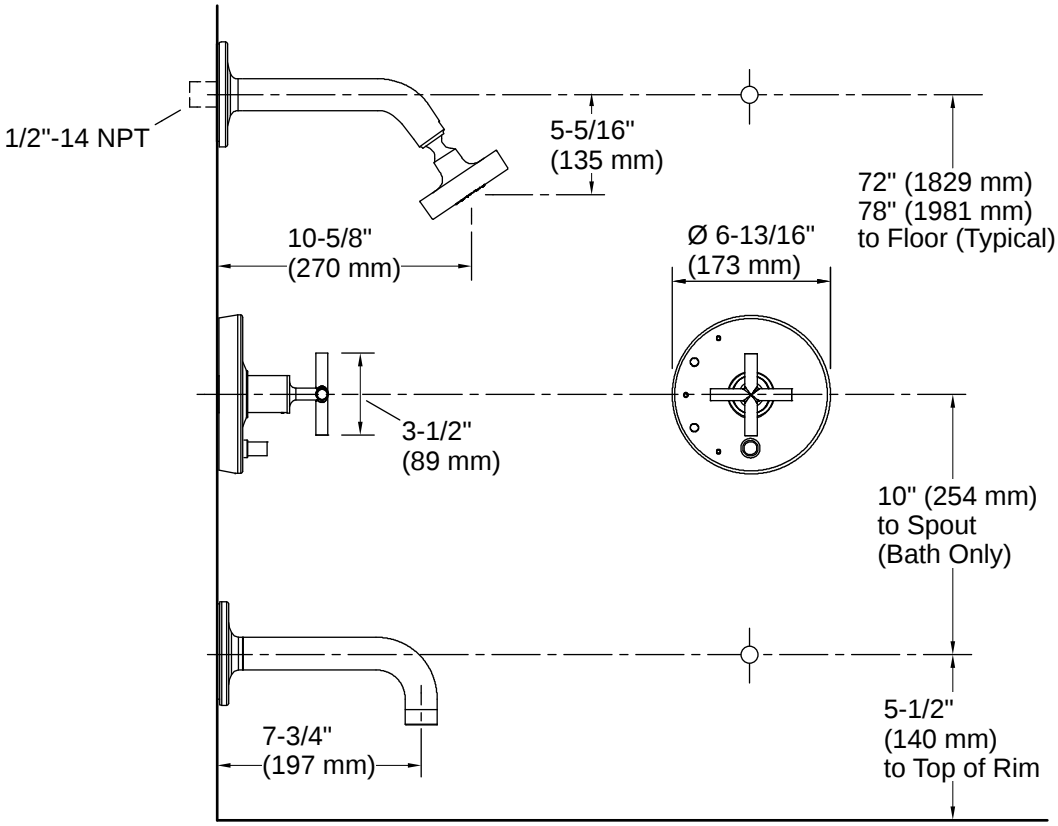

Installation

- NPT connection

Installation Notes

Install this product according to the installation instructions.

Avoid cross-flow conditions. Do not install shut-off device on either valve outlet.
Cap the shower outlet if deck-mount spout, diverter, or handshower is connected to the spout outlet.

1-800-4KOHLER (1-800-456-4537)
Kohler Co. reserves the right to make revisions without notice to product specifications.
For the most current specification sheet, go to www.kohler.com USA or www.kohler.ca Canada.
5-30-2026 7:15 - US-CA

THE BOLD LOOK OF KOHLER