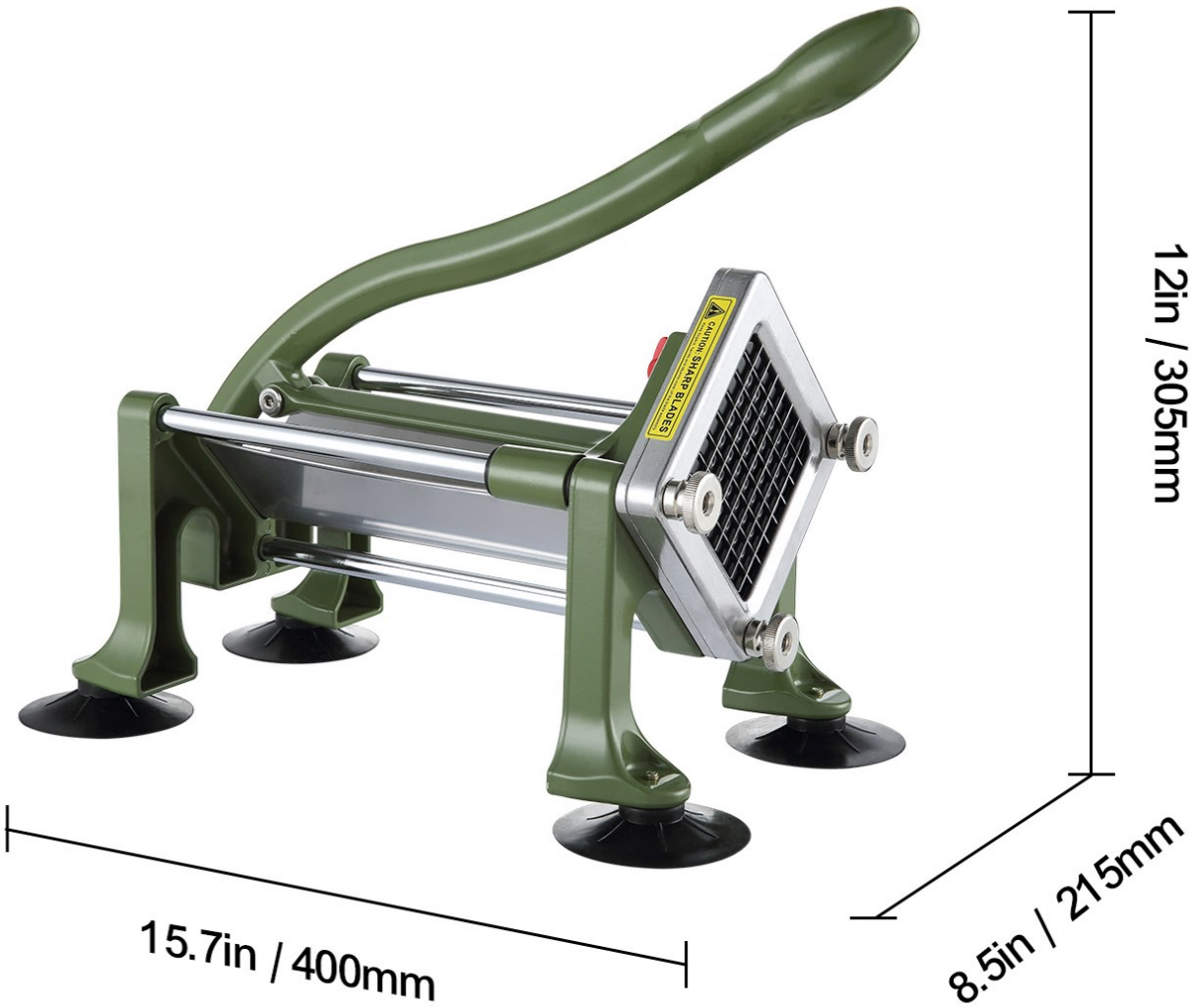
CAUTION: SHARP BLADES
12in / 305mm
15.7in / 400mm
8.5in / 215mm