EDALYNN MODERN 3 SEATER SOFA

DESIGN# SFV2003

Assembly Instructions

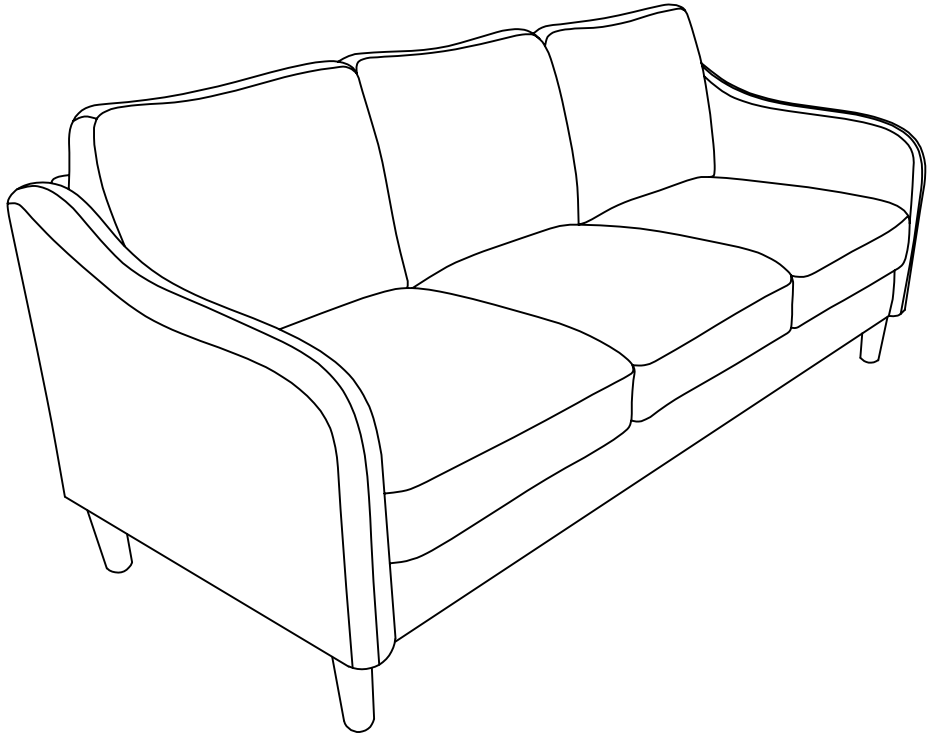

Need help?
Feel free to contact us via email or call
if you have any specific questions**!**
contact us:
cs@safavieh.com
866-422-9070

SAFAVIEH
C O N T U R E

Thanks for bringing Safavieh Couture into your home

Everything we make is incredibly simple to set up, including your new sofa. you won't need any additional tools.

PARTS LIST:

Ax1
Seat Base

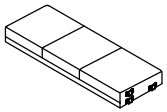

Bx1
Backrest

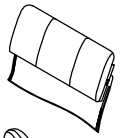

Cx1
LAF Arm

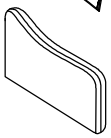

Dx1
RAF Arm

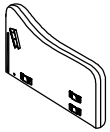

Ex4
Legs



Fx1
Crossbar



HARDWARE LIST:

HW1x2
Bolt
(1/4"*40mm)



HW2x2
Flat washer
(1/4"*Ø16*1,5mm)



HW3x1
Allen key
(M4*59)



5

Secure the fabric cover to the back of the stretcher and the inside of the back of the arm by aligning the Velcro and firmly pressing into place.

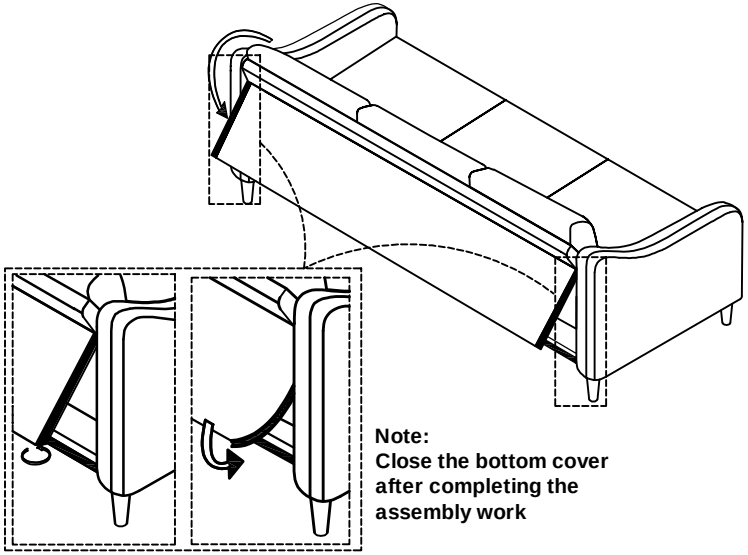

Note:
Close the bottom cover after completing the assembly work

6

Complete

Place the sofa in the place where you will use it. We'd love to see it – just tag us (we're @safavieh) and use the hashtag #safavieh on Instagram!

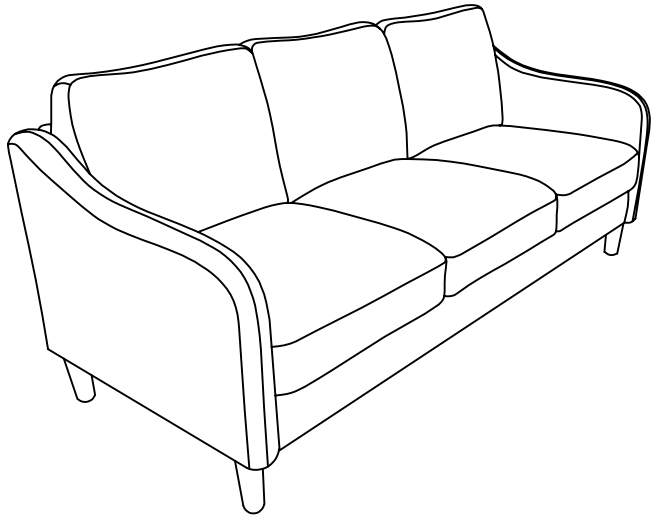

1

Screw the legs (E) clockwise into the Left arm rest (C) and right arm rest (D). Turn until they are fully tightened.

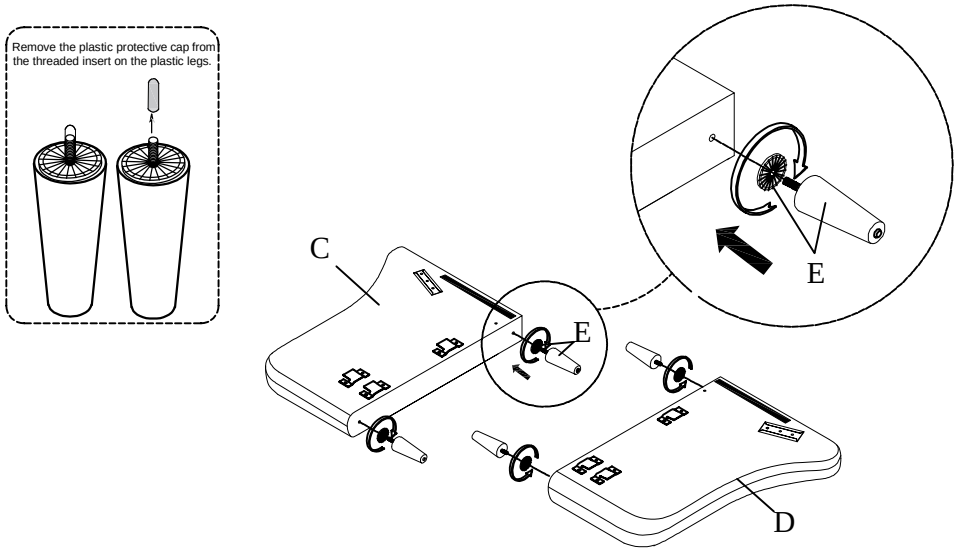

2

Align the hooks on the sides of the seat base (A) to the hooks on the insides of the arms (C&D). Push down firmly until they are secure.

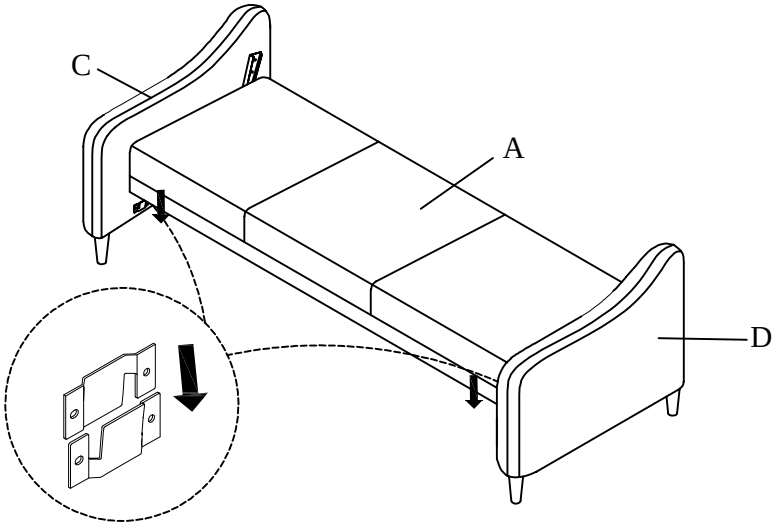

3

Align the brackets on the sides of the backrest (B) to the brackets on the insides of the arms (C&D). Push down from the top to secure the back.

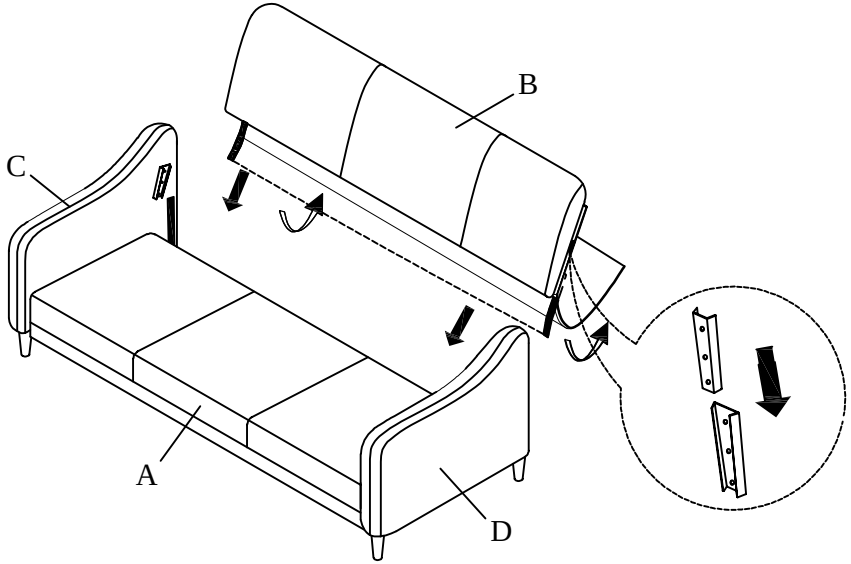

4

Place the Flat washers (HW2) on the bolts (HW1). Align the screw holes on the crossbar (F) to the screw holes inside the arms, on the back side of the sofa. Attach the crossbar (F) by using the Allen key (HW3) to screw in the bolts (HW1) with the washers.

