ADIRoffice

FLOOR STANDING LECTERN WITH ADJUSTABLE SHELF AND PEN/PENCIL TRAY

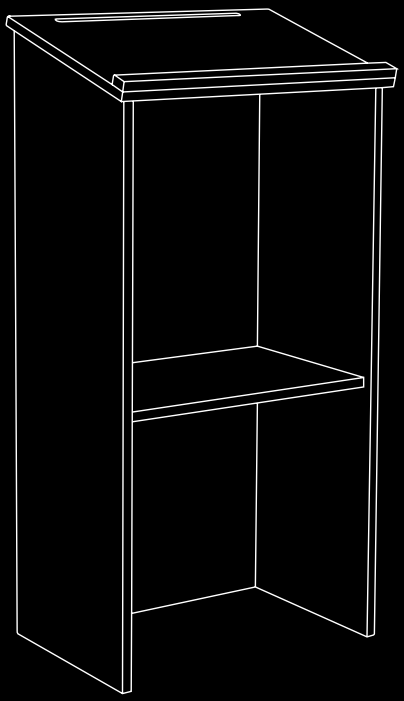

ADI661-01-SERIES

USER GUIDE

ADIRoffice

THANK YOU
FOR YOUR PURCHASE.

Known in the industry for excellent products, Adir Office is a manufacturer of innovative, solution-based products for the commercial and institutional markets worldwide.

Combining commitment to the customer, design innovation and skilled, dedicated workforces, they have produced a range of products that are an essential part of every commercial facility.

Every product is designed to the highest standards, enabling you to get your requirements done in a reliable and cost-eective way.



Table of Contents

1 Parts

2 Hardware

3 Installation

9 Warranty

Parts

A



Left Side Panel

B

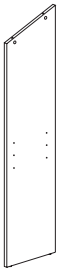

Right Side Panel

C



Back Panel

D

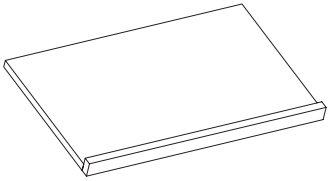

Top Panel

E

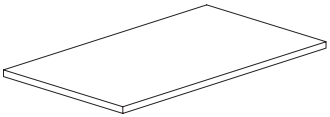

Shelf

Hardware

1

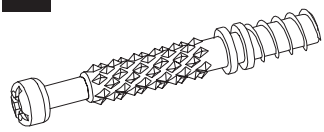

Cam Lock (x 10)

2



Cam Lock Bolt (x10)

3

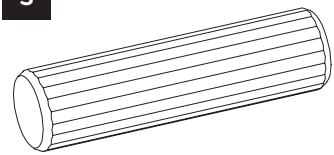

Wooden Dowel (x8)

4

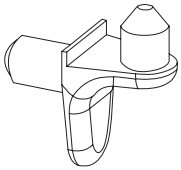

Shelf Pins (x4)

5

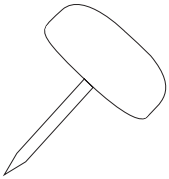

Plastic Feet (Optional) (x4)

Tools Needed (But Not Included):

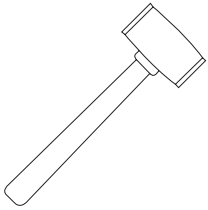

Rubber Mallet



Philips head Screwdriver

Installation

Step 1:

A. Locate the Left Side Panel (A) and the Right Side Panel (B) and lay them on a flat surface.

B. On both the Left Side Panel (A) and Right Side Panel (B), insert 2 Wooden Dowels into the outer top and bottom holes.

C. Gently tap them in with a rubber mallet until secure.

D. On both the Left Side Panel (A) and Right Side Panel (B), insert 4 Cam Lock Bolts (2) and secure into place with a Philips head screwdriver.

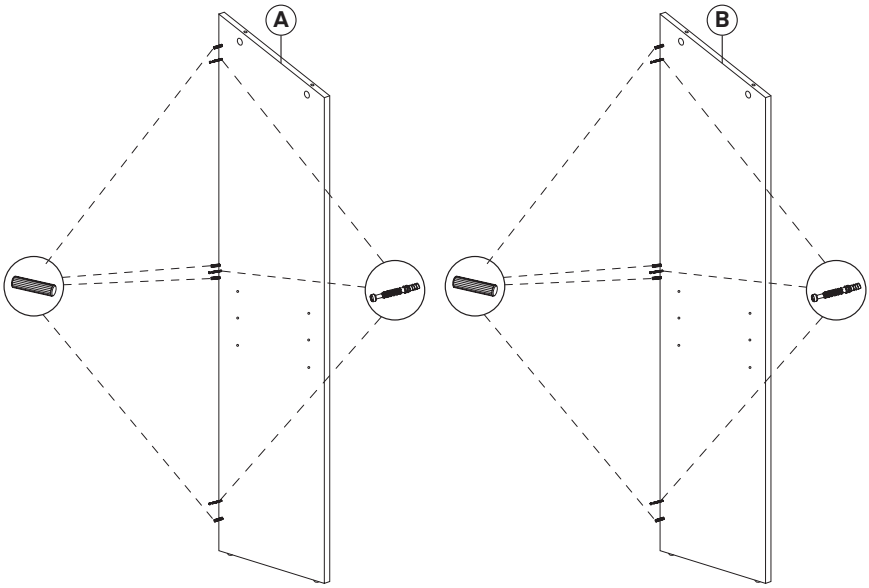

Step 2:

A. Locate the Back Panel (C) and affix the Right Side Panel (B) to it by inserting the Cam Lock Bolts (2) into the pre-drilled holes.
   a. Gently tap the panel in with a rubber mallet until it is flush.

B. Insert 3 Cam Locks (1) into the holes located on the right side.

C. Turn the Cam Lock's (1) to the right, using a Philips head screwdriver, to secure the Cam Lock Bolts (2).

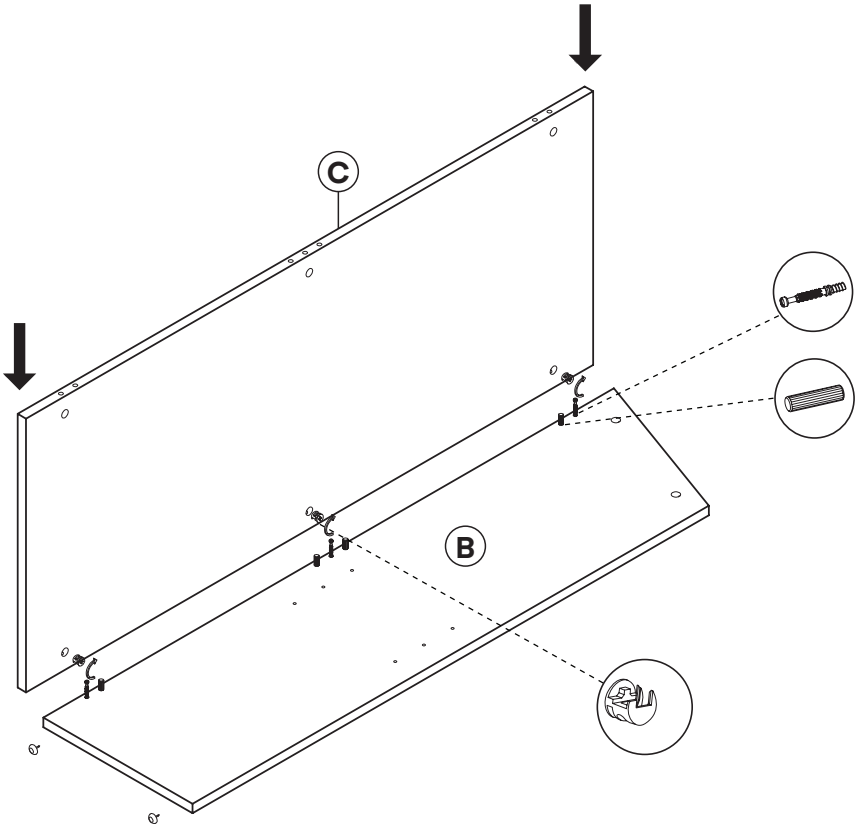

Step 3:

A. Stand your assembled structure up and then get the Left Side Panel (A)

B. Insert the side of the left panel with the Cam Lock Bolts (2) into the pre-drilled holes located on the left side of your assembled structure.

C. Insert 3 Cam Lock's (1) into the holes that are adjacent from the Cam Lock Bolt's.

D. Turn them to the right with a Philips head screwdriver to secure the Cam Lock Bolt's (2) in place.

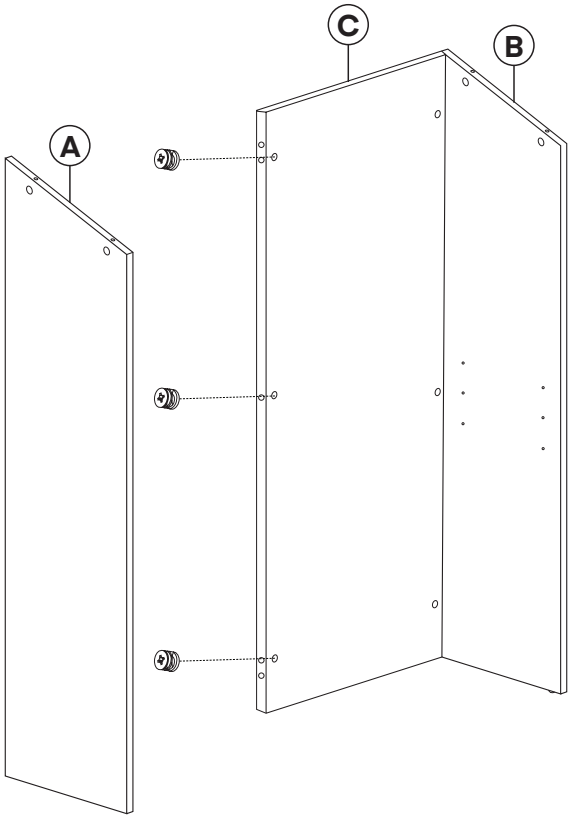

Step 4:

A. Locate the Top Panel (D), add two Cam Lock Bolts (2) into the holes located next to the lip of the Top Panel (D).

B. Secure them into place with a Philips head screwdriver.

C. Add two Wooden Dowels (3) into the remaining pre-drilled holes.

D. Gently tap them until secure using the rubber mallet.

E. Add 2 Cam Locks, as pictured, and tighten with a Philips head screwdriver.

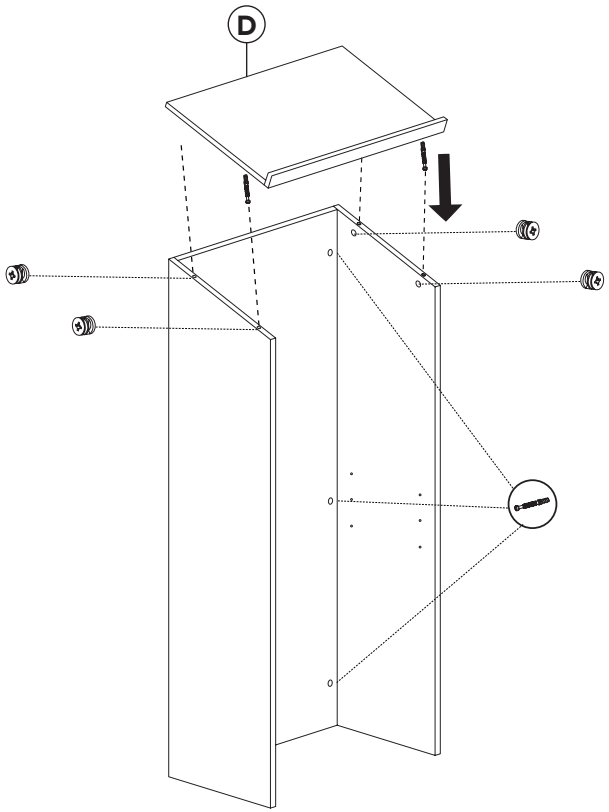

Step 5:

A. Insert the 4 Shelf Pins (4) into the pre-drilled holes located on the side panels.

B. Slide the Shelf (E) on top of the pins and your Floor Standing Lectern with Adjustable Shelf and Pen/Pencil Tray is now ready to be used.

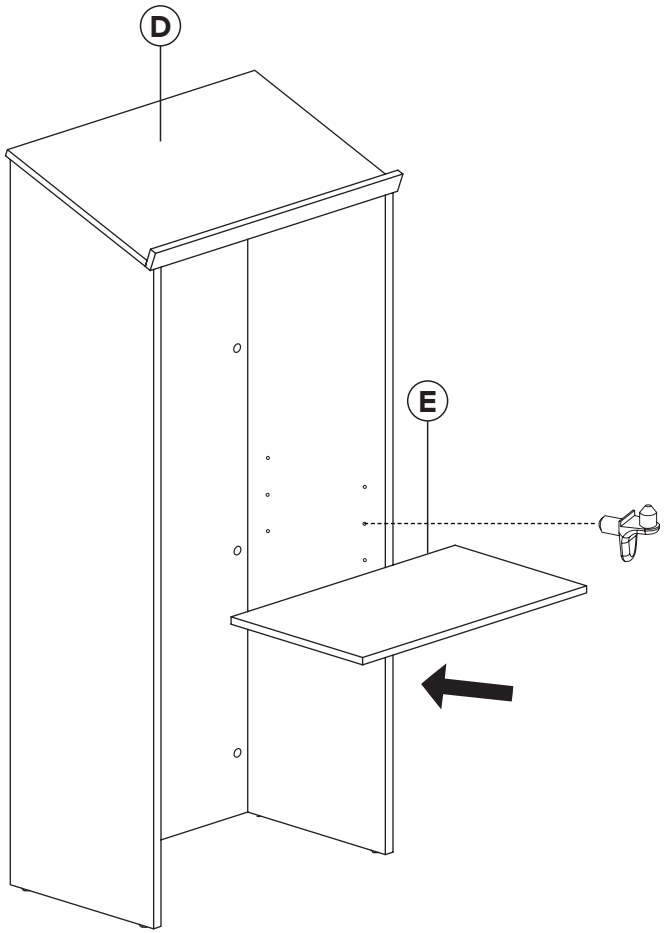

Plastic Feet

A. If you want to install the included Plastic Feet (5) on your Lectern, first, remove the Shelf (E).

B. Lower your Lectern onto its Back Panel (C).

C. Take your Plastic Feet (5) and gently tap them into the four corners of the Lectern with a rubber mallet until secure.

D. Stand your Lectern upright, insert the Shelf (E), and it is ready to be used.

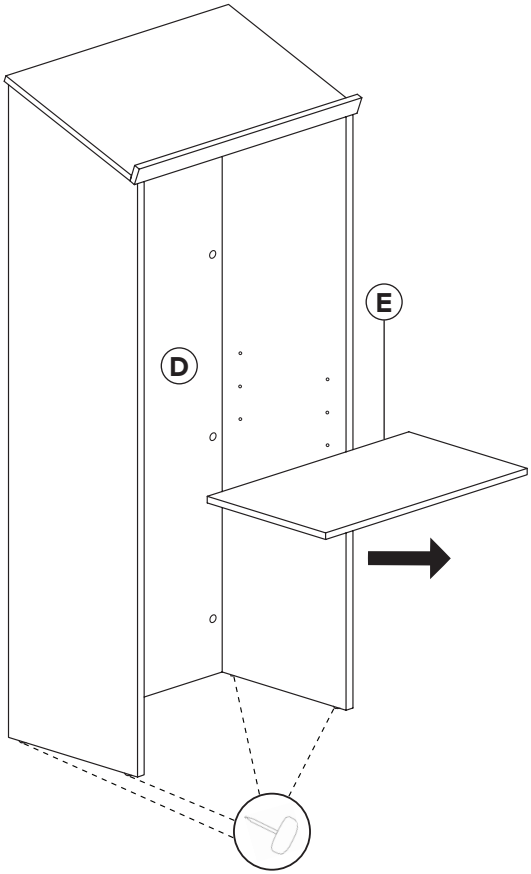

Limited Warranty

1. Adir Corp (the “Company” or “Tiger Companies”) warrants to the purchaser that the product will be free from defects in workmanship and materials for a period of 1 year from the date of purchase. The warranty period is not extended if we repair, replace, exchange, or provide a refund for the product (as determined in our sole discretion). We may change the availability of this limited warranty at our discretion, but any changes will not be retroactive.

2. These warranties are not assignable or transferable to any other person, including, without limitation, any subsequent owner or other transferee of the product.

3. This Warranty does not apply to: (a) damage caused by misuse, tampering, abuse, neglect, or accident; (b) damage caused by improper installation, modification, or service; (c) alteration of the serial number; or (d) use that violates the instructions furnished by the Company will void this warranty.

4. The sole responsibility of the Company shall be limited to (a) the repair or replacement (in its sole discretion) of any component of the product which fails to conform to this; (b) a refund the purchase price of such product (in its sole discretion), at no cost to the purchaser for the period of the warranty, or (c) an exchange for a similar product, comparable in function and price.

5. Contact the Company directly at 1-(800)-805-1790 to obtain service under this warranty. If it becomes applicable to send a defective product to the Company, a Return Authorization Number must first be obtained from the Company. In order to obtain service under this warranty, purchaser may be required to provide the Company with the following items (a) proof of purchase , (b) photographs and or videos (of the damage, and (c) a written testimonial describing the defect.

6. Products shipped without prior Return Authorization and Return Authorization Number may not be accepted, and the Company will not be responsible for their disposition and/or cost of return to the owner. 7. The Company will not assume any responsibility for any loss or damage incurred in shipping and or delivery.

7. The product(s) must be returned within 14 calendar days of receiving the return authorization from the Company and must include the original proof of purchase for the warranty to be honored.

8. This warranty is not an insurance policy. The Company is not responsible for any manner of damage to or theft of the Purchaser’s product or its contents.

9. Any implied warranties that the purchaser may have are limited to the duration of the warranties described above. There are no further warranties that extend or apply beyond the face hereof, and the Company expressly disclaims and excludes any and all warranties of merchantability or fitness for a particular purpose. Some states do not allow limitations on how long an implied warranty lasts, so the above limitation may not apply to you.

10. THE REMEDIES DESCRIBED ABOVE ARE YOUR SOLE AND EXCLUSIVE REMEDIES AND THE COMPANY’S ENTIRE LIABILITY FOR ANY BREACH OF THIS LIMITED WARRANTY. OUR LIABILITY SHALL UNDER NO CIRCUMSTANCES EXCEED THE ACTUAL AMOUNT PAID BY YOU FOR THE DEFECTIVE PRODUCT, NOR SHALL WE UNDER ANY CIRCUMSTANCES BE LIABLE FOR ANY CONSEQUENTIAL, INCIDENTAL, SPECIAL OR PUNITIVE DAMAGES OR LOSSES, WHETHER DIRECT OR INDIRECT. SOME STATES DO NOT ALLOW THE EXCLUSION OR LIMITATIONS OF INCIDENTAL OR CONSEQUENTIAL DAMAGES, SO THE LIMITATION MAY NOT APPLY TO YOU.

11. Repair or replacement shall be the sole remedy for the purchaser under this warranty. The company shall not be liable for any direct, indirect, incidental or consequential damages, losses or expense arising from the use or misuse of the product. Some states do not allow the exclusion or limitations of incidental or consequential damages, so the limitation may not apply to you. This warranty gives you specific legal rights, and you may also have other rights which vary from state to state.

ADIRoffice

ITEM#: ADI661-01-SERIES

© 2022 Adir Corp

adircorp.com