ASSEMBLY INSTRUCTIONS

ITEM NO. FB3052CST-SC-2PK

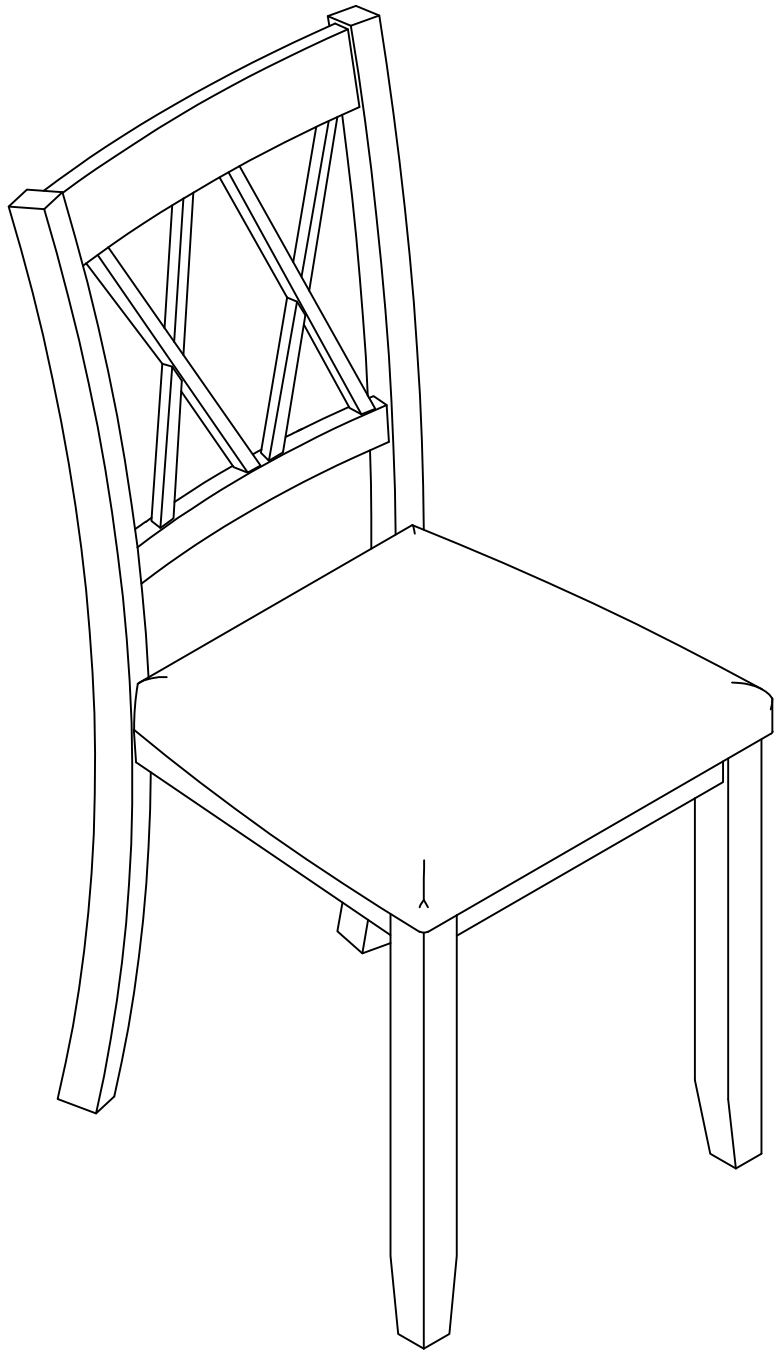

ASSEMBLY TIPS:

1. Remove hardware from box and sort by size.
2. Please check to see that all hardware and parts are present prior to start of assembly.
3. Please follow attached instructions in the same sequence as numbered to assure fast & easy assembly.

PARTS LIST

NO.	DIAGRAM	PART NAME	Q'Ty
1	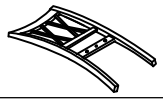	CHAIR BACK	1PC
2	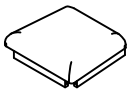	WOODEN SEAT	1PC
3	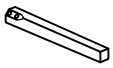	LEG	2PCS

HARDWARE LIST

NO.	DIAGRAM	PART NAME	Q'Ty
A		BOLT / BOULON Ø1/4" x 1-1/2"	2PCS
B		BOLT / BOULON Ø1/4" x 2-3/8"	4PCS
C		BOLT / BOULON Ø1/4" x 3"	4PCS
D		LOCK WASHER Ø1/4"	10PCS
E		FLAT WASHER Ø1/4" x 19mm	10PCS
F	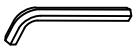	ALLEN KEY 4mm	1PC

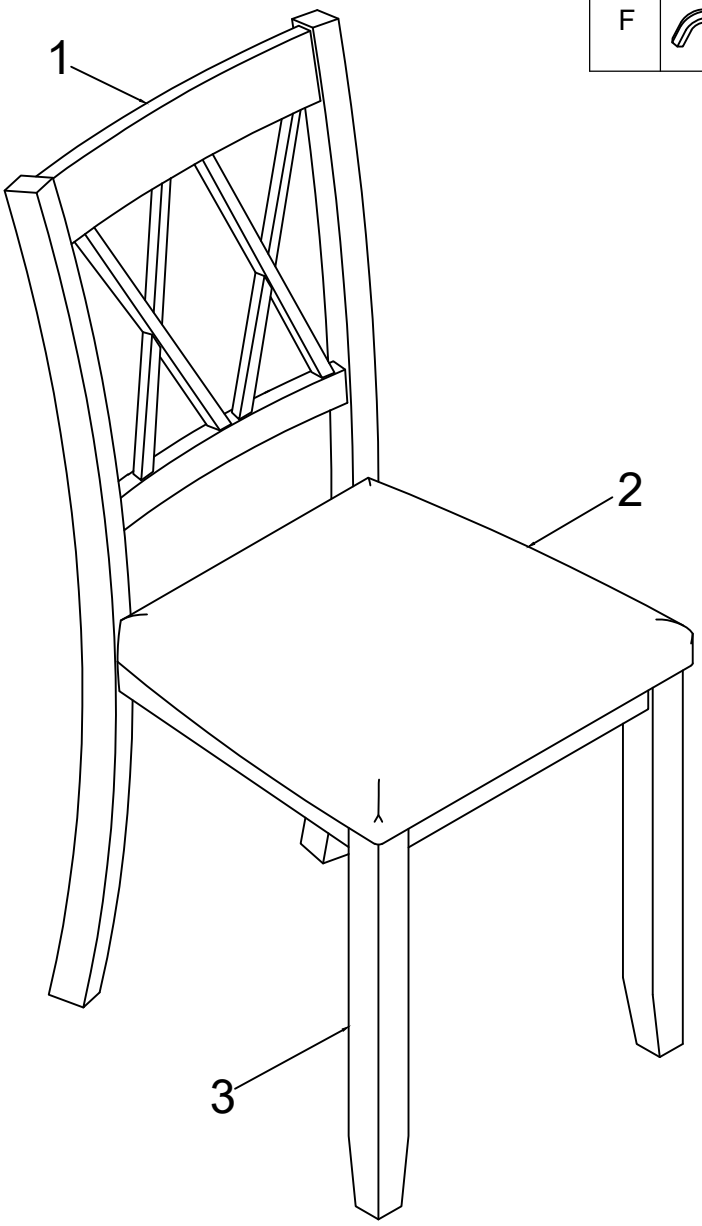

STEP 1

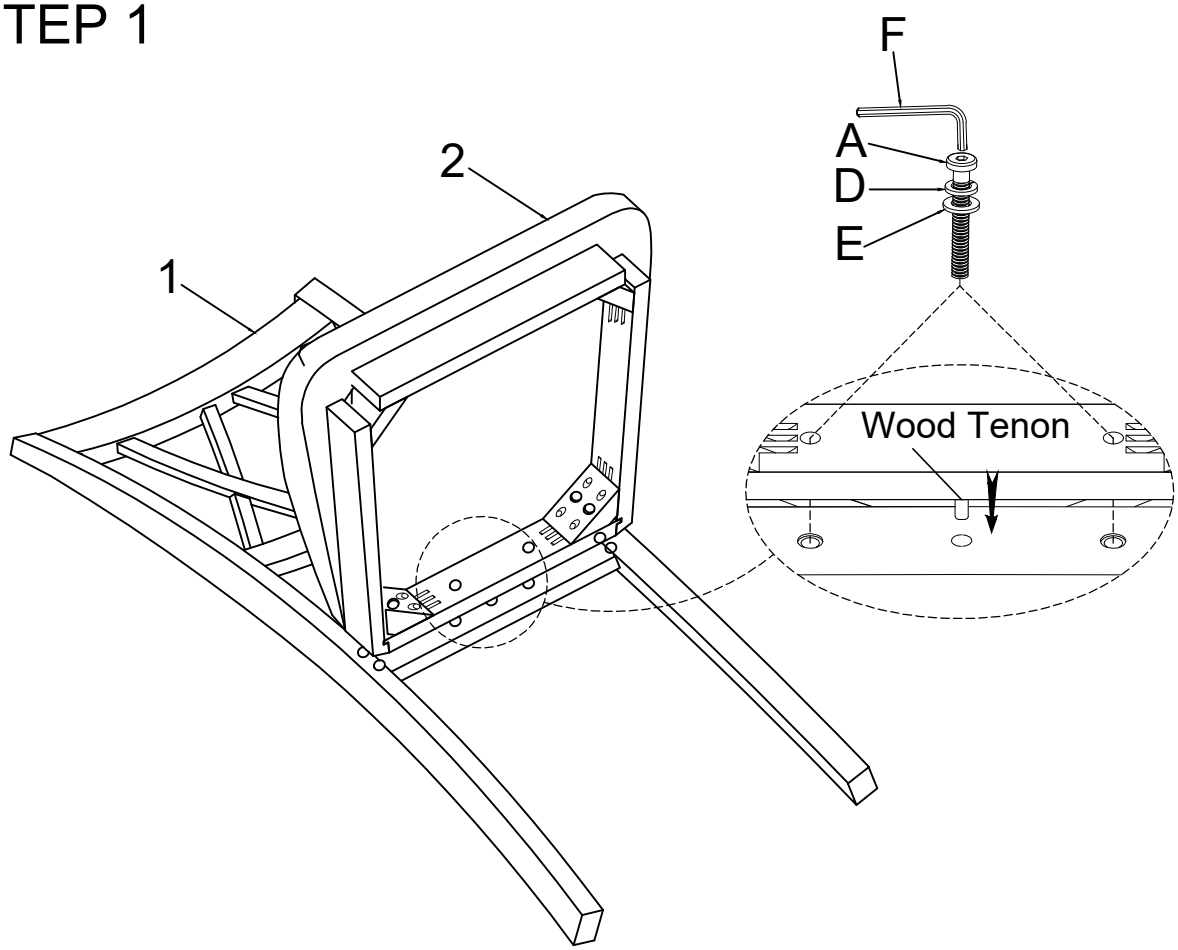

STEP 2

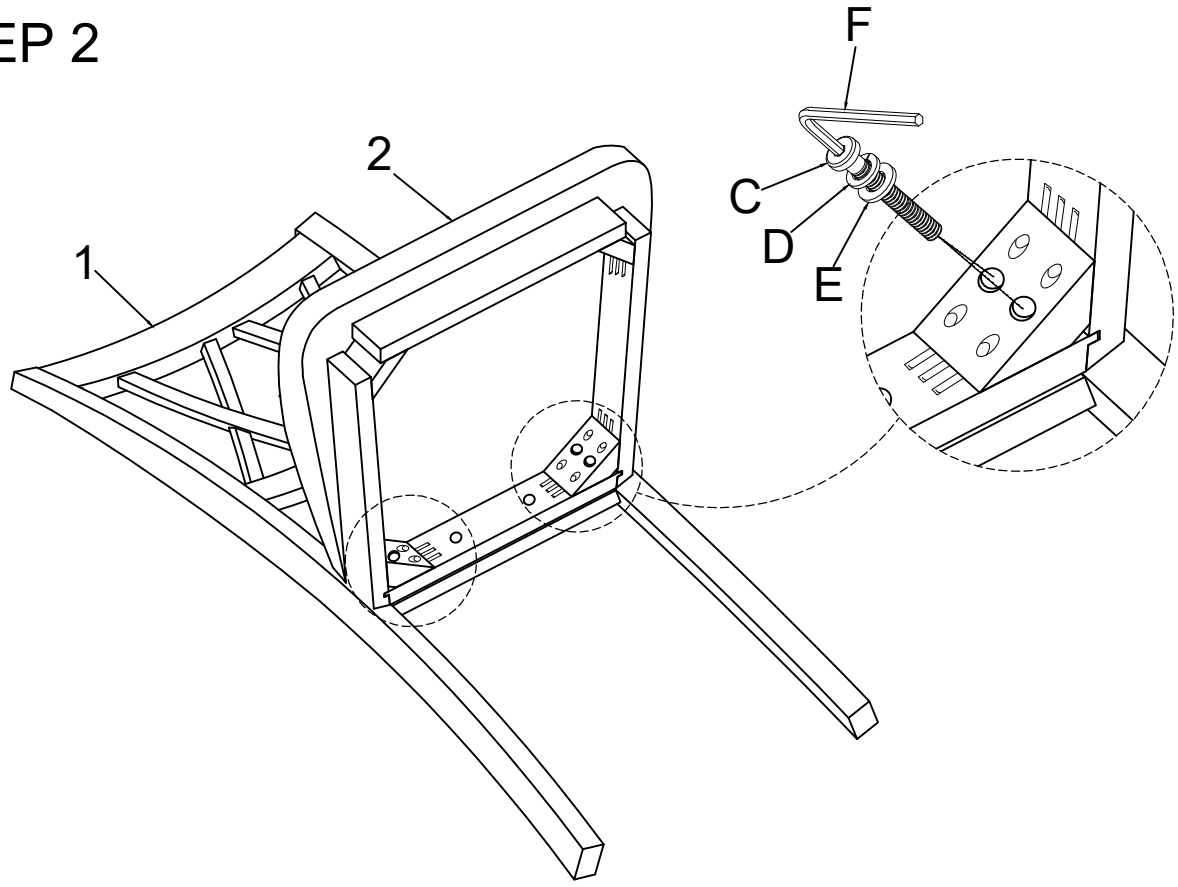

Do not tighten screws until completely assembled.

STEP 3

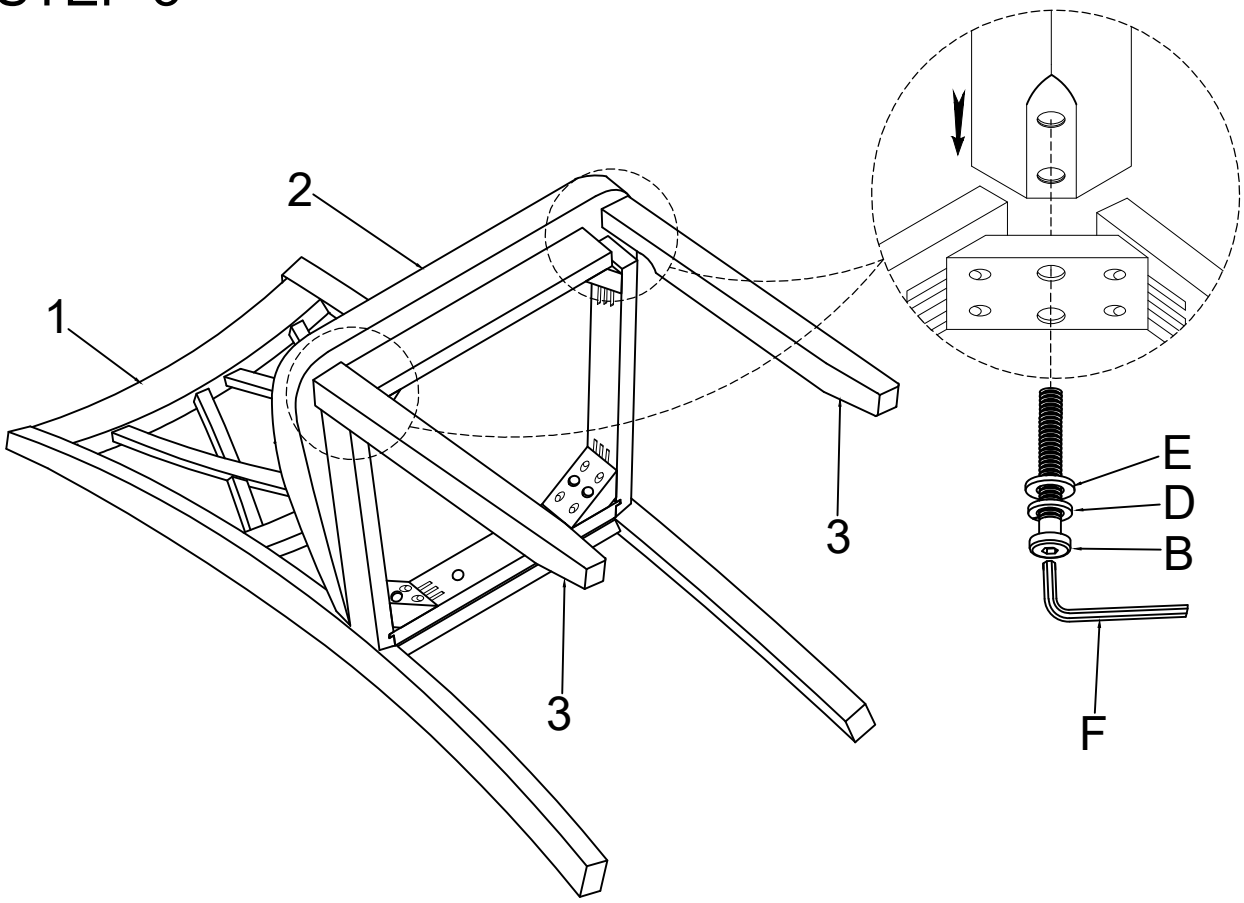

STEP 4

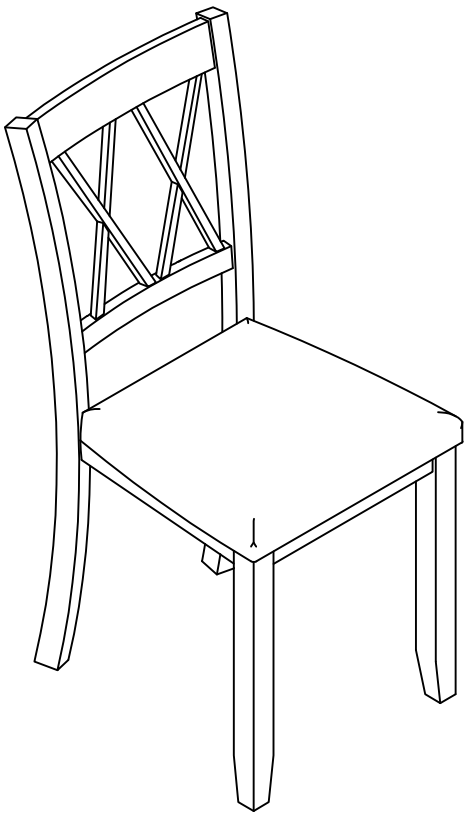

Tighten all screws until completely assembled.