MOISWELL

Master RD200

USER MANUAL

Welcome

Thank you for selecting MOISWELL as your trusted dehumidifier provider!
At MOISWELL, we take pride in offering premium commercial and industrial dehumidifiers, available in both vertical and horizontal orientations. Our dehumidifiers are designed to swiftly reduce humidity levels, making them ideal for a wide range of applications, including excess water removal, rapid construction drying, and water damage restoration. Equipped with an onboard humidistat, these commercial dehumidifiers effortlessly maintain your desired room humidity level.
They are perfect for warehouses, storage areas, manufacturing plants, office buildings, restaurants, bars, sports facilities, locker rooms, indoor pools and spas, marine environments, and any space susceptible to excessive humidity.

We sincerely hope that your MOISWELL dehumidifier enhances your environment. Before plugging in your new dehumidifier, we strongly recommend reviewing the comprehensive user manual provided. It contains essential safety guidelines, operational instructions, troubleshooting tips, maintenance recommendations, and warranty details, ensuring the longevity and reliability of your investment.

For a more efficient support experience, please take a moment to register your product on our website at **https://moiswell.com/pages/warranty-registration.** Our commitment is to ensure your utmost satisfaction with your purchase. If, for any reason, your buying experience falls short of excellence, please do not hesitate to let us know. Your feedback is invaluable to us.

We are here to assist you every step of the way. Reach out to our dedicated customer support team via email at **service@moiswell.com**, providing your purchase order ID for faster and more personalized assistance. Once again, thank you for choosing MOISWELL. We look forward to exceeding your expectations.

BEFORE FIRST USE:

IMPORTANT

Before first use, allow the dehumidifier to stand upright for 24 hours.

During transit, the dehumidifier may have been tilted or laid on its side, which can cause internal fluids like compressor oil to move around. Letting it stand upright gives everything time to settle, ensuring the dehumidifier works properly from the start.

This is a normal precaution and does not indicate any issue with the dehumidifier.

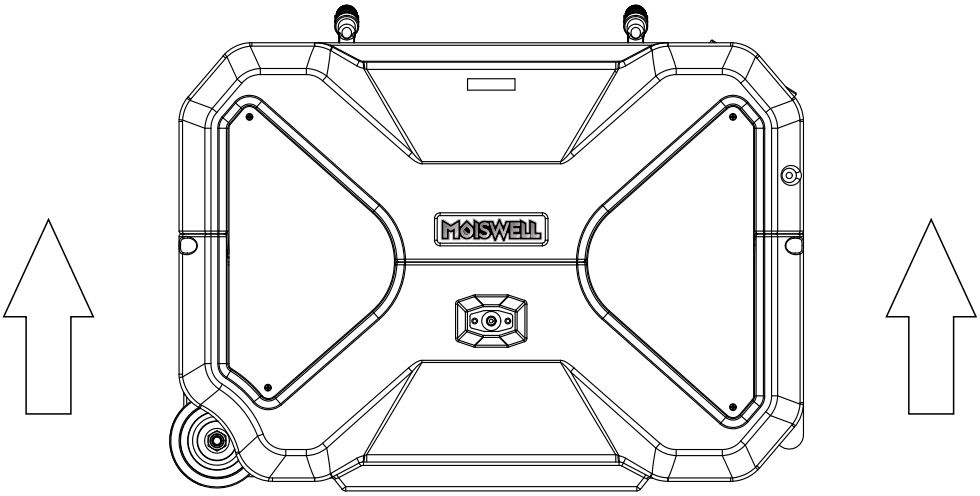

CONTENTS

Warning For Using R32 Refrigerant **1**

Safety Precautions **10**

Parts Identification **11**

Operation Instructions **12**

1. Move the Dehumidifier 12

2. Position Your Dehumidifier 12

3. Set the Drain Hose 12

4. Plug in Electrical Cord 13

5. Understand the Control Panel 13

6. General Operation Instructions 16

7. Timer Setting 17

8. Smart Functions 18

Maintenance **19**

1. Clean the Dehumidifier 19

2. Clean the Air Filter 19

3. Store the Dehumidifier 20

Trouble Shooting Guide **21**

Trouble Shooting Chart 21

Warranty **23**

WARNING for Using R32 Refrigerant:

Transportation, marking and storage for units that employ flammable refrigerants

1. General

The following information is provided for units that employ FLAMMABLE REFRIGERANTS.

2. Transport of equipment containing flammable refrigerants

Attention is drawn to the fact that additional transportation regulations may exist with respect to equipment containing flammable gas. The maximum number of pieces of equipment or the configuration of the equipment permitted to be transported together will be determined by the applicable transport regulations.

3. Marking of equipment using signs

Signs for similar appliances used in a work area are generally addressed by local regulations and give the minimum requirements for the provision of safety and/or health signs for a work location. All required signs are to be maintained and employers should ensure that employees receive suitable and sufficient instruction and training on the meaning of appropriate safety signs and the actions that need to be taken in connection with these signs.

The effectiveness of signs should not be diminished by too many signs being placed together. Any pictograms used should be as simple as possible and contain only essential details.

4. Disposal of equipment using flammable refrigerants

See national regulations.

5. Storage of equipment/appliances

The storage of the appliance should be in accordance with the applicable regulations or instructions,whichever is more stringent.

6. Storage of packed (unsold) equipment

Storage package protection should be constructed in such a way that mechanical damage to the equipment inside the package will not cause a leak of the REFRIGERANT CHARGE.

The maximum number of pieces of equipment permitted to be stored together will be determined by local regulations.

Requirements for operation,service and installation manuals of appliances using flammable refrigerants

WARNING

Do not use means to accelerate the defrosting process or to clean, other than those recommended by the manufacturer.

The appliance shall be stored in a room without continuously operating ignition sources (for example:open flames, an operating gas appliance or an operating electric heater.Do not pierce or burn.

Be aware that refrigerants may not contain an odour.









Refrigerant Safety Group A2L

Qualification of workers

The manual shall contain specific information about the required qualification of the working personnel for maintenance, service and repair operations. Every working procedure that affects safety means shall only be carried out by competent persons.

Examples for such working procedures are:

- breaking into the refrigerating circuit;
- opening of sealed components;

Competence of service personnel

1. General

Information of procedures additional to usual information for refrigerating appliance installation, repair, maintenance and decommission procedures is required when an appliance with FLAMMABLE REFRIGERANT is affected.

The training of these procedures is carried out by national training organisations or manufacturers that are accredited to teach the relevant national competency standards that may be set in legislation.

The achieved competence should be documented by a certificate.

2. Information and training

2.1) The training should include the substance of the following.

2.2) Information about the explosion potential of FLAMMABLE REFRIGERANTS to show that flammables may be dangerous when handled without care.

2.3) Information about POTENTIAL IGNITION SOURCES, especially those that are not obvious, such as lighters, light switches, vacuum cleaners, electric heaters.

2.4) Information about the different safety concepts:

- Unventilated-Safety of the appliance does not depend on ventilation of the housing.
- Switching off the appliance or opening of the housing has no significant effect on the safety.
- Nevertheless, it is possible that leaking refrigerant may accumulate inside the enclosure and flammable atmosphere will be released when the enclosure is opened.
- Ventilated enclosure-Safety of the appliance depends on ventilation of the housing.
- Switching off the appliance or opening of the enclosure has a significant effect on the safety.
- Care should be taken to ensure sufficient ventilation before.
- Ventilated room -Safety of the appliance depends on the ventilation of the room.
- Switching off the appliance or opening of the housing has no significant effect on the safety.
- The ventilation of the room shall not be switched off during repair procedures.

2.5) Information about refrigerant detectors:

- Principle of function, including influences on the operation.
- Procedures, how to repair, check or replace a refrigerant detector or parts of it in a safe way.
- Procedures, how to disable a refrigerant detector in case of repair work on the refrigerant carrying parts.

2.6) Information about the concept of sealed components and sealed enclosures according to IEC60079-15:2010.

2.7) Information about the correct working procedures:

a) Commissioning

- Ensure that the floor area is sufficient for the REFRIGERANT CHARGE or that the ventilation duct is assembled in a correct manner.
- Connect the pipes and carry out a leak test before charging with refrigerant.
- Check safety equipment before putting into service.

b) Maintenance

- Portable equipment shall be repaired outside or in a workshop specially equipped for servicing units with FLAMMABLE REFRIGERANTS.
- Ensure sufficient ventilation at the repair place.
- Be aware that malfunction of the equipment may be caused by refrigerant loss and a refrigerant leak is possible.
- Discharge capacitors in a way that won't cause any spark. The standard procedure to short circuit the capacitor terminals usually creates sparks.
- Reassemble sealed enclosures accurately. If seals are worn, replace them.
- Check safety equipment before putting into service.

c) Repair

- Portable equipment shall be repaired outside or in a workshop specially equipped for servicing units with FLAMMABLE REFRIGERANTS.
- Ensure sufficient ventilation at the repair place.
- Be aware that malfunction of the equipment may be caused by refrigerant loss and a refrigerant leak is possible.
- Discharge capacitors in a way that won't cause any spark.

When brazing is required, the following procedures shall be carried out in the following order:

--Safely remove the refrigerant following local and national regulations. If the recovery is not required by national regulations, drain the refrigerant to the outside. Take care that the drained refrigerant will not cause any danger. In doubt, one person should guard the outlet. Take special care that drained refrigerant will not float back into the building;

--Purge the refrigerant circuit with oxygen free nitrogen;

--Evacuate the refrigerant circuit;

--Purge the refrigerant circuit with nitrogen for 5 min (not required for A2L refrigerants).

--Evacuate again(not required for A2L refrigerants).

--Remove parts to be replaced by cutting or brazing.

--Purge the braze point with nitrogen during the brazing procedure required for repair.

--Carry out a leak test before charging with refrigerant.

- Reassemble sealed enclosures accurately. If seals are worn, replace them.
- Check safety equipment before putting into service.
- Reassemble sealed enclosures accurately. If seals are worn, replace them.
- Check safety equipment before putting into service.

d) Disposal

- Ensure sufficient ventilation at the working place.

- Remove the refrigerant. If the recovery is not required by national regulations, drain the refrigerant to the outside. Take care that the drained refrigerant will not cause any danger. In doubt, one person should guard the outlet. Take special care that drained refrigerant will not float back into the building.
- When flammable refrigerants are used,

--evacuate the refrigerant circuit.
--purge the refrigerant circuit with oxygen free nitrogen.
--evacuate again. (not required for A2L refrigerants);
--cut out the compressor and drain the oil.

Information on servicing

1. General

The manual shall contain specific information for service personnel according.

2. Checks to the area

Prior to beginning work on systems containing FLAMMABLE REFRIGERANTS, safety checks are necessary to ensure that the risk of ignition is minimised.
For repair to the REFRIGERATING SYSTEM

3. Work procedure

Work shall be undertaken under a controlled procedure so as to minimise the risk of a flammable gas or vapour being present while the work is being performed.

4. General work area

All maintenance staff and others working in the local area shall be instructed on the nature of work being carried out. Work in confined spaces shall be avoided.

5. Checking for presence of refrigerant

The area shall be checked with an appropriate refrigerant detector prior to and during work, to ensure the technician is aware of potentially toxic or flammable atmospheres. Ensure that the leak detection equipment being used is suitable for use with all applicable refrigerants, i. e. non-sparking, adequately sealed or intrinsically safe.

6. Presence of fire extinguisher

If any hot work is to be conducted on the refrigerating equipment or any associated parts, appropriate fire extinguishing equipment shall be available to hand. Have a dry powder or CO2 fire extinguisher adjacent to the charging area.

a) Commissioning

- Ensure that the floor area is sufficient for the REFRIGERANT CHARGE or that the ventilation duct is assembled in a correct manner.
- Connect the pipes and carry out a leak test before charging with refrigerant.
- Check safety equipment before putting into service.

b) Maintenance

- Portable equipment shall be repaired outside or in a workshop specially equipped for servicing units with FLAMMABLE REFRIGERANTS.
- Ensure sufficient ventilation at the repair place.
- Be aware that malfunction of the equipment may be caused by refrigerant loss and a refrigerant leak is possible.

- Discharge capacitors in a way that won't cause any spark. The standard procedure to short circuit the capacitor terminals usually creates sparks.
- Reassemble sealed enclosures accurately. If seals are worn, replace them.
- Check safety equipment before putting into service.

c) Repair

- Portable equipment shall be repaired outside or in a workshop specially equipped for servicing units with FLAMMABLE REFRIGERANTS.
- Ensure sufficient ventilation at the repair place.
- Be aware that malfunction of the equipment may be caused by refrigerant loss and a refrigerant leak is possible.
- Discharge capacitors in a way that won't cause any spark.
- When brazing is required, the following procedures shall be carried out in the following order:

--Safely remove the refrigerant following local and national regulations. If the recovery is not required by national regulations, drain the refrigerant to the outside. Take care that the drained refrigerant will not cause any danger. In doubt, one person should guard the outlet.

Take special care that drained refrigerant will not float back into the building;

d) Decommissioning

- If the safety is affected when the equipment is putted out of service, the REFRIGERANT CHARGE shall be removed before decommissioning.
- Ensure sufficient ventilation at the equipment location.
- Be aware that malfunction of the equipment may be caused by refrigerant loss and a refrigerant leak is possible.
- Discharge capacitors in a way that won't cause any spark.
- Remove the refrigerant. If the recovery is not required by national regulations, drain the refrigerant to the outside. Take care that the drained refrigerant will not cause any danger. In doubt, one person should guard the outlet. Take special care that drained refrigerant will not float back into the building.
- When FLAMMABLE REFRIGERANTS except A2L REFRIGERANTS are used,

--Evacuate the refrigerant circuit.

7. No ignition sources

No person carrying out work in relation to a REFRIGERATING SYSTEM which involves exposing any pipe work shall use any sources of ignition in such a manner that it may lead to the risk of fire or explosion. All possible ignition sources, including cigarette smoking, should be kept sufficiently far away from the site of installation, repairing, removing and disposal, during which refrigerant can possibly be released to the surrounding space.
Prior to work taking place, the area around the equipment is to be surveyed to make sure that there are no flammable hazards or ignition risks. "No Smoking" signs shall be displayed.

8. Ventilated area

Ensure that the area is in the open or that it is adequately ventilated before breaking into the system or conducting any hot work. A degree of ventilation shall continue during the period that the work is carried out. The ventilation should safely disperse any released refrigerant and preferably expel it externally into the atmosphere.

9. Checks to the refrigerating equipment

Where electrical components are being changed, they shall be fit for the purpose and to the correct specification. At all times the manufacturer's maintenance and service guidelines shall be followed. If in doubt, consult the manufacturer's technical department for assistance.

The following checks shall be applied to installations using.

FLAMMABLE REFRIGERANTS:

--The actual REFRIGERANT CHARGE is in accordance with the room size within which the refrigerant containing parts are installed;

--The ventilation machinery and outlets are operating adequately and are not obstructed;

--If an indirect refrigerating circuit is being used, the secondary circuit shall be checked for the presence of refrigerant;

--Marking to the equipment continues to be visible and legible. Markings and signs that are illegible shall be corrected;

--Refrigerating pipe or components are installed in a position where they are unlikely to be exposed to any substance which may corrode refrigerant containing components, unless the components are constructed of materials which are inherently resistant to being corroded or are suitably protected against being so corroded.

10. Checks to electrical devices

Repair and maintenance to electrical components shall include initial safety checks and component inspection procedures. If a fault exists that could compromise safety, then no electrical supply shall be connected to the circuit until it is satisfactorily dealt with. If the fault cannot be corrected immediately but it is necessary to continue operation, an adequate temporary solution shall be used. This shall be reported to the owner of the equipment so all parties are advised.

Initial safety checks shall include:

- That capacitors are discharged: this shall be done in a safe manner to avoid possibility of sparking;
- That no live electrical components and wiring are exposed while charging, recovering or purging the system;
- That there is continuity of earth bonding.

11. Repairs to sealed components

1) During repairs to sealed components, all electrical supplies shall be disconnected from the equipment being worked upon prior to any removal of sealed covers, etc. If it is absolutely necessary to have an electrical supply to equipment during servicing, then a permanently operating form of leak detection shall be located at the most critical point to warn of a potentially hazardous situation.

2)Sealed electrical components shall be replaced.

12. Repair to intrinsically safe components

Do not apply any permanent inductive or capacitance loads to the circuit without ensuring that this will not exceed the permissible voltage and current permitted for the equipment in use.

Intrinsically safe components must be replaced.
Replace components only with parts specified by the manufacturer. Other parts may result in the ignition of refrigerant in the atmosphere from a leak.

13. Cabling

Check that cabling will not be subject to wear, corrosion, excessive pressure, vibration, sharp edges or any other adverse environmental effects. The check shall also take into account the effects of aging or continual vibration from sources such as compressors or fans.

14. Detection of flammable refrigerants

Under no circumstances shall potential sources of ignition be used in the searching for or detection of refrigerant leaks. A halide torch (or any other detector using a naked flame) shall not be used. The following leak detection methods are deemed acceptable for all refrigerant systems. Electronic leak detectors may be used to detect refrigerant leaks but, in the case of FLAMMABLE REFRIGERANTS, the sensitivity may not be adequate, or may need re-calibration. (Detection equipment shall be calibrated in a refrigerant-free area.) Ensure that the detector is not a potential source of ignition and is suitable for the refrigerant used.
Leak detection equipment shall be set at a percentage of the LFL of the refrigerant and shall be calibrated to the refrigerant employed, and the appropriate percentage of gas (25 % maximum) is confirmed.
Leak detection fluids are also suitable for use with most refrigerants but the use of detergents containing chlorine shall be avoided as the chlorine may react with the refrigerant and corrode the copper pipe-work.
If a leak is suspected, all naked flames shall be removed/extinguished.
If a leakage of refrigerant is found which requires brazing, all of the refrigerant shall be recovered from the system, or isolated (by means of shut off valves) in a part of the system remote from the leak. Removal of refrigerant shall be according to Removal and evacuation.

15. Removal and evacuation

When breaking into the refrigerant circuit to make repairs -or for any other purpose -conventional procedures shall be used. However, for flammable refrigerants it is important that best practice be followed, since flammability is a consideration.
The following procedure shall be adhered to:

--Safely remove refrigerant following local and national regulations;
--Purge the circuit with inert gas(optional for A2L);
--Evacuate(optional for A2L);
--Continuously flush or purge with inert gas when using flame to open circuit ;a
--Open the circuit.

The refrigerant charge shall be recovered into the correct recovery cylinders if venting is not allowed by local and national codes. For appliances containing flammable refrigerants, the system shall be purged with oxygen-free nitrogen to render the appliance safe for flammable refrigerants. This process might need to be repeated several times. Compressed air or oxygen shall not be used for purging refrigerant systems. For appliances containing flammable refrigerants, refrigerants purging shall be achieved by breaking the vacuum in the system with oxygen-free nitrogen and continuing to fill until the working pressure is achieved, then venting to atmosphere, and finally pulling down to a vacuum (optional for A2L).

This process shall be repeated until no refrigerant is within the system (optional for A2L).
When the final oxygen-free nitrogen charge is used, the system shall be vented down to atmospheric pressure to enable work to take place.
The outlet for the vacuum pump shall not be close to any potential ignition sources, and ventilation shall be available.

16. Charging procedures

In addition to conventional charging procedures, the following requirements shall be followed.

- Ensure that contamination of different refrigerants does not occur when using charging equipment. Hoses or lines shall be as short as possible to minimise the amount of refrigerant contained in them.
- Cylinders shall be kept in an appropriate position according to the instructions.
- Ensure that the REFRIGERATING SYSTEM is earthed prior to charging the system with refrigerant.
- Label the system when charging is complete (if not already).
- Extreme care shall be taken not to overfill the REFRIGERATING SYSTEM. Prior to recharging the system, it shall be pressure-tested with the appropriate purging gas. The system shall be leak-tested on completion of charging but prior to commissioning. A follow up leak test shall be carried out prior to leaving the site.

17. Decommissioning

Before carrying out this procedure, it is essential that the technician is completely familiar with the equipment and all its detail. It is recommended good practice that all refrigerants are recovered safely. Prior to the task being carried out, an oil and refrigerant sample shall be taken in case analysis is required prior to re-use of recovered refrigerant.
It is essential that electrical power is available before the task is commenced.

a) Become familiar with the equipment and its operation.
b) Isolate system electrically.
c) Before attempting the procedure, ensure that:
- Mechanical handling equipment is available, if required, for handling refrigerant cylinders;
- All personal protective equipment is available and being used correctly;
- The recovery process is supervised at all times by a competent person;
- Recovery equipment and cylinders conform to the appropriate standards.

d) Pump down refrigerant system, if possible.
e) If a vacuum is not possible, make a manifold so that refrigerant can be removed from various parts of the system.
f) Make sure that cylinder is situated on the scales before recovery takes place.
g) Start the recovery machine and operate in accordance with instructions.
h) Do not overfill cylinders (no more than 80 % volume liquid charge).
i) Do not exceed the maximum working pressure of the cylinder, even temporarily.
j) When the cylinders have been filled correctly and the process completed, make sure that the cylinders and the equipment are removed from site promptly and all isolation valves on the equipment are closed off.
k) Recovered refrigerant shall not be charged into another REFRIGERATING SYSTEM unless it has been cleaned and checked.

18. Labelling

Equipment shall be labelled stating that it has been de-commissioned and emptied of refrigerant.

The label shall be dated and signed. For appliances containing FLAMMABLE REFRIGERANTS, ensure that there are labels on the equipment stating the equipment contains FLAMMABLE REFRIGERANT.

19. Recovery

When removing refrigerant from a system, either for servicing or decommissioning, it is recommended good practice that all refrigerants are removed safely.When transferring refrigerant into cylinders, ensure that only appropriate refrigerant recovery cylinders are employed. Ensure that the correct number of cylinders for holding the total system charge is available.

All cylinders to be used are designated for the recovered refrigerant and labelled for that refrigerant (i. e. special cylinders for the recovery of refrigerant). Cylinders shall be complete with pressure-relief valve and associated shut-off valves in good working order.

Empty recovery cylinders are evacuated and, if possible, cooled before recovery occurs.

The recovery equipment shall be in good working order with a set of instructions concerning the equipment that is at hand and shall be suitable for the recovery of the flammable refrigerant. If in doubt, the manufacturer should be consulted. In addition, a set of calibrated weighing scales shall be available and in good working order. Hoses shall be complete with leak-free disconnect couplings and in good condition.

The recovered refrigerant shall be processed according to local legislation in the correct recovery cylinder, and the relevant waste transfer note arranged. Do not mix refrigerants in recovery units and especially not in cylinders.

If compressors or compressor oils are to be removed, ensure that they have been evacuated to an acceptable level to make certain that flammable refrigerant does not remain within the lubricant.

The compressor body shall not be heated by an open flame or other ignition sources to accelerate this process. When oil is drained from a system, it shall be carried out safely.

Recycling

This mark indicates that this product should not be disposed of with other household wastes. To prevent possible environmental or human health harm from uncontrolled waste disposal, please recycle it responsibly to promote the sustainable reuse of material resources.



Safety Precautions

- Position the dehumidifier on a flat, stable surface to minimize vibration and noise.
- Do not operate in standing water. Ensure the motor and wiring stay dry. Never immerse the dehumidifier in water or other liquids.
- Keep the dehumidifier away from heat sources, flammable materials, and chemicals.
- Inspect the power cord before use. Do not operate with a damaged cord or plug. Do not modify the power cord.
- Ensure the dehumidifier is plugged into a properly grounded 120V~ 60Hz mains socket with a minimum 14-amp rating. Do not use an extension lead to power the dehumidifier.
- Always use the control panel to switch the dehumidifier on/off. Do not unplug to power off.
- Always turn off and unplug before cleaning or storing, Grasp the plug, not the cord, to disconnect.
- This dehumidifier is for adult use only. Ensure children do not play with the dehumidifier.
- This dehumidifier is not intended for use by individuals with reduced physical, sensory, or mental capabilities unless supervised by a responsible person.
- Do not tilt the dehumidifier while in operation to prevent water spillage.
- Do not insert fingers or other objects into the air inlet or outlet.
- Avoid placing heavy objects on the dehumidifier.
- If unusual noises, smells, or smoke occur, disconnect power immediately.
- If the supply cord is damaged, please contact the manufacturer via service@moiswell.com for support.
- The appliance shall be installed in accordance with national wiring regulations.
- The applicable operating temperature range for this dehumidifier is 41℉ -95℉ .

Parts Identification

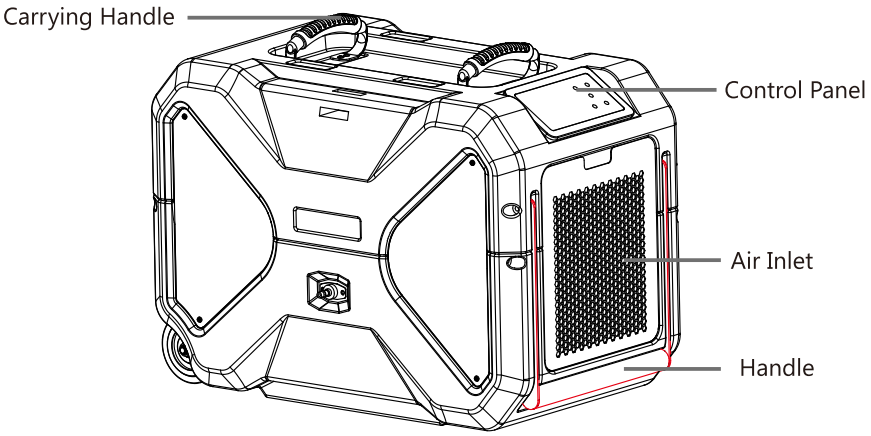

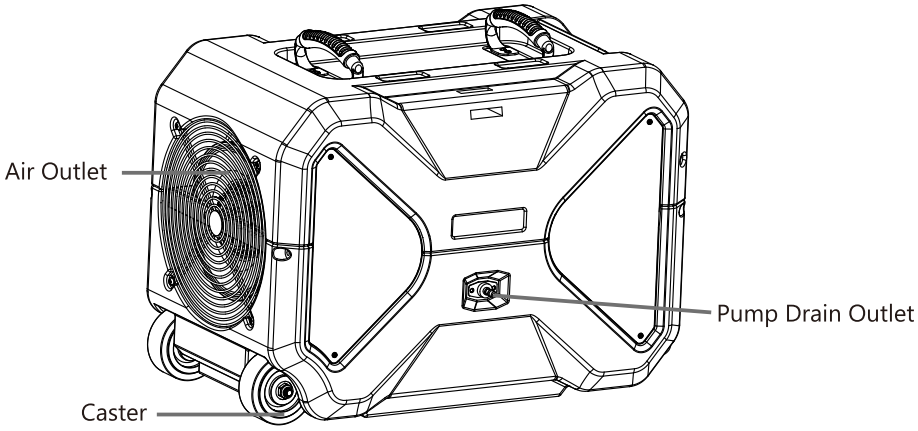

Note: Do not obstruct the air inlet and/or outlet.

Operation Instructions

1. Move the Dehumidifier

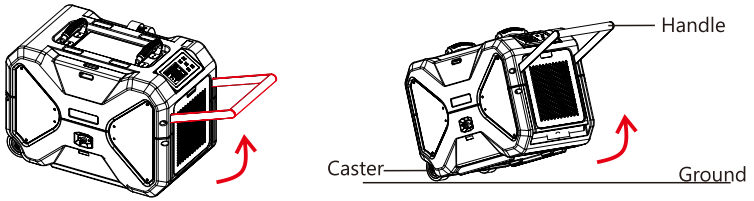

(1) Lift the handle.
(2) While holding the handle, gently raise the dehumidifier off the ground.
(3) Pull the dehumidifier forward and move it to the desired location.
Note: Avoid tilting the dehumidifier more than 45° while moving. If the dehumidifier is tilted beyond 45° during movement, allow it to stand upright for at least 30 minutes before powering it on to ensure proper refrigerant settling.

2. Position Your Dehumidifier

(1) Place the dehumidifier on a flat, stable surface to reduce vibration and noise.
(2) Maintain at least 6 ft of clearance around the dehumidifier. Ensure nothing blocks the air inlet or outlet.
(3) For best performance, operate the dehumidifier in a closed space. Keep all doors and windows shut during operation.

3. Set the Drain Hose

The dehumidifier features a built-in pump designed for upward drainage and comes with a 16.4 ft drain hose for convenient water removal.

To set up the drain hose:

- Securely attach the provided drain hose to the pump drain outlet. If using an alternative hose (inner diameter 0.2 in / 5 mm), ensure it fits tightly to prevent leaks.
- Position the other end of the hose in a sink, floor drain, sump pit, or outside a window—any location where water can drain safely.
- Make sure the hose is free from kinks, twists, or blockages to allow smooth water flow.

Note:

- The pump automatically activates when the internal water level reaches a certain point.
- Use the Purge function by holding the Power button for at least 5 seconds to manually activate the pump—useful before moving or storing the dehumidifier to prevent spills or mould.
- If the dehumidifier fails to drain automatically, contact service@moiswell.com for support.
- The pump can drain water vertically up to 16.4 ft. Exceeding this height may cause water backup or leakage.

• Avoid using an excessively long hose, as it may lead to incomplete drainage and mould growth.
• If draining into a bucket or container, check it regularly to prevent overflow.

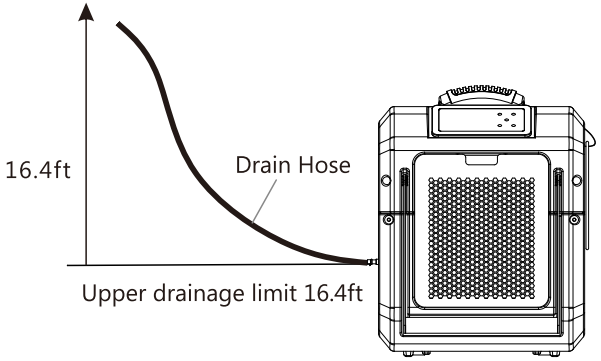

4. Plug in Electrical Cord

IMPORTANT

Please let the dehumidifier stand upright for **24 hours** before plugging in for the first time. During the shipping process, the dehumidifier may have been subjected to tilting or even placed upside down, which can cause the oil in the compressor to become unsettled. Hence, kindly make sure to follow this crucial step before using the dehumidifier.

To properly operate the dehumidifier, please plug it into a GFCI-protected 120-volt outlet with a rating of at least 14 amps. Uncoil the power cord and securely connect it to an appropriate outlet.
Note: When the dehumidifier is first plugged into AC power, the control panel display will light up for a second, which is part of the dehumidifier's self-diagnosis procedure and no action is required. This indicates that the dehumidifier is functioning correctly and ready to operate effectively. You will still need to press the POWER button to turn the dehumidifier on.

5. Understand the Control Panel
The control panel of the dehumidifier features a user-friendly interface with 4 buttons and an LED screen. Press the POWER Button to turn the dehumidifier on. After turning on the dehumidifier, the LED screen will display the readouts. If not been operated for over 50 seconds, the control panel will become dim until pressed buttons again.

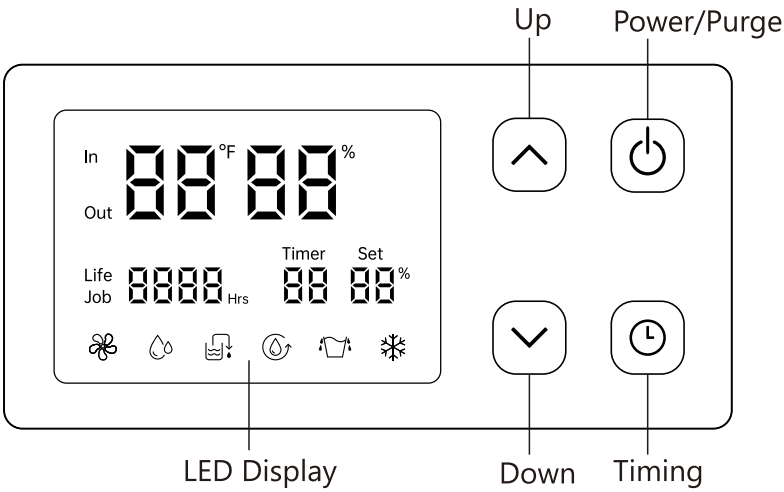

Inlet/Outlet Air Temperature & Humidity Reading

By default, these numbers show the inlet air temperature and humidity reading, and the "In" icon lights up. To check the outlet air temperature and humidity reading, press and hold the ^ button for 5 seconds. The "Out" icon will light up. After 5 seconds, it automatically returns to the inlet air reading.

Current/Total Operating Hours

By default, the display shows the current operating hours (also called job hours)—the total time the dehumidifier has run since it was turned on. The "Job" icon lights up.
To view the total (lifetime) operating hours, press and hold the v button for about 5 seconds. The "Life" icon lights up. After 5 seconds, it automatically returns to the current operating hours.

Note:

The maximum total operating time display is 9999 hours. When the total exceeds 9999 hours, the counter automatically resets to 0000 and resumes counting.

Timer Display

This number displays the timer settings when the timer function is enabled and stays off when the timer function is disabled.

Humidity Setting

This number displays the humidity setting.

The fan icon lights up when the fan is running and lights off when the fan stops.

 This water droplet icon lights up when the compressor is running and lights off when the compressor stops.

Note: It is normal for the water droplet icon does not light up, which indicates the compressor is not running, in the following situations:

- The humidity set-point is not at least 3%(recommended 5%) lower than the inlet air humidity reading. Check your setting.
- The dehumidifier was just turned on; the compressor may take a few seconds to start.
- The room humidity has reached the set-point, and the dehumidifier stops and enters standby mode.
- The dehumidifier was restarted recently; the compressor is in 3-minute delay protection mode.

 The pump icon lights up when the pump is running and lights off when the pump stops (standby).

 The continuous running icon lights up when the humidity setting is 10%, indicating the dehumidifier will run continuously.

 This water-full icon lights up when the pump fails to drain automatically, causing the internal water reservoir to become full. Please contact service@moiswell.com for assistance. Once the issue is resolved, the icon will turn off automatically.

 The defrost icon lights up when the dehumidifier detects frost on the coils. The dehumidifier will automatically stop dehumidifying and begin defrosting.

During defrosting, the fan operates while the compressor does not, and the defrost icon lights up until the frost melts. The dehumidifier resumes normal operation, and the defrost icon lights off automatically once defrosting is complete.

Note: Frequent defrosting may indicate that the room temperature is too low. For optimal drying, maintain the room temperature above 65°F.

Button	Function
	• Press to turn the dehumidifier on or off. • Press and hold for 5 seconds to activate the pump to drain (purge function). **Note:** The dehumidifier will automatically drain condensate water when the internal water reservoir reaches a near-full level. If it does not drain automatically, please contact service@moiswell.com for assistance. Use the **Purge** function to manually drain the internal water only before moving the dehumidifier to avoid leaks, or before storing it to prevent mold.
	• Press to increase the humidity setting, or increase the timer value in timer setting mode. • Press and hold for 5 seconds to check the outlet air temperature and humidity reading.
	• Press to decrease the humidity setting, or decrease the timer value in timer setting mode. • Press and hold for 5 seconds to check the total operating hours.
	Press to enter timer setting mode.

6. General Operation Instructions

(1) Turn on the dehumidifier

Press the Power Button to turn on the dehumidifier.

(2) Set Your Target Humidity Value

• **Check the current humidity:** Look at the inlet air humidity reading on the top left of the display.

• **Adjust the target humidity:** Press the  or  button to select a target humidity between 10% and 90% in 1% increments. The number under the Set icon ( bottom right of the display) changes as you adjust. The target humidity must be 3% (recommended 5%)lower than the inlet air humidity reading.

• **Confirm the setting:** After selecting your target humidity, wait 5 seconds for the setting to register.

Automatic Operation:

The dehumidifier will cycle on and off to maintain room humidity within ±3% of the target:

- When inlet air humidity drops to 3% below the target, the dehumidifier enters standby mode — compressor and fan stop.
- When inlet air humidity rises to 3% above the target, the dehumidifier automatically restarts and runs until it again reaches 3% below the set level.

Notes:

- The target humidity should be 3% lower than the current room humidity. Otherwise, the dehumidifier will remain in standby mode until room humidity rises 3% above the target.
- To run the dehumidifier continuously, set the target humidity to 10% to activate Continuous Mode.

(3) Turn the dehumidifier off

Press the Power Button to turn off the dehumidifier.

Note: To protect the compressor, the fan will continue to operate for 30 seconds after the dehumidifier shuts off. Use the power button to stop the dehumidifier rather than forcibly by disconnecting the power cord.

7. Timer Setting

It enables you to either delay the auto-on or auto-off function of the dehumidifier from 1 to 24 hours.

-Set AUTO-ON: When the dehumidifier is off, press the Timer button to set a desired time it begins to work.

-Set the dehumidifier AUTO-OFF: When the dehumidifier is on, press the Timer button to set a desired time it shuts off.

Set the TIMER by the Below Steps

(1) Press the Timer Button and the Timer icon and value Timer 88 lights up and flashes.

(2) Adjust the timer setting by pressing the ⌃ or ⌄ button to change the timer at 1-hour increment up to 24 hours.

(3) After selecting the target time period, just wait for about 5 seconds to let the setting register automatically.

(4) The digital readout will count down the remaining time until the dehumidifier either starts or stops.

(5) To disable the timer function, manually turn the dehumidifier on/off, or set the timer to Timer 00.

- To set the AUTO ON TIMER:

First, ensure the dehumidifier is plugged in and turn it on to select your desired humidity level. Then, turn it off and proceed with the timer setting.

Note: If you skip setting the humidity level, the previous setting will be used.

- Set AUTO ON timer only when the dehumidifier is off or set AUTO OFF timer when the dehumidifier is on, but not be able to set both AUTO ON and AUTO OFF timer at the same time.
- The AUTO ON/OFF function won't be cycling.
- The TIMER function will be disabled when the dehumidifier was powered on/off manually.
- Set the timer as Timer 00 , the timer function will not be activated.

8. Smart Functions

(1) Compressor Delay Start

To protect internal components, the compressor includes a 3-minute delay after each cycle or power interruption. If the dehumidifier is restarted immediately, the compressor will resume operation after this 3-minute delay.

(2) Auto Defrost

If the temperature drops below 65°F, frost may form on the coils. When this happens, the dehumidifier will automatically pause the compressor and run the fan to defrost. The Defrost icon will light up. Once the frost has cleared, the dehumidifier will resume normal operation.

(3) Auto Restart

If a power outage occurs while the dehumidifier is running, it will automatically restart with the previous settings (excluding the timer) once power is restored.

Maintenance

Ensure the dehumidifier is turned OFF and the plug is removed from the power socket before cleaning or maintenance is carried out.

(1) Cleaning the Dehumidifier

To clean the dehumidifier body, use a soft damp cloth. Do not submerge or pour water on the dehumidifier or control panel, as water can damage the electronic components. Avoid using chemical solvents such as benzene, alcohol, gasoline, or heavy-duty cleaners, as they can damage or deform the surface.

(2) Cleaning the Air Filter

The air filter requires regular cleaning to maintain the dehumidifier's performance. Clean the air filter every 2 weeks, or more frequently if there's a significant amount of dander or fur in the air.

Follow the below steps to maintain the filter

• Open the intake grill with magnets, pull it out, then take out the filter;

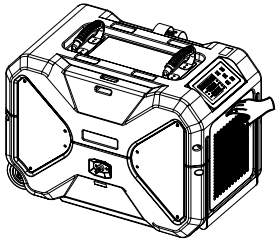

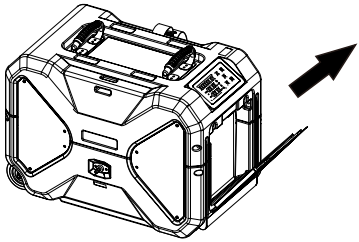

• Use a vacuum cleaner with a soft brush to remove any large debris or dust build-up from the filter.

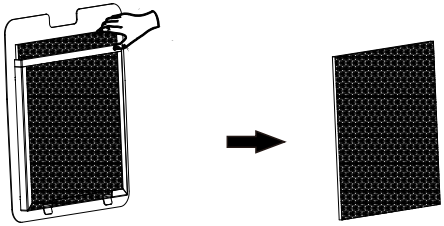

(3) Store the Dehumidifier

When Not Using the Dehumidifier for Long Periods of Time

- Turn off the dehumidifier and wait one day. Then press and hold the Power button for 5 seconds to activate the pump and purge any remaining water.
- Clean the dehumidifier and air filter thoroughly, ensuring that the dehumidifier is dry before storing it.
- Wrap the cord and hose and bundle them up to keep them safe.

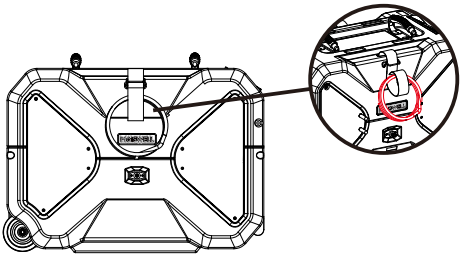

Drain Hose Storage

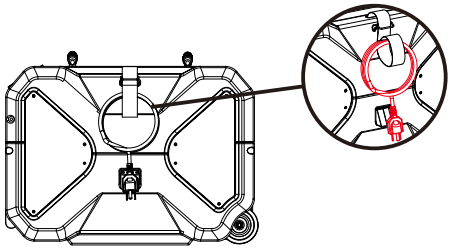

Power Cord Storage

- Cover the dehumidifier with a plastic bag.
- Store the dehumidifier upright in a dry, well-ventilated place.

Trouble Shooting Guide

Below chart will help you solve common problems may occur. If the problem coming across can not be fixed after troubleshooting or not being listed in the below trouble shooting chart, please contact **MOISWELL** customer service to get professional support at service@moiswell.com.

Problem	Possible Cause	Solution
Dehumidifier does not operate	No power to dehumidifier	Plug it into a working outlet
	Not turned on	Turn the dehumidifier on
	Has not set it properly	Make sure the set humidity level is at least 3%(recommended 5%) than the inlet humidity reading
	Error code displays	Contact customer service
Dehumidifier collects little water	Too low humidity level	Try again until the humidity level exceeds 40%
	Insufficient working time	Allow more working time
	Filter is blocked	Clean filter
	Air Inlet or Outlet is blocked	Clear the obstructions
	Low ambient temperature	Heat up the room
	Condensate hose is blocked	Check hose for restrictions
Dehumidifier operating, but room not dry	Doors and windows are open	Seal room from external areas
Abnormal Noise	The dehumidifier has not been placed properly	Place the dehumidifier in a horizontal position
	Filter is blocked	Clean filter

Problem	Possible Cause	Solution
Humidity reading remains at 10%RH, (far from the actual room humidity)	Humidity sensor failure	Set the target humidity percentage value at 10%RH, the dehumidifier works normally, which means this failure does not affect the function of this dehumidifier.
		Repair and replace the humidity sensor.
Humidity reading remains at "99%RH" (far from the actual room humidity)	Water on the surface of the humidity sensor	Please let the dehumidifier work for a period of time, the humidity reading will get normal after the water on the surface of the humidity sensor is evaporated.
	Humidity sensor failure	The dehumidifier works normally, which means this problem does not affect the function of this dehumidifier.
		Repair and replace the humidity sensor.

Note: It is normal that the dehumidifier pulls warm air out.

WARRANTY

This warranty applies only to products purchased from MOISWELL or its authorized dealers and must be installed, operated, and maintained according to the provided instructions.

2 Years Full Warranty (1 year standard + 1 year with product registration)
MOISWELL warrants to the original purchaser that this product is free from defects in materials and workmanship for 2 years from the date of purchase. During this period, MOISWELL will, at its discretion, repair or replace any defective parts or units. In rare cases where repair or replacement is not feasible, a refund may be issued as a last resort.

5-Year Limited Warranty on Refrigeration System
The refrigeration system—including compressor, condenser, and evaporator—is warranted against defects in materials or workmanship for five years from the purchase date. Labor and shipping costs are excluded after the initial two-year full warranty period.

Note: If the dehumidifier is replaced, the warranty period for the replacement dehumidifier continues from the original purchase date.

Exclusions
This warranty does not cover:
(1) Damage resulting from:
- Normal wear and tear
- Misuse, abuse, accidents, or failure to follow the operating instructions
- Exposure to liquids or foreign particles
- Unauthorized servicing or modifications

(2) Second-hand products or products purchased through liquidation sales.
(3) Products purchased from unauthorized dealers.

Need Help?
Although these terms define our warranty coverage, we encourage customers to reach out with any concerns—even if the product is out of warranty. We are committed to providing the best possible support.

For any questions or issues, please reach out to Moiswell Customer Service as follows:

Email: service@moiswell.com
Official Website: www.moiswell.com
& : Available on moiswell.com

Dehumidify Like a Pro with Moiswell !

3070400601 2D307-03316(00)