KOHLER®

Roughing-In

K-11575 SERIES
LOURE™
ACCESSORIES

Product Information

Applicable product:	
Knob	K-11575
Pull	K-11576
Towel shelf assembly	K-11577
18″ (457 mm) towel bar	K-11580
24″ (610 mm) towel bar	K-11581
Double towel bar	K-11582
Toilet tissue holder, vertical	K-11583
Toilet tissue holder, covered	K-11584
Robe hook	K-11585
Towel arm assembly	K-11586
Towel ring	K-11587
30″ (762 mm) towel bar	K-11588
Soap dish	K-11595
Container	K-11596
Tray	K-11597
Tumbler	K-11598

Installation Notes

CAUTION: Risk of personal injury. Do not install these products in any area where they are likely to be used inadvertently as a grab bar or support bar. These products are not designed or intended for use as a grab bar or support bar.
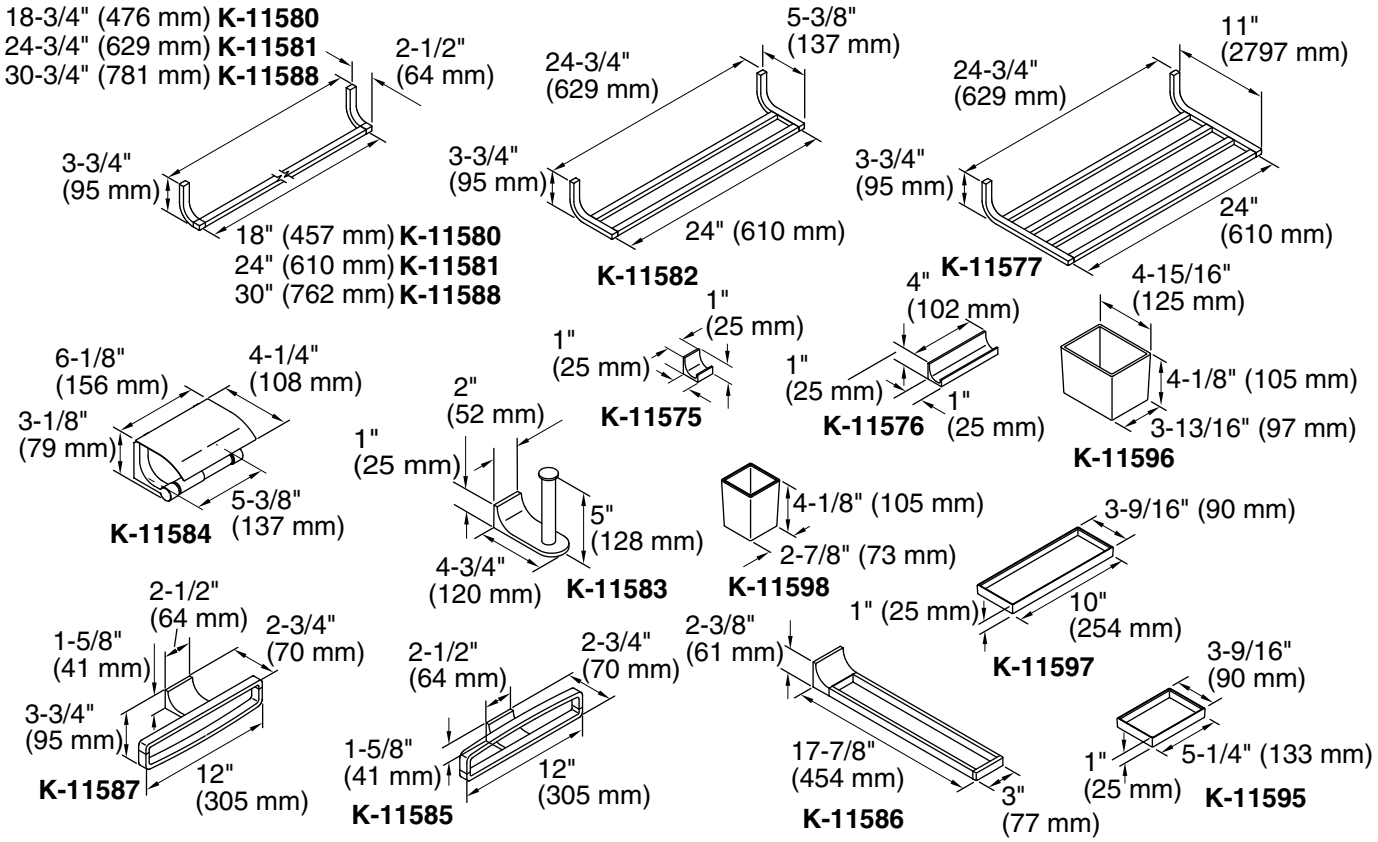
Install this product according to the installation guide.