INSTALLATION GUIDE

UNDERMOUNT

STAINLESS STEEL KITCHEN SINK

ENGLISH

IF YOU HAVE PURCHASED A **UNDERMOUNT SINK**, PLEASE MAKE SURE TO READ THESE INSTRUCTIONS CAREFULLY

1

Prior to installation:

Make sure that you have all necessary parts by checking the parts list. If any part is missing, please contact Stylish® Customer Service at +1-855-789-5352 for a replacement.

Inspect the sink prior to installation to make sure that it has not been damaged during shipping.

You may use the cut-out template provided or download DXF file from www.stylishkb.com, the file is available under each sink model.

Observe all plumbing and building codes according to your state requirements.

Not recommended to be installed with laminate countertop.

2

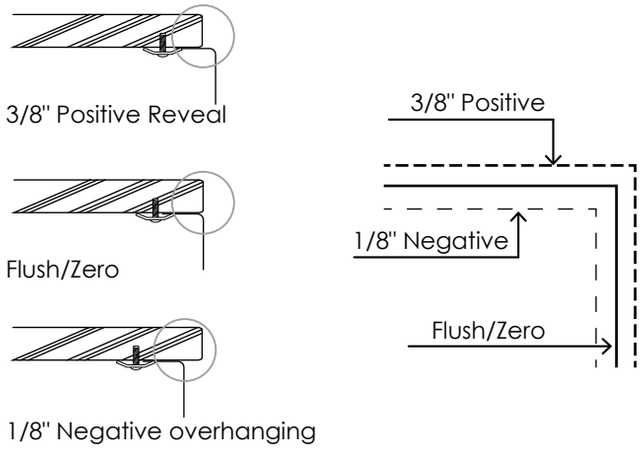

Use scissors to cut along the line of the paper template for you desired reveal type (Negative, Positive or Flush Reveal)

3

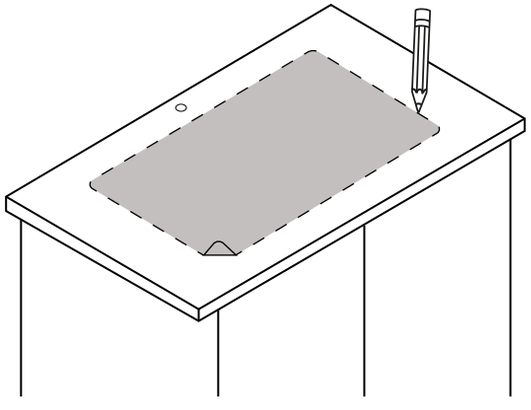

Place cut-out template in desired position on countertop locating center of the bowl over cabinet.

Note: Sink installation is normally performed by the countertop provider.

4

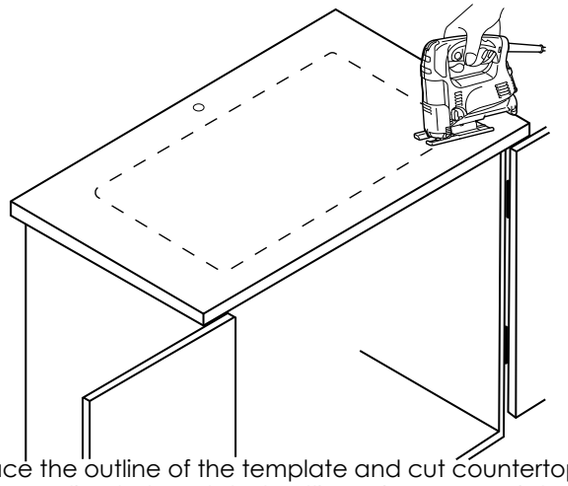

Trace the outline of the template and cut countertop according to templated outline using appropriate cutting tools. Template is for guide only. Use physical sink to ensure accurate cut-out opening.
It is recommended to use the actual sink dimensions to ensure the most accurate cut out.
Drawing or template are for reference.

WARRANTY

For additional technical assistance or for any questions or concerns about your kitchen sink's warranty, please contact us.

www.stylishkb.com/warranty

www.stylishkb.com care@stylishkb.com +1-855-789-5352

Products and specifications shown are subject to change without notice. Please contact our technical support at care@stylishkb.com for any further queries, replacement parts requests, etc. ©2021 Stylish® all right reserved.

INSTALLATION GUIDE

UNDERMOUNT

STAINLESS STEEL KITCHEN SINK

ENGLISH

5

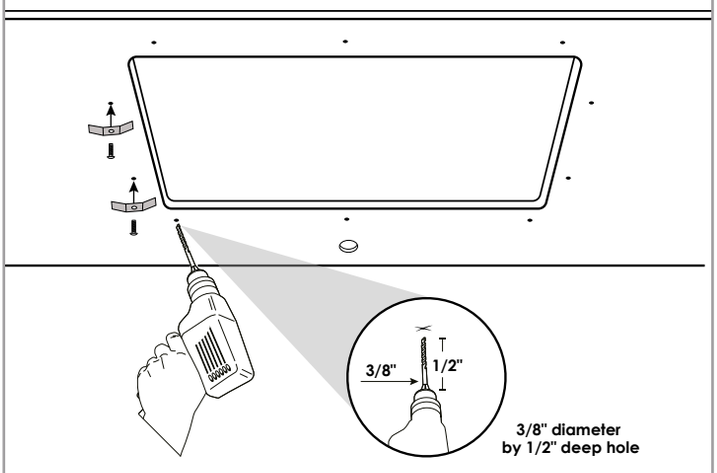

Drill holes on the underside of the countertop, approximately 1/2" from edge of the sink to be installed. Holes should be evenly spaced approximately 6" to 8" apart starting from every corner as shown below.

6

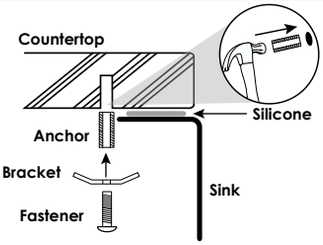

Option 1. Insert anchors under the countertop on the drilled holes, so they are ready to fasten the sink flange. Anchors should be inserted with a hammer until flush.

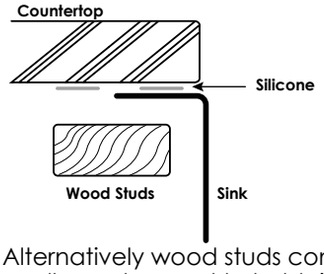

Option 2. Alternatively wood studs combined with silicone caulk can be used to hold sink against countertop without using mounting brackets.

7

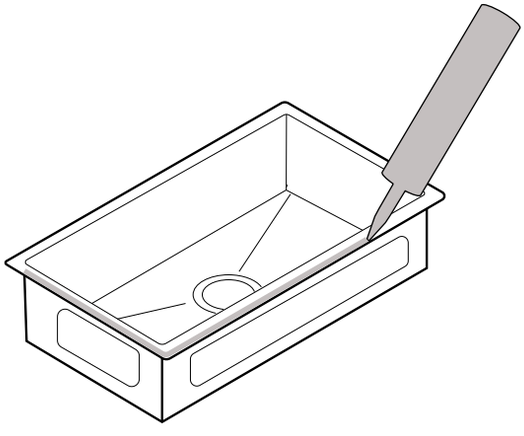

Clean sink flange and underside of cut-out area of countertop, making sure that the area is smooth and free of debris. Apply continuous bead of silicone caulk evenly on top of sink flange.

8

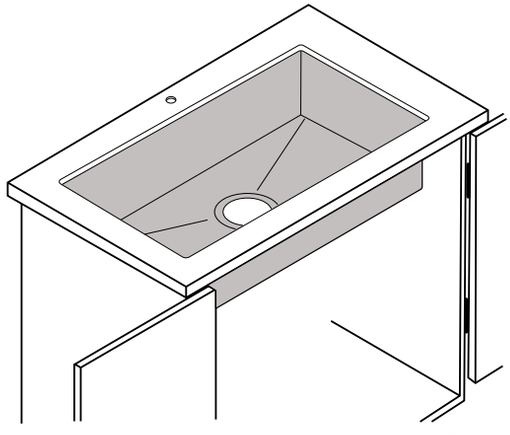

Check alignment of sink again and tighten fasteners to secure sink. Wipe away excess silicone caulk with damp cloth. Connect drain and water supply according to manufacturer's instruction.

Note: If sink is installed using **Option 2** it will require special means to hold sink in place while adhesive silicone cures.

CARE AND CLEANING

1. Rinse the sink with water.
2. Coat the sink with baking soda, Flitz or Barkeepers friend.
3. With sponge, scrub all sink walls in the direction of the steel grain.
4. Spray on undiluted vinegar.
5. Rinse again.
6. Buff with a few drops of olive oil.
7. If necessary, repeat procedure.
8. We recommend the use of a stainless steel bottom grid that will protect the sink from scratches that could be caused by the utensils and pots.

Products and specifications shown are subject to change without notice. Please contact our technical support at care@stylishkb.com for any further queries, replacement parts requests, etc. ©2021 Stylish® all right reserved.

INSTALLATION GUIDE

DROP-IN

STAINLESS STEEL KITCHEN SINK

ENGLISH

IF YOU HAVE PURCHASED A **DROP-IN SINK**, PLEASE MAKE SURE TO READ THESE INSTRUCTIONS CAREFULLY

1

Prior to installation:

Make sure that you have all necessary parts by checking the parts list. If any part is missing, please contact Stylish® Customer Service at +1-855-789-5352 for a replacement.

Inspect the sink prior to installation to make sure that it has not been damaged during shipping.

You may use the cut-out template provided or download DXF file from www.stylishkb.com, the file is available under each sink model.

Observe all plumbing and building codes according to your state requirements.

2

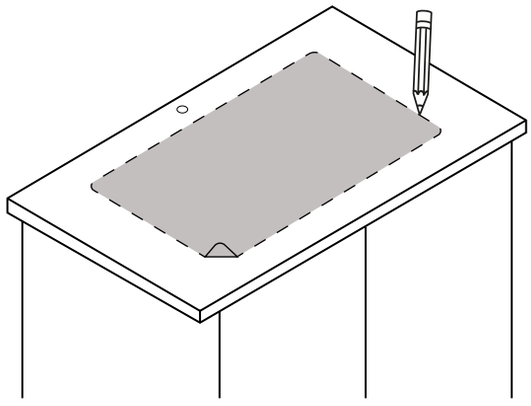

Place cut-out template in desired position on countertop locating center of the bowl over cabinet.

3

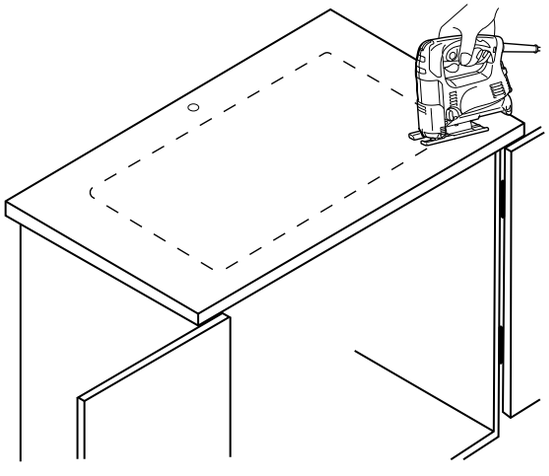

Trace the outline of the template and cut countertop according to templated outline using appropriate cutting tools. Template is for guide only. Use physical sink to ensure accurate cut-out opening.

4

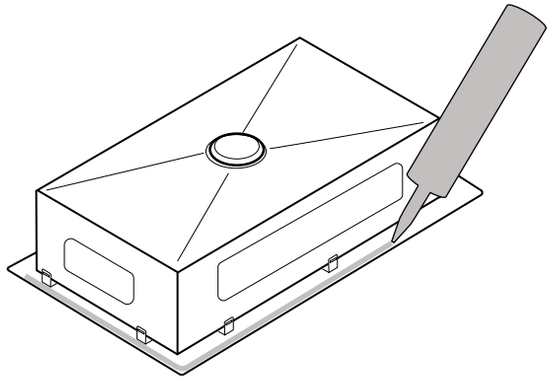

Clean sink flange and underside of cut-out area of countertop, making sure that the area is smooth and free of debris. Apply continuous bead of silicone.

WARRANTY

For additional technical assistance or for any questions or concerns about your kitchen sink's warranty, please contact us.

www.stylishkb.com/warranty

www.stylishkb.com care@stylishkb.com +1-855-789-5352

Products and specifications shown are subject to change without notice. Please contact our technical support at care@stylishkb.com for any further queries, replacement parts requests, etc. ©2023 Stylish® all right reserved.

INSTALLATION GUIDE

DROP-IN

STAINLESS STEEL KITCHEN SINK

ENGLISH

5

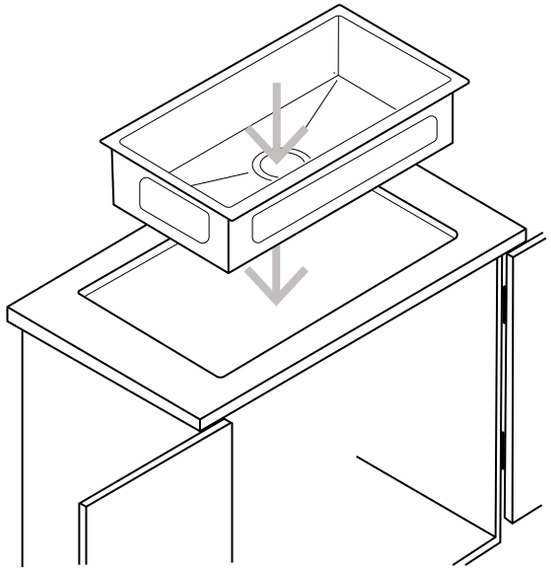

Drop-in on countertop opening.

6

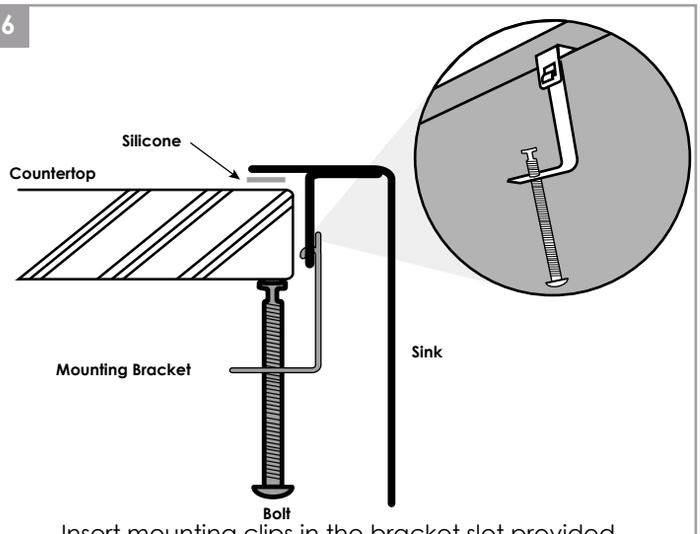

Insert mounting clips in the bracket slot provided, distribute clips evenly around the sink periphery, there may be more sink brackets than clips, the amount of clips provided are enough to provide optimal sink clamping to countertop.

7

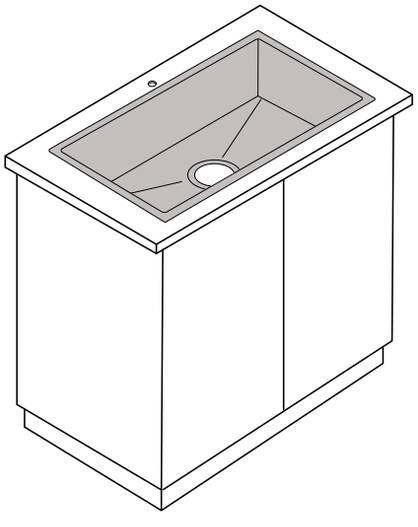

Check alignment of sink again and tighten fasteners to secure sink. Wipe away excess silicone caulk with damp cloth. Connect drain and water supply according to manufacturer's instruction.

CARE AND CLEANING

1. Rinse the sink with water.
2. Coat the sink with baking soda, Flitz or Barkeepers friend.
3. With sponge, scrub all sink walls in the direction of the steel grain.
4. Spray on undiluted vinegar.
5. Rinse again.
6. Buff with a few drops of olive oil.
7. If necessary, repeat procedure.
8. We recommend the use of a stainless steel bottom grid that will protect the sink from scratches that could be caused by the utensils and pots.

Products and specifications shown are subject to change without notice. Please contact our technical support at care@stylishkb.com for any further queries, replacement parts requests, etc. ©2023 Stylish® all right reserved.

ALBA
K-151
FOLDING FAUCET

BEFORE YOU BEGIN YOUR INSTALLATION

- Shut off water supply
- Flush hot and cold water supply lines
- Required tools
- Installation by License Professional Plumber
- Flush the water pipe before installation
- Drawings are for reference only
- Do not disassemble the body

FAUCET INSTALLATION

1

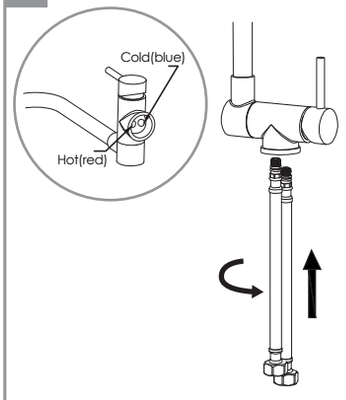

Manually connect the supply hoses, ensuring the red mark aligns with hot water hose and the blue mark aligns with cold water hose.

2

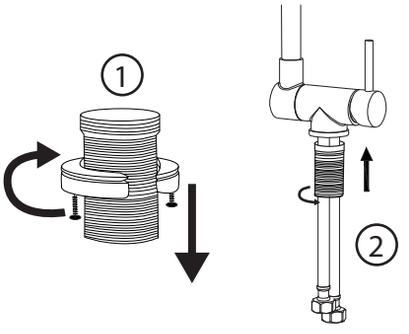

1)Remove the mounting nut from the shank.
2)Thread the shank onto the faucet base and tighten it firmly

3

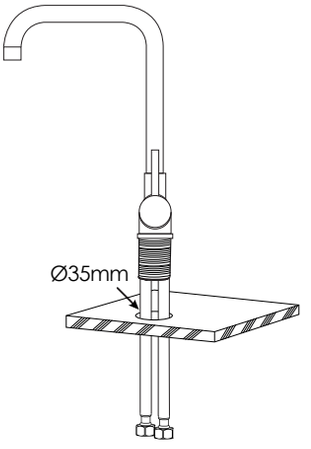

Ensure there is a Ø35mm through-hole on the counter. Position and insert faucet into faucet countertop hole.

4

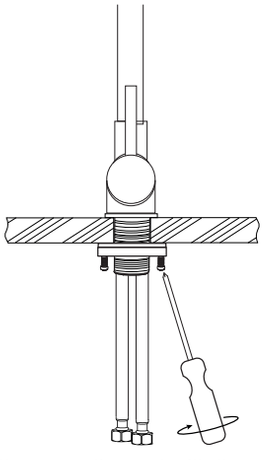

Tighten the mounting nut with the screws until faucet is firmly secure.

5

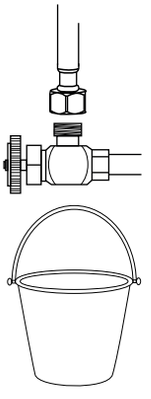

Before connecting supply hose, flush supply valves to clear any debris. Place a bucket underneath valves and run water for 5 to 10 seconds. Turn water off.

6

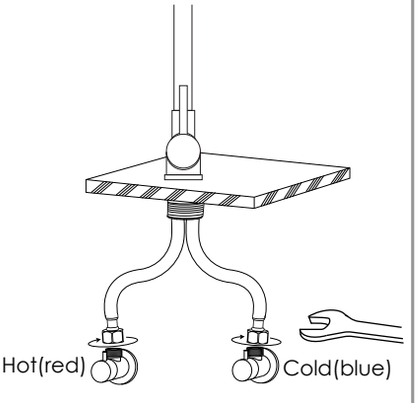

Connect hot and cold water lines to the inlet pipe and tighten with a wrench until snug.
Do not over tight.

CARE AND CLEANING

Clean the faucet frequently using mild soap or an on-abrasive cleaner and then quickly rinse with water and dry with soft cloth only.

Using abrasive cleaners, solvents, acid cleaners or any scrubbing detergent, polisher or scraper will damage the finish and void the warranty.

WARRANTY

For additional technical assistance or for any questions or concerns about your bathroom faucet's warranty, please contact us.

www.stylishkb.com/warranty

www.stylishkb.com
care@stylishkb.com
+1-855-789-5352

Stylish International Inc. Follow us on Instagram! Check out and let us know your comments stylish.international.inc

Products and specifications shown are subject to change without notice. Please contact our technical support at care@stylishkb.com for any further queries, replacement parts requests, etc. **©2021 Stylish® all right reserved.**