Decorative | K-26525

Double robe hook

Features

- Double hook holds multiple items securely
- Coordinates with traditional-style KOHLER® faucets and showering components



DISCONTINUED

1-800-4KOHLER (1-800-456-4537)
Kohler Co. reserves the right to make revisions without notice to product specifications.
For the most current specification sheet, go to www.kohler.com USA or www.kohler.ca Canada.
4-15-2026 5:44 - US-CA

THE BOLD LOOK OF KOHLER®

Codes/Standards

None Applicable

Material

- Premium metal construction for durability and reliability
- KOHLER finishes resist corrosion and tarnishing

Warranty

See website for detailed warranty information.

KOHLER® Faucet Lifetime Limited Warranty

DISCONTINUED

1-800-4KOHLER (1-800-456-4537)
Kohler Co. reserves the right to make revisions without notice to product specifications.
For the most current specification sheet, go to www.kohler.com USA or www.kohler.ca Canada.
4-15-2026 5:44 - US-CA

THE BOLD LOOK OF KOHLER.

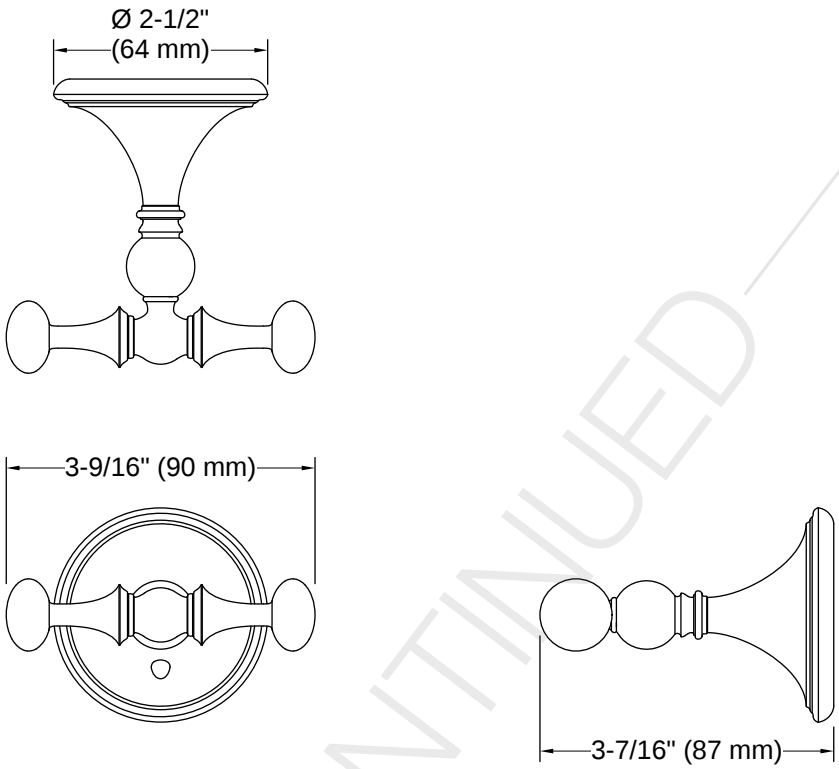

DISCONTINUED

Installation Notes

Install this product according to the installation instructions.

1-800-4KOHLER (1-800-456-4537)
Kohler Co. reserves the right to make revisions without notice to product specifications.
For the most current specification sheet, go to www.kohler.com USA or www.kohler.ca Canada.
4-15-2026 5:44 - US-CA

THE BOLD LOOK OF KOHLER.