Spare parts list

# Bosch Climate 5000 Series - Gen 4 Multi Zone Outdoor Unit

## BMS500-AAM018-1CSXRD

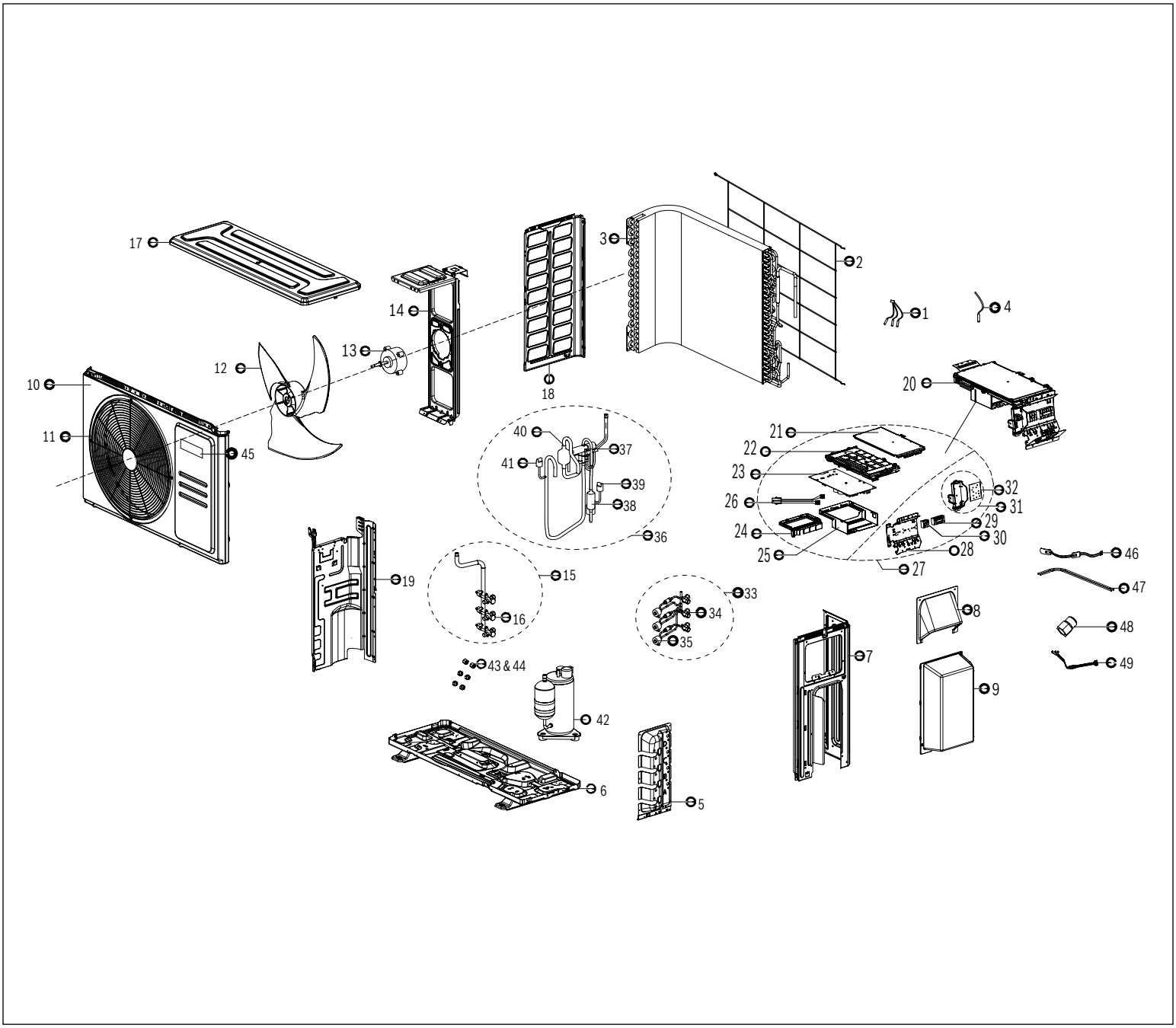


BOSCH




Bosch Thermotechnology Corp.
Tel: 1-800-283-3787
www.bosch-homecomfort.us

| Pos. | Description | Qty | BMS500-AAM018-1CSXRD | Recommended Stock | Remarks |
|---|---|---|---|---|---|
| 1 | Combination sensor | 1.0 | 8733979544 | ✓ | |
| 2 | Rear net | 1.0 | 8733956445 | | |
| 3 | Condenser | 1.0 | 8733956438 | ✓ | |
| 4 | Pipe temperature sensor | 1.0 | 8733979545 | | |
| 5 | Valve plate | 1.0 | 8733956535 | | |
| 6 | Chassis assembly | 1.0 | 8733956536 | | |
| 7 | Right clapboard | 1.0 | 8733956537 | | |
| 8 | Big handle | 1.0 | 8733945579 | | |
| 9 | Water collector | 1.0 | 8733956538 | | |
| 10 | Front panel | 1.0 | 8733976902 | | |
| 11 | Air outlet grille | 1.0 | 8733956434 | | |
| 12 | Axial flow fan | 1.0 | 8733956435 | ✓ | |
| 13 | Brushless DC motor | 1.0 | 8733976903 | ✓ | |
| 14 | Motor bracket | 1.0 | 8733956437 | | |
| 15 | Gas valve assembly | 1.0 | 8733979547 | ✓ | |
| 16 | Gas valve | 3.0 | 8733979548 | | |
| 17 | Top cover | 1.0 | 8733956440 | | |
| 18 | Left supporter | 1.0 | 8733956439 | | |
| 19 | Partition board | 1.0 | 8733956540 | | |
| 20 | Electronic control box subassembly | 1.0 | 8733979549 | | |
| 21 | Cover of electronic control box | 1.0 | 8733956542 | | |
| 22 | Electronic installing box | 1.0 | 8733956543 | | |
| 23 | Main control board | 1.0 | 8733979550 | ✓ | |
| 24 | Support of electronic control box | 1.0 | 8733956545 | | |
| 25 | Electronic installing box | 1.0 | 8733956546 | | |
| 26 | HV junction cable | 1.0 | 8733979551 | | |
| 27 | Terminal board subassembly | 1.0 | 8733979552 | ✓ | |
| 28 | Terminal board | 1.0 | 8733956548 | | |
| 29 | Terminal | 3.0 | 8733969136 | ✓ | |
| 30 | Wire joint | 1.0 | 8733969112 | ✓ | |
| 31 | Key board box | 1.0 | 8733979599 | | |
| 32 | Key board | 1.0 | 8733979600 | | |
| 33 | Liquid valve assembly | 1.0 | 8733979601 | ✓ | |
| 34 | High pressure valve | 3.0 | 8733980952 | | |
| 35 | Electronic expansion valve | 3.0 | 8733979602 | ✓ | |
| 36 | 4-Way valve assembly | 1.0 | 8733979603 | ✓ | |
| 37 | 4-Way valve | 1.0 | 8733969247 | ✓ | |
| 38 | Muffler | 1.0 | 8733956552 | | |
| 39 | Pressure controller | 1.0 | 8733976946 | ✓ | |
| 40 | Muffler | 1.0 | 8733979604 | | |
| 41 | Pressure switch | 1.0 | 8733979605 | ✓ | |

## BMS500-AAM018-1CSXRD

| Pos. | Description | Qty | BMS500-AAM018-1CSXRD | Recommended Stock | Remarks |
|---|---|---|---|---|---|
| 42 | DC inverter rotary compressor | 1.0 | 8733956554 | ✓ | |
| 43 | Flare nut | 3.0 | 8733969147 | | |
| 44 | Flare nut | 3.0 | 8733969115 | | |
| 45 | Trademark | 2.0 | 8733969193 | | |
| 46 | Crankcase electric heater | 1.0 | 8733956456 | | |
| 47 | Heater | 1.0 | 8733956457 | | |
| 48 | Hose joint | 1.0 | 8733979606 | | |
| 49 | Compressor wires | 1.0 | 8733956399 | | |

## BMS500-AAM018-1CSXRD

# Bosch Climate 5000 Series - Gen 4 Multi Zone Outdoor Unit

## BMS500-AAM018-1CSXHD

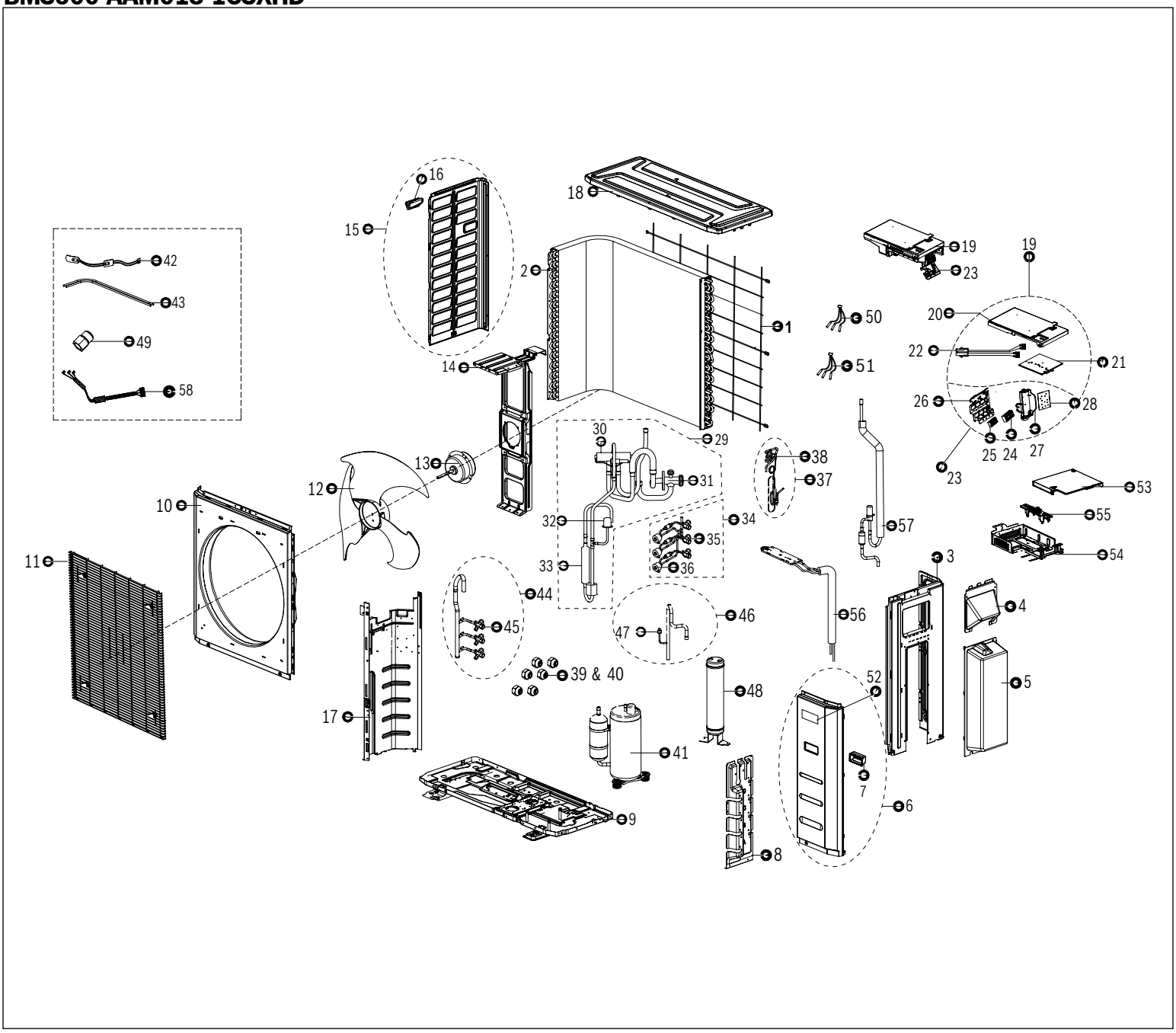




Bosch Thermotechnology Corp.
Tel: 1-800-283-3787
www.bosch-homecomfort.us

| Pos. | Description | Qty | BMS500-AAM018-1CSXHD | Recommended Stock | Remarks |
|---|---|---|---|---|---|
| 1 | Rear net | 1.0 | 8733969254 | | |
| 2 | Condenser assembly | 1.0 | 8733979607 | ✓ | |
| 3 | Guard cover | 1.0 | 8733979608 | | |
| 4 | Big handle | 1.0 | 8733953866 | | |
| 5 | Water collector | 1.0 | 8733945555 | | |
| 6 | Front right clapboard assembly | 1.0 | 8733976911 | | |
| 7 | Handle | 1.0 | 7738005674 | | |
| 8 | Valve plate | 1.0 | 8733979610 | | |
| 9 | Chassis | 1.0 | 8733945567 | | |
| 10 | Front panel | 1.0 | 8733956371 | | |
| 11 | Air outlet grille | 1.0 | 8733956372 | | |
| 12 | Axial flow fan | 1.0 | 8733969234 | ✓ | |
| 13 | Brushless dc motor | 1.0 | 8733979612 | ✓ | |
| 14 | Motor bracket | 1.0 | 8733956373 | | |
| 15 | Left side plate assembly | 1.0 | 8733969223 | | |
| 16 | Small handle | 1.0 | 8733969224 | | |
| 17 | Partition board | 1.0 | 8733979613 | | |
| 18 | Top cover | 1.0 | 8733969238 | | |
| 19 | Electronic control box subassembly | 1.0 | 8733979614 | ✓ | |
| 20 | Electronic installing box | 1.0 | 8733979615 | | |
| 21 | Main control board | 1.0 | 8733979616 | | |
| 22 | HV junction cable | 1.0 | 8733979551 | | |
| 23 | Terminal board subassembly | 1.0 | 8733979617 | ✓ | |
| 24 | Terminal | 3.0 | 8733979618 | ✓ | |
| 25 | Wire joint | 1.0 | 8733979619 | ✓ | |
| 26 | Terminal instalation | 1.0 | 8733979620 | | |
| 27 | DR installing foundation | 1.0 | 8733979621 | | |
| 28 | Key board | 1.0 | 8733979622 | | |
| 29 | 4-Way valve assembly | 1.0 | 8733979623 | ✓ | |
| 30 | Four-Way valve | 1.0 | 8733969247 | ✓ | |
| 31 | Gas valve | 1.0 | 8733979624 | | |
| 32 | Pressure controller | 1.0 | 8733976946 | ✓ | |
| 33 | Muffler | 1.0 | 8733979625 | | |
| 34 | Liquid valve assembly | 1.0 | 8733979626 | ✓ | |
| 35 | High pressure valve | 3.0 | 8733980952 | ✓ | |
| 36 | Electronic expansion valve | 3.0 | 8733979602 | ✓ | |
| 37 | Liquid valve assembly | 1.0 | 8733979627 | ✓ | |
| 38 | Liquid valve | 1.0 | 8733979628 | ✓ | |
| 39 | Flare nut | 3.0 | 8733969147 | | |
| 40 | Flare nut | 3.0 | 8733969115 | | |
| 41 | DC inverter rotary compressor | 1.0 | 8733969205 | ✓ | |

## BMS500-AAM018-1CSXHD

| Pos. | Description | Qty | BMS500-AAM018-1CSXHD | Recommended Stock | Remarks |
|---|---|---|---|---|---|
| 42 | Heater | 1.0 | 8733956380 | | |
| 43 | Crankcase electric heating strip | 1.0 | 8733956456 | | |
| 44 | Gas valve assembly | 1.0 | 8733979629 | ✓ | |
| 45 | Gas valve | 3.0 | 8733979548 | | |
| 46 | Suction pipe assembly | 1.0 | 8733979630 | | |
| 47 | Pressure controller | 1.0 | 8733979605 | ✓ | |
| 48 | Accumulator cylinder | 1.0 | 8733979631 | | |
| 49 | Hose joint | 1.0 | 8733979632 | | |
| 50 | Pipe temperature sensor | 1.0 | 8733979633 | ✓ | |
| 51 | Combination sensor | 1.0 | 8733979544 | ✓ | |
| 52 | Trademark | 1.0 | 8733969193 | | |
| 53 | Cover plate | 1.0 | 8733969257 | | |
| 54 | Electronic installing box | 1.0 | 8733979634 | ✓ | |
| 55 | U-typed support with copper pipe | 1.0 | 8733969244 | | |
| 56 | Radiator | 1.0 | 8733979635 | | |
| 57 | Electronic expansion valve | 1.0 | 8733979636 | | |
| 58 | Compressor wires | 1.0 | 8733956399 | ✓ | |

## BMS500-AAM018-1CSXHD

# Bosch Climate 5000 Series - Gen 4 Multi Zone Outdoor Unit

## BMS500-AAM027-1CSXRD | BMS500-AAM027-1CSXHD

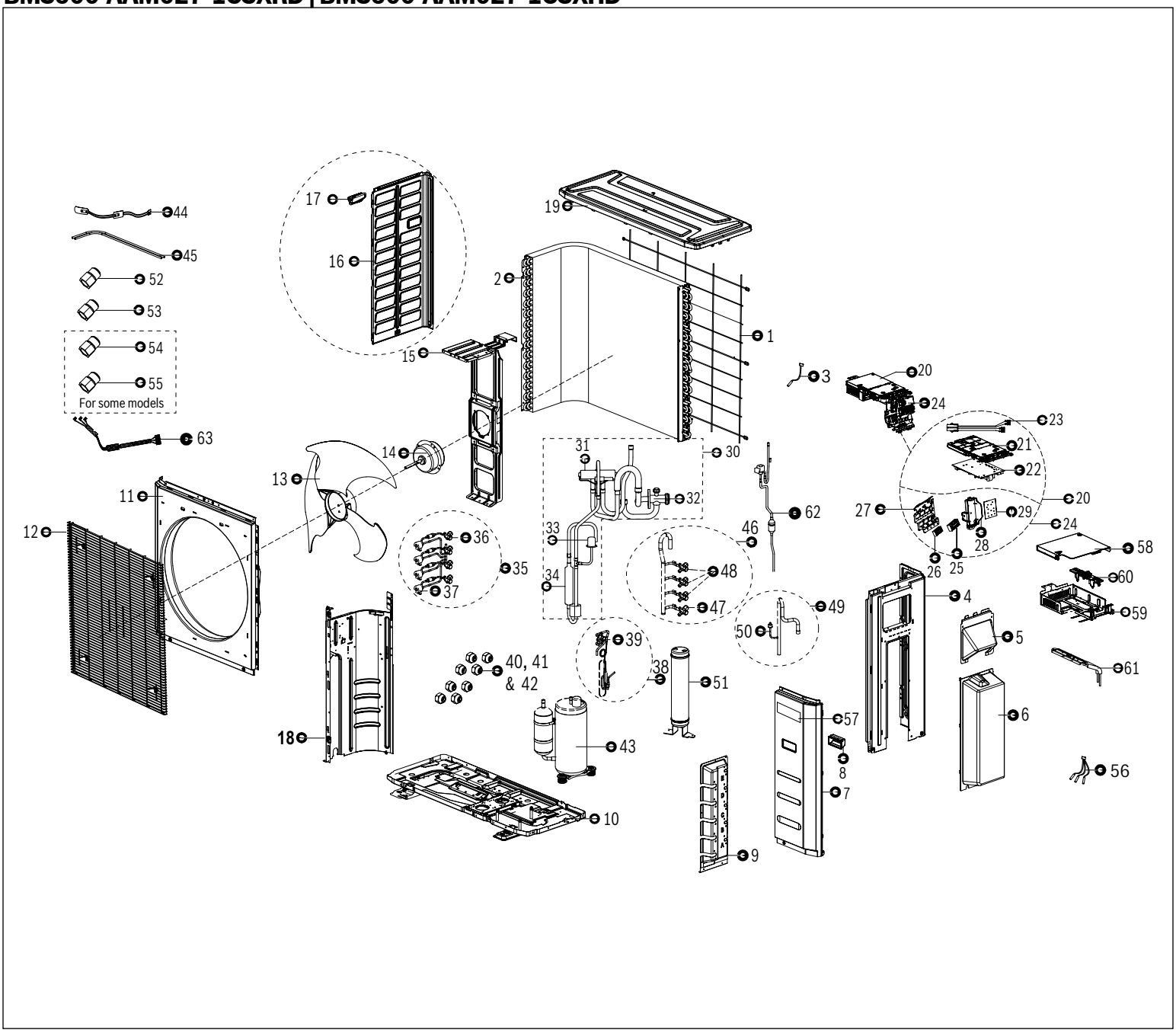




Bosch Thermotechnology Corp.
Tel: 1-800-283-3787
www.bosch-homecomfort.us

| Pos. | Description | Qty | BMS500-AAM027-1CSXHD | BMS500-AAM027-1CSXRD | Recommended Stock | Remarks |
|---|---|---|---|---|---|---|
| 1 | Rear net | 1.0 | 8733969254 | 8733969254 | | |
| 2 | Condenser | 1.0 | 8733979639 | 8733979607 | ✓ | |
| 3 | Pipe temperature sensor | 1.0 | 8733979637 | 8733979637 | ✓ | |
| 4 | Guard cover | 1.0 | 8733979608 | 8733979608 | | |
| 5 | Big handle | 1.0 | 8733953866 | 8733953866 | | |
| 6 | Water collector | 1.0 | 8733945555 | 8733945555 | | |
| 7 | Front right clapboard | 1.0 | 8733976911 | 8733976911 | | |
| 8 | Handle | 1.0 | 7738005674 | 7738005674 | | |
| 9 | Valve plate | 1.0 | 8733945558 | 8733945558 | | |
| 10 | Chassis | 1.0 | 8733945567 | 8733945567 | | |
| 11 | Front panel | 1.0 | 8733956371 | 8733956371 | | |
| 12 | Air outlet grille | 1.0 | 8733956372 | 8733956372 | | |
| 13 | Axial flow fan | 1.0 | 8733969234 | 8733969234 | ✓ | |
| 14 | Brushless DC motor | 1.0 | 8733979612 | 8733979612 | ✓ | |
| 15 | Supporter subassembly of fan motor | 1.0 | 8733979640 | 8733956373 | | |
| 16 | Left side plate subassembly | 1.0 | 8733969223 | 8733969223 | | |
| 17 | Small handle | 1.0 | 8733969224 | 8733969224 | | |
| 18 | Partition board | 1.0 | 8733979613 | 8733979613 | | |
| 19 | Top cover | 1.0 | 8733969238 | 8733969238 | | |
| 20 | Electronic control box subassembly | 1.0 | 8733979641 | 8733979642 | ✓ | |
| 21 | Electronic installing box | 1.0 | 8733979615 | 8733979615 | | |
| 22 | Main control board | 1.0 | 8733979643 | 8733979644 | ✓ | |
| 23 | HV junction cable | 1.0 | 8733979551 | 8733979551 | | |
| 24 | Terminal board subassembly | 1.0 | 8733979645 | 8733979645 | | |
| 25 | Wire joint | 4.0 | 8733979618 | 8733979618 | | |
| 26 | Wire joint | 1.0 | 8733979619 | 8733979619 | ✓ | |
| 27 | Terminal instalation | 1.0 | 8733979620 | 8733979620 | ✓ | |
| 28 | DR installing foundation | 1.0 | 8733979621 | 8733979621 | | |
| 29 | Key board | 1.0 | 8733979622 | 8733979622 | | |
| 30 | 4-Way valve assembly | 1.0 | 8733979646 | 8733979623 | ✓ | |
| 31 | Four-way valve | 1.0 | 8733969247 | 8733969247 | ✓ | |
| 32 | Gas valve | 1.0 | 8733979624 | 8733979624 | | |
| 33 | Pressure controller | 1.0 | 8733976946 | 8733976946 | ✓ | |
| 34 | Muffler | 1.0 | 8733979647 | 8733979625 | | |
| 35 | Liquid valve assembly | 1.0 | 8733979648 | 8733979648 | ✓ | |
| 36 | High pressure valve | 4.0 | 8733980952 | 8733980952 | | |
| 37 | Electronic expansion valve | 4.0 | 8733979602 | 8733979602 | ✓ | |
| 38 | Liquid valve assembly | 1.0 | 8733979627 | 8733979627 | ✓ | |
| 39 | Liquid valve | 1.0 | 8733979628 | 8733979628 | | |
| 40 | Flare nut | 4.0 | 8733969147 | 8733969147 | | |
| 41 | Flare nut | 1.0 | 8733969148 | 8733969148 | | |

## BMS500-AAM027-1CSXRD | BMS500-AAM027-1CSXHD

| Pos. | Description | Qty | BMS500-AAM027-1CSXHD | BMS500-AAM027-1CSXRD | Recommended Stock | Remarks |
|---|---|---|---|---|---|---|
| 42 | Flare nut | 3.0 | 8733969115 | 8733969115 | | |
| 43 | DC inverter rotary compressor | 1.0 | 8733956503 | 8733969205 | ✓ | |
| 44 | Heater | 1.0 | 8733956380 | 8733956380 | | |
| 45 | Crankcase electric heater | 1.0 | 8733956381 | 8733956456 | | |
| 46 | Gas valve assembly | 1.0 | 8733979649 | 8733979649 | ✓ | |
| 47 | Gas valve | 1.0 | 8733979650 | 8733979650 | | |
| 48 | Gas valve | 3.0 | 8733979548 | 8733979548 | | |
| 49 | Suction pipe assembly | 1.0 | 8733979651 | 8733979630 | | |
| 50 | Pressure controller | 1.0 | 8733979605 | 8733979605 | | |
| 51 | Accumulator cylinder | 1.0 | 8733979631 | 8733979631 | | |
| 52 | Hose joint | 3.0 | 8733979606 | 8733979606 | ✓ | |
| 53 | Hose joint | 1.0 | 8733979652 | N/A | | |
| 54 | Hose joint | 1.0 | 8733979632 | N/A | | |
| 55 | Pipe joint | 1.0 | 8733979653 | 8733979653 | | |
| 56 | Combination sensor | 1.0 | 8733979544 | 8733979544 | ✓ | |
| 57 | Trademark | 1.0 | 8733969193 | 8733969193 | | |
| 58 | Cover plate | 1.0 | 8733969257 | 8733969257 | | |
| 59 | Electronic installing box subassembly | 1.0 | 8733979634 | 8733979634 | ✓ | |
| 60 | U-typed support with copper pipe | 1.0 | 8733969244 | 8733969244 | | |
| 61 | Radiator | 1.0 | 8733979635 | 8733979635 | ✓ | |
| 62 | Electronic expansion valve | 1.0 | 8733979636 | 8733979636 | ✓ | |
| 63 | Compressor wires | 1.0 | 8733956399 | 8733956399 | | |

## BMS500-AAM027-1CSXRD | BMS500-AAM027-1CSXHD

# Bosch Climate 5000 Series - Gen 4 Multi Zone Outdoor Unit

## BMS500-AAM036-1CSXRD

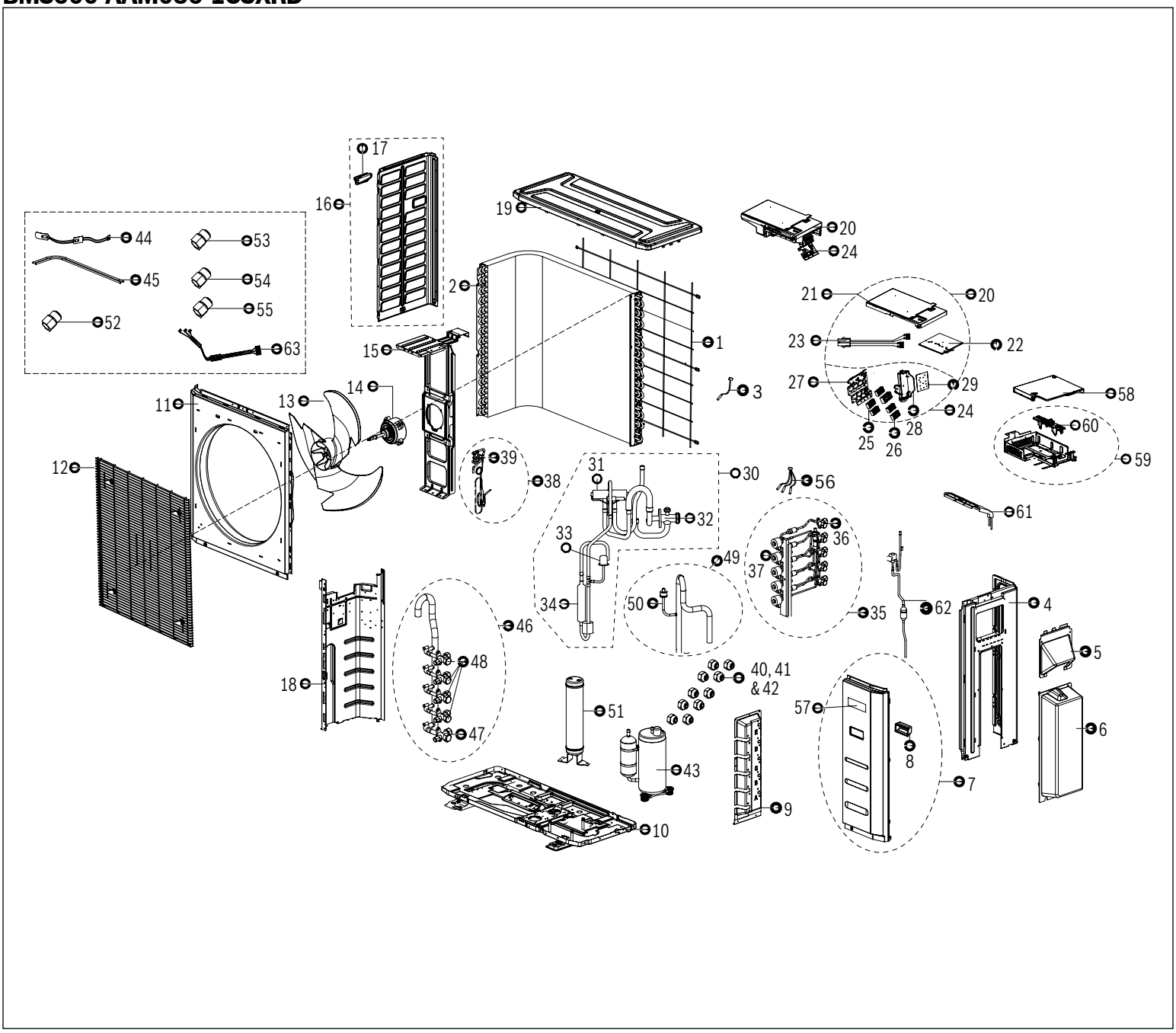




Bosch Thermotechnology Corp.
Tel: 1-800-283-3787
www.bosch-homecomfort.us

| Pos. | Description | Qty | BMS500-AAM036-1CSXRD | Recommended Stock | Remarks |
|---|---|---|---|---|---|
| 1 | Rear net | 1.0 | 8733969254 | | |
| 2 | Condenser | 1.0 | 8733979639 | ✓ | |
| 3 | Pipe temperature sensor | 1.0 | 8733979654 | ✓ | |
| 4 | Guard cover | 1.0 | 8733979608 | | |
| 5 | Big handle | 1.0 | 8733953866 | | |
| 6 | Water collector | 1.0 | 8733945555 | | |
| 7 | Front right clapboard assembly | 1.0 | 8733976911 | | |
| 8 | Handle | 1.0 | 7738005674 | | |
| 9 | Valve plate | 1.0 | 8733979655 | | |
| 10 | Chassis | 1.0 | 8733945567 | | |
| 11 | Front panel | 1.0 | 8733956371 | | |
| 12 | Air outlet grille | 1.0 | 8733956372 | | |
| 13 | Axial flow fan | 1.0 | 8733969234 | ✓ | |
| 14 | Brushless DC motor | 1.0 | 8733979612 | ✓ | |
| 15 | Fan motor support | 1.0 | 8733979640 | | |
| 16 | Left side plate assembly | 1.0 | 8733969223 | | |
| 17 | Small handle | 1.0 | 8733969224 | | |
| 18 | Partition board | 1.0 | 8733979613 | | |
| 19 | Top cover | 1.0 | 8733969238 | | |
| 20 | Electronic control box subassembly | 1.0 | 8733979656 | ✓ | |
| 21 | Electronic installing box | 1.0 | 8733979615 | | |
| 22 | Main control board | 1.0 | 8733979657 | ✓ | |
| 23 | HV junction cable | 1.0 | 8733979615 | | |
| 24 | Terminal board subassembly | 1.0 | 8733979551 | ✓ | |
| 25 | Wire joint | 5.0 | 8733979618 | ✓ | |
| 26 | Wire joint | 1.0 | 8733979619 | ✓ | |
| 27 | Termination installation | 1.0 | 8733979738 | | |
| 28 | DR installing foundation | 1.0 | 8733979621 | | |
| 29 | Key board | 1.0 | 8733979622 | ✓ | |
| 30 | 4-Way valve assembly | 1.0 | 8733979646 | ✓ | |
| 31 | Four-way valve | 1.0 | 8733969247 | ✓ | |
| 32 | Gas valve | 1.0 | 8733979624 | ✓ | |
| 33 | Pressure controller | 1.0 | 8733976946 | ✓ | |
| 34 | Muffler | 1.0 | 8733979647 | | |
| 35 | Liquid valve assembly | 1.0 | 8733979659 | ✓ | |
| 36 | High pressure valve | 5.0 | 8733980952 | | |
| 37 | Electronic expansion valve | 5.0 | 8733979602 | ✓ | |
| 38 | Liquid valve assembly | 1.0 | 8733979627 | ✓ | |
| 39 | Liquid valve | 1.0 | 8733979628 | | |
| 40 | Flare nut | 5.0 | 8733969147 | | |
| 41 | Flare nut | 1.0 | 8733969148 | | |

## BMS500-AAM036-1CSXRD

| Pos. | Description | Qty | BMS500-AAM036-1CSXRD | Recommended Stock | Remarks |
|---|---|---|---|---|---|
| 42 | Flare nut | 4.0 | 8733969115 | | |
| 43 | DC inverter rotary compressor | 1.0 | 8733956503 | ✓ | |
| 44 | Heater | 1.0 | 8733956380 | | |
| 45 | Crankcase electric heater | 1.0 | 8733956381 | | |
| 46 | Gas valve assembly | 1.0 | 8733980953 | ✓ | |
| 47 | Gas valve | 1.0 | 8733979650 | | |
| 48 | Gas valve | 4.0 | 8733979548 | | |
| 49 | Suction pipe assembly | 1.0 | 8733979651 | | |
| 50 | Pressure controller | 1.0 | 8733979605 | ✓ | |
| 51 | Accumulator cylinder | 1.0 | 8733979631 | | |
| 52 | Hose joint | 1.0 | 8733979652 | | |
| 53 | Hose joint | 1.0 | 8733979632 | | |
| 54 | Hose joint | 3.0 | 8733979606 | | |
| 55 | Pipe joint | 1.0 | 8733979653 | | |
| 56 | Combination sensor | 1.0 | 8733979544 | ✓ | |
| 57 | Trademark | 1.0 | 8733969193 | | |
| 58 | Cover plate | 1.0 | 8733969257 | | |
| 59 | Electronic installing box subassembly | 1.0 | 8733979634 | | |
| 60 | U-typed support with copper pipe | 1.0 | 8733969244 | | |
| 61 | Radiator | 1.0 | 8733979635 | | |
| 62 | Electronic expansion valve | 1.0 | 8733979636 | | |
| 63 | Compressor wires | 1.0 | 8733956399 | | |

**BMS500-AAM036-1CSXRD**

# Bosch Climate 5000 Series - Gen 4 Multi Zone Outdoor Unit

## BMS500-AAM036-1CSXHD

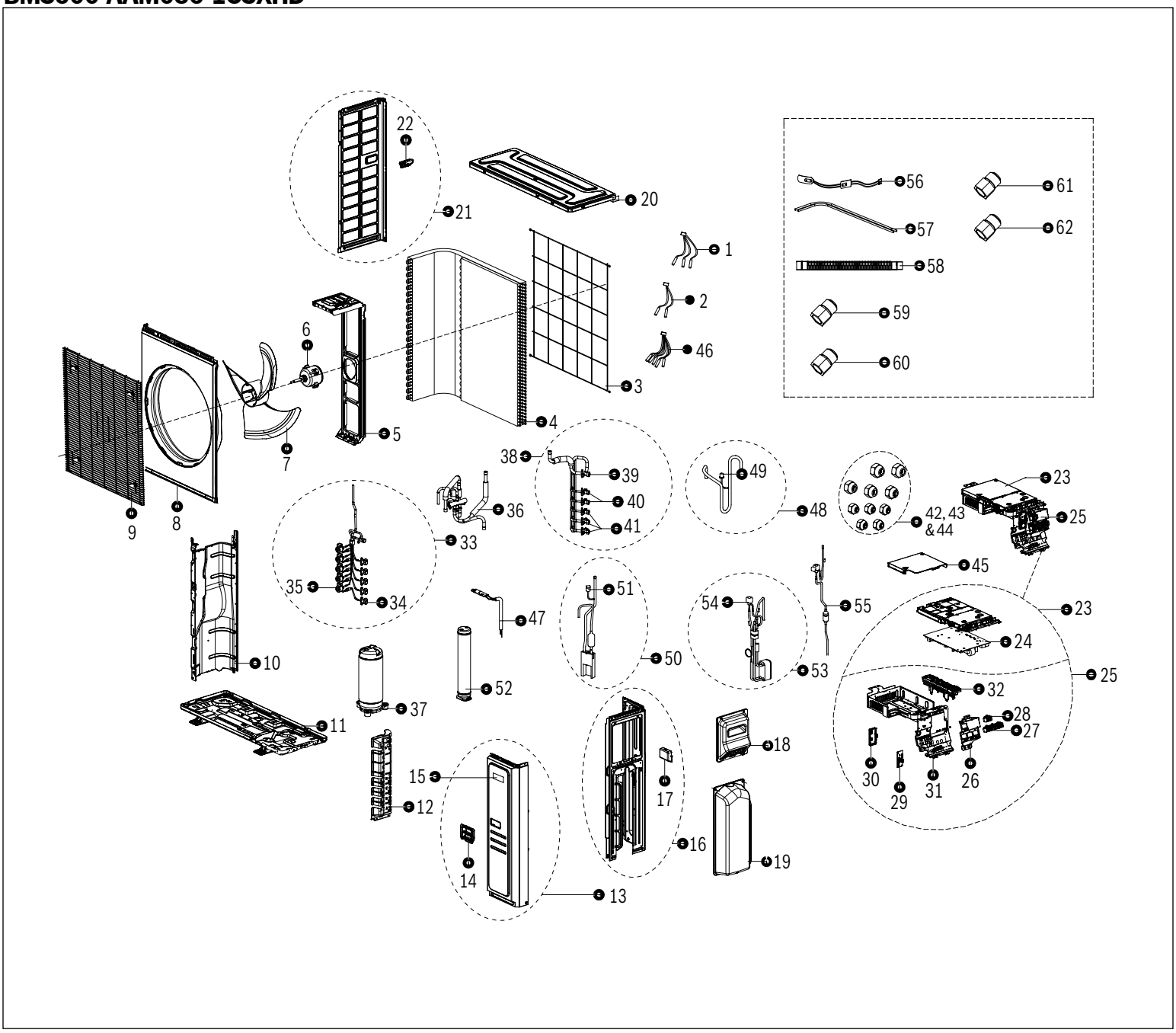


BOSCH



Bosch Thermotechnology Corp.
Tel: 1-800-283-3787
www.bosch-homecomfort.us

| Pos. | Description | Qty | BMS500-AAM036-1CSXHD | Recommended Stock | Remarks |
|---|---|---|---|---|---|
| 1 | Combination sensor | 1.0 | 8733979544 | | |
| 2 | Pipe temperature sensor | 1.0 | 8733979660 | ✓ | |
| 3 | Rear net | 1.0 | 8733979661 | | |
| 4 | Condenser | 1.0 | 8733979662 | ✓ | |
| 5 | Supporter subassembly of fan motor | 1.0 | 8733979663 | | |
| 6 | Brushless DC motor | 1.0 | 8733979664 | ✓ | |
| 7 | Axial flow fan | 1.0 | 8733979665 | ✓ | |
| 8 | Front panel | 1.0 | 8733979666 | | |
| 9 | Air outlet grille | 1.0 | 8733979667 | | |
| 10 | Partition board | 1.0 | 8733979668 | ✓ | |
| 11 | Chassis | 1.0 | 8733979669 | | |
| 12 | Valve plate | 1.0 | 8733979670 | | |
| 13 | Front right clapboard assembly | 1.0 | 8733979671 | | |
| 14 | Small handle | 1.0 | 8733979672 | | |
| 15 | Trademark | 2.0 | 8733969193 | | |
| 16 | Rear right clapboard assembly | 1.0 | 8733979673 | | |
| 17 | Small handle | 1.0 | 8733979672 | | |
| 18 | Big handle | 2.0 | 8733979674 | | |
| 19 | Water collector | 2.0 | 8733979675 | | |
| 20 | Top cover | 1.0 | 8733979676 | | |
| 21 | Left side plate assembly | 4.0 | 8733979677 | | |
| 22 | Small handle | 2.0 | 8733969224 | | |
| 23 | Electronic control box subassembly | 2.0 | 8733979678 | | |
| 24 | Main control board | 1.0 | 8733979679 | ✓ | |
| 25 | Terminal board subassembly | 1.0 | 8733979680 | | |
| 26 | Terminal board | 1.0 | 8733979681 | ✓ | |
| 27 | Wire joint | 1.0 | 8733976937 | | |
| 28 | Wire joint | 5.0 | 8733979618 | ✓ | |
| 29 | Key board | 1.0 | 8733979600 | ✓ | |
| 30 | Electronic installing box | 1.0 | 8733979682 | ✓ | |
| 31 | Electronic installing box | 1.0 | 8733979683 | | |
| 32 | U-typed support with copper pipe | 1.0 | 8733969244 | | |
| 33 | Liquid valve assembly | 1.0 | 8733979684 | ✓ | |
| 34 | High pressure valve | 5.0 | 8733980952 | | |
| 35 | Electronic expansion valve | 5.0 | 8733979685 | ✓ | |
| 36 | 4-Way valve | 1.0 | 8733979686 | ✓ | |
| 37 | DC inverter rotary compressor | 1.0 | 8733979687 | ✓ | |
| 38 | Gas valve assembly | 1.0 | 8733979688 | ✓ | |
| 39 | Gas valve | 2.0 | 8733979689 | | |
| 40 | Gas valve | 4.0 | 8733979650 | | |
| 41 | Gas valve | 6.0 | 8733979548 | | |

## BMS500-AAM036-1CSXHD

| Pos. | Description | Qty | BMS500-AAM036-1CSXHD | Recommended Stock | Remarks |
|---|---|---|---|---|---|
| 42 | Flare nut | 5.0 | 8733969147 | | |
| 43 | Flare nut | 2.0 | 8733969148 | | |
| 44 | Flare nut | 3.0 | 8733969115 | | |
| 45 | Cover plate | 1.0 | 8733969257 | | |
| 46 | Pipe temperature sensor | 1.0 | 8733979654 | ✓ | |
| 47 | Radiator | 1.0 | 8733979690 | | |
| 48 | Suction pipe assembly | 1.0 | 8733979691 | | |
| 49 | Pressure controller | 1.0 | 8733979605 | ✓ | |
| 50 | Discharge pipe assembly | 1.0 | 8733979692 | | |
| 51 | Pressure switch | 1.0 | 8733956505 | | |
| 52 | Gas-liquid separator | 1.0 | 8733979693 | ✓ | |
| 53 | Plate heat exchanger subassembly | 1.0 | 8733979694 | | |
| 54 | Electronic expansion valve | 1.0 | 8733979695 | ✓ | |
| 55 | Electronic expansion valve | 1.0 | 8733979696 | ✓ | |
| 56 | Crankcase electric heating strip | 1.0 | 8733976928 | | |
| 57 | Heater | 1.0 | 8733956380 | | |
| 58 | Drain connection | 1.0 | 8733979697 | | |
| 59 | Hose joint assembly | 2.0 | 8733979652 | | |
| 60 | Hose joint assembly | 2.0 | 8733979632 | | |
| 61 | Hose joint assembly | 1.0 | 8733979606 | | |
| 62 | Pipe joint subassembly | 2.0 | 8733979653 | | |

## BMS500-AAM036-1CSXHD

# Bosch Climate 5000 Series - Gen 4 Multi Zone Outdoor Unit

## BMS500-AAM048-1CSXRD

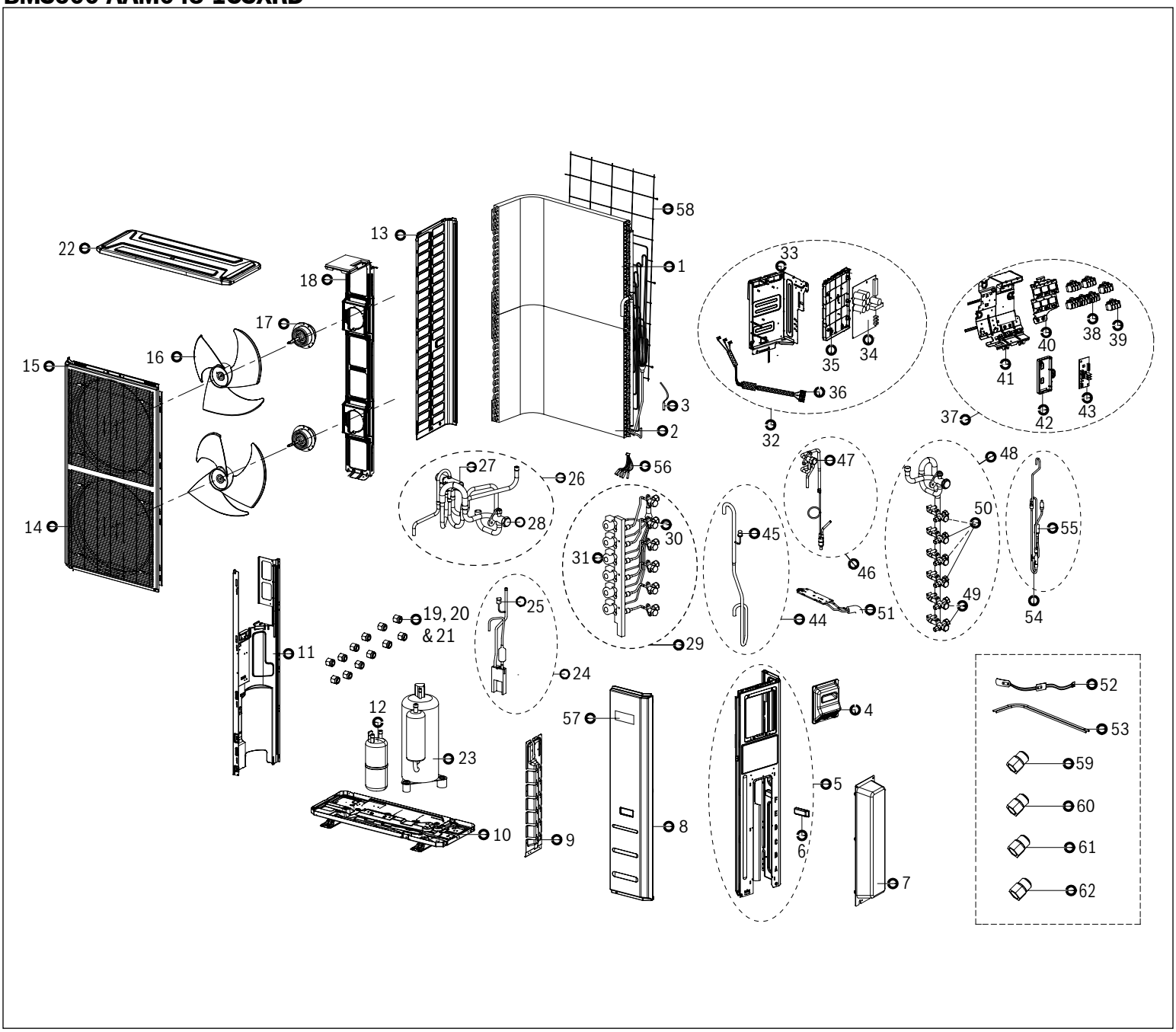




Bosch Thermotechnology Corp.
Tel: 1-800-283-3787
www.bosch-homecomfort.us

| Pos. | Description | Qty | BMS500-AAM048-1CSXRD | Recommended Stock | Remarks |
|---|---|---|---|---|---|
| 1 | Condenser top section | 1.0 | 8733976965 | ✓ | |
| 2 | Condenser bottom section | 1.0 | 8733979698 | ✓ | |
| 3 | Pipe temperature sensor | 1.0 | 8733979699 | ✓ | |
| 4 | Big handle assembly | 1.0 | 8733979674 | | |
| 5 | Rear right clapboard assembly | 1.0 | 8733979700 | | |
| 6 | Handle | 1.0 | 7738005674 | | |
| 7 | Water collector | 1.0 | 8733945548 | | |
| 8 | Front right clapboard assembly | 1.0 | 8733945562 | | |
| 9 | Valve plate | 1.0 | 8733979703 | | |
| 10 | Chassis assembly | 1.0 | 8733945565 | | |
| 11 | Partition board assembly | 1.0 | 8733945559 | | |
| 12 | Liquid-storage tank | 1.0 | 8733976972 | | |
| 13 | Left side plate assembly of cabinet | 1.0 | 8733945574 | | |
| 14 | Air outlet grille | 2.0 | 8733956372 | | |
| 15 | Front panel | 1.0 | 8733945569 | | |
| 16 | Axial fan | 2.0 | 8733976975 | ✓ | |
| 17 | Brushless DC motor | 2.0 | 8733976976 | ✓ | |
| 18 | Supporter subassembly of fan motor | 1.0 | 8733945563 | | |
| 19 | Flare nut | 6.0 | 8733969147 | | |
| 20 | Flare nut | 2.0 | 8733969148 | | |
| 21 | Flare nut | 4.0 | 8733969115 | | |
| 22 | Top cover assembly | 1.0 | 8733979704 | | |
| 23 | DC inverter rotary compressor | 1.0 | 8733956513 | ✓ | |
| 24 | Discharge pipe assembly | 1.0 | 8733979705 | | |
| 25 | Muffler | 1.0 | 8733956567 | | |
| 26 | 4-Way valve assembly | 1.0 | 8733979706 | ✓ | |
| 27 | Four-way valve | 1.0 | 8733979707 | ✓ | |
| 28 | Gas valve | 1.0 | 8733979624 | | |
| 29 | Liquid valve assembly | 1.0 | 8733979708 | ✓ | |
| 30 | High pressure valve | 6.0 | 8733980952 | ✓ | |
| 31 | Electronic expansion valve | 6.0 | 8733979709 | | |
| 32 | Electronic control box subassembly | 1.0 | 8733979710 | ✓ | |
| 33 | Installation plate of electric parts subassembly | 1.0 | 8733976984 | | |
| 34 | Outdoor main control board subassembly | 1.0 | 8733979711 | ✓ | |
| 35 | Electronic installing box | 1.0 | 8733976988 | | |
| 36 | Compressor wire subassembly | 1.0 | 8733956591 | | |
| 37 | Terminal board subassembly | 1.0 | 8733979712 | ✓ | |
| 38 | Wire joint | 1.0 | 8733976937 | | |
| 39 | Wire joint | 6.0 | 8733979618 | ✓ | |
| 40 | Terminal board | 1.0 | 8733979681 | | |
| 41 | Terminal instalation subassembly | 1.0 | 8733979713 | | |

## BMS500-AAM048-1CSXRD

| Pos. | Description | Qty | BMS500-AAM048-1CSXRD | Recommended Stock | Remarks |
|---|---|---|---|---|---|
| 42 | Electronic installing box | 1.0 | 8733979682 | ✓ | |
| 43 | Key board subassembly | 1.0 | 8733979600 | | |
| 44 | Suction pipe assembly | 1.0 | 8733979714 | | |
| 45 | Pressure controller | 1.0 | 8733979605 | ✓ | |
| 46 | Liquid valve assembly | 1.0 | 8733979715 | | |
| 47 | Liquid valve | 1.0 | 8733979628 | | |
| 48 | Gas valve assembly | 1.0 | 8733979716 | ✓ | |
| 49 | Gas valve | 2.0 | 8733979650 | | |
| 50 | Gas valve | 4.0 | 8733979548 | | |
| 51 | Radiator subassembly | 1.0 | 8733979717 | | |
| 52 | Crankcase electric heating strip | 1.0 | 8733956526 | | |
| 53 | Heater | 1.0 | 8733956380 | | |
| 54 | Electronic expansion valve subassembly | 1.0 | 8733979718 | ✓ | |
| 55 | Electronic expansion valve body | 1.0 | 8733956578 | ✓ | |
| 56 | Combination sensor | 1.0 | 8733976995 | ✓ | |
| 57 | Trademark | 1.0 | 8733969193 | | |
| 58 | Rear net | 1.0 | 8733945570 | | |
| 59 | Hose joint assembly | 2.0 | 8733979652 | | |
| 60 | Hose joint assembly | 2.0 | 8733979632 | | |
| 61 | Hose joint assembly | 1.0 | 8733979606 | | |
| 62 | Pipe joint subassembly | 2.0 | 8733979653 | | |

## BMS500-AAM048-1CSXRD

# Bosch Climate 5000 Series - Gen 4 Multi Zone Outdoor Unit

## BMS500-AAM048-1CSXHD

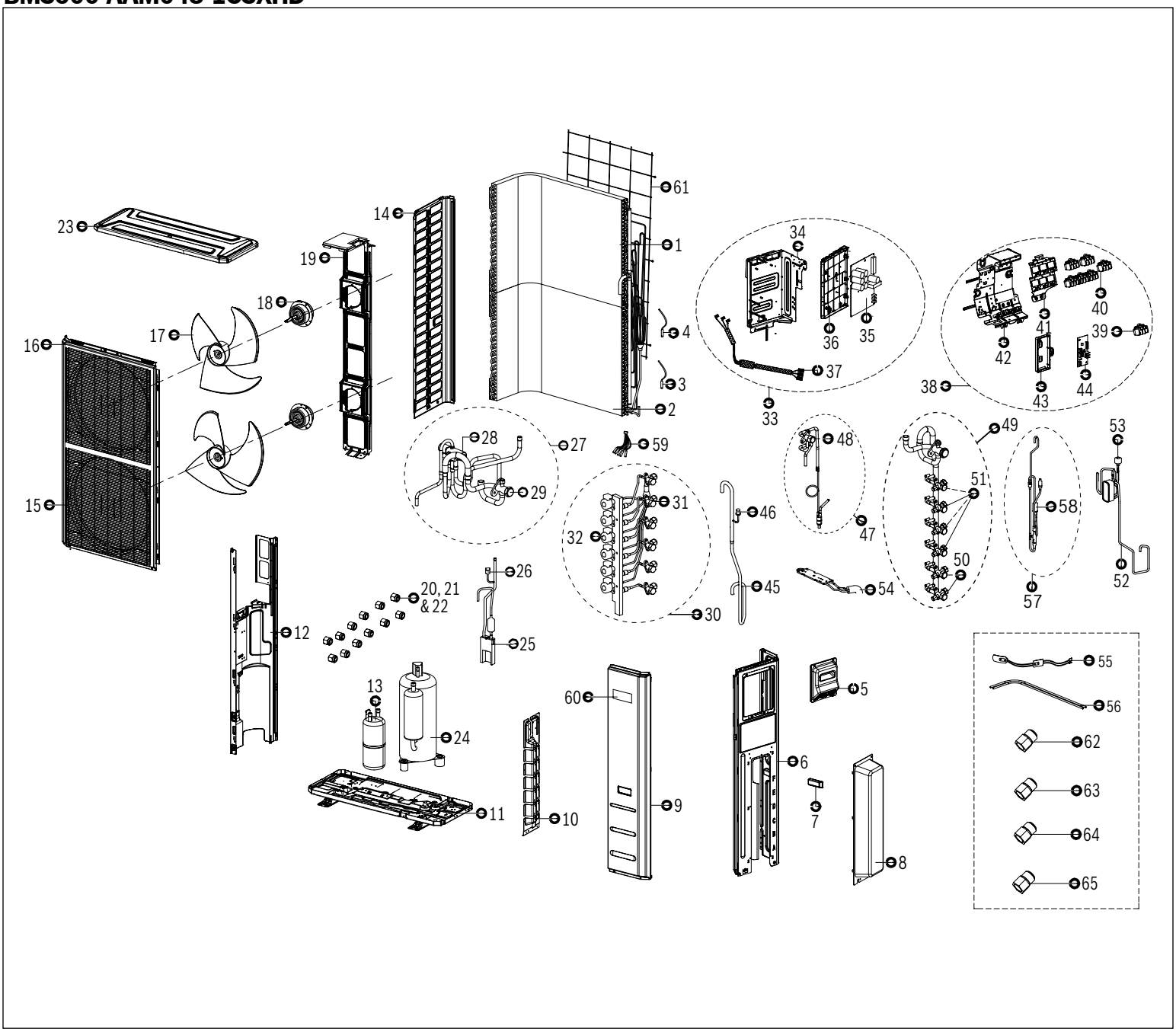




Bosch Thermotechnology Corp.
Tel: 1-800-283-3787
www.bosch-homecomfort.us

| Pos. | Description | Qty | BMS500-AAM048-1CSXHD | Recommended Stock | Remarks |
|---|---|---|---|---|---|
| 1 | Condenser top section | 1.0 | 8733979719 | ✓ | |
| 2 | Condenser bottom section | 1.0 | 8733979720 | ✓ | |
| 3 | Pipe temperature sensor | 1.0 | 8733979660 | ✓ | |
| 4 | Pipe temperature sensor | 1.0 | 8733979699 | ✓ | |
| 5 | Big handle assembly | 1.0 | 8733979674 | | |
| 6 | Rear right clapboard | 1.0 | 8733979700 | | |
| 7 | Handle | 1.0 | 7738005674 | | |
| 8 | Water collector | 1.0 | 8733945548 | | |
| 9 | Front right clapboard | 1.0 | 8733945562 | | |
| 10 | Valve plate | 1.0 | 8733979703 | | |
| 11 | Chassis assembly | 1.0 | 8733979721 | | |
| 12 | Partition board assembly | 1.0 | 8733979722 | | |
| 13 | Liquid-storage tank | 1.0 | 8733979723 | | |
| 14 | Left side plate | 1.0 | 8733945574 | | |
| 15 | Air outlet grille | 2.0 | 8733956372 | | |
| 16 | Front panel | 1.0 | 8733945569 | | |
| 17 | Axial fan | 2.0 | 8733976975 | ✓ | |
| 18 | Brushless DC motor | 2.0 | 8733976976 | ✓ | |
| 19 | Fan motor support | 1.0 | 8733979724 | | |
| 20 | Flare nut | 6.0 | 8733969147 | | |
| 21 | Flare nut | 2.0 | 8733969148 | | |
| 22 | Flare nut | 4.0 | 8733969115 | | |
| 23 | Top cover | 1.0 | 8733979704 | | |
| 24 | DC inverter rotary compressor | 1.0 | 8733979725 | ✓ | |
| 25 | Discharge pipe | 1.0 | 8733979726 | | |
| 26 | Pressure controller | 1.0 | 8733976946 | ✓ | |
| 27 | 4-Way valve assembly | 1.0 | 8733979727 | ✓ | |
| 28 | Four-way valve | 1.0 | 8733979707 | ✓ | |
| 29 | Gas valve | 1.0 | 8733979624 | | |
| 30 | Liquid valve assembly | 1.0 | 8733979708 | ✓ | |
| 31 | High pressure valve | 6.0 | 8733980952 | | |
| 32 | Electronic expansion valve | 6.0 | 8733979709 | ✓ | |
| 33 | Electronic control box subassembly | 1.0 | 8733979728 | ✓ | |
| 34 | Installation plate of electric parts | 1.0 | 8733979729 | | |
| 35 | Outdoor main control board | 1.0 | 8733979730 | ✓ | |
| 36 | Electronic installing box | 1.0 | 8733976988 | | |
| 37 | Compressor wire | 1.0 | 8733979731 | | |
| 38 | Terminal board subassembly | 1.0 | 8733979712 | ✓ | |
| 39 | Wire joint | 1.0 | 8733976937 | | |
| 40 | Wire joint | 6.0 | 8733979618 | ✓ | |
| 41 | Terminal board | 1.0 | 8733979681 | | |

## BMS500-AAM048-1CSXHD

| Pos. | Description | Qty | BMS500-AAM048-1CSXHD | Recommended Stock | Remarks |
|---|---|---|---|---|---|
| 42 | Terminal instalation | 1.0 | 8733979713 | | |
| 43 | Electronic installing box | 1.0 | 8733979682 | | |
| 44 | Key board | 1.0 | 8733979600 | ✓ | |
| 45 | Suction pipe | 1.0 | 8733979732 | | |
| 46 | Pressure controller | 1.0 | 8733979605 | ✓ | |
| 47 | Liquid valve assembly | 1.0 | 8733979715 | | |
| 48 | Liquid valve | 1.0 | 8733979628 | | |
| 49 | Gas valve assembly | 1.0 | 8733979716 | ✓ | |
| 50 | Gas valve | 2.0 | 8733979650 | | |
| 51 | Gas valve | 4.0 | 8733979548 | | |
| 52 | Plate heat exchanger | 1.0 | 8733979733 | ✓ | |
| 53 | Electronic expansion valve | 1.0 | 8733979734 | ✓ | |
| 54 | Radiator | 1.0 | 8733979735 | | |
| 55 | Crankcase electric heating strip | 1.0 | 8733956526 | | |
| 56 | Heater | 1.0 | 8733956380 | | |
| 57 | Electronic expansion valve subassembly | 1.0 | 8733979736 | ✓ | |
| 58 | Electronic expansion valve body | 1.0 | 8733979737 | | |
| 59 | Combination sensor | 1.0 | 8733976995 | ✓ | |
| 60 | Trademark | 1.0 | 8733969193 | | |
| 61 | Rear net | 1.0 | 8733945570 | | |
| 62 | Hose joint | 2.0 | 8733979652 | | |
| 63 | Hose joint | 2.0 | 8733979632 | | |
| 64 | Hose joint | 1.0 | 8733979606 | | |
| 65 | Pipe joint | 2.0 | 8733979653 | | |

## BMS500-AAM048-1CSXHD

### Parts Pricing & Availability

For current spare parts pricing & availability information, please visit arc.bosch-homecomfort.us or scan the code below.

SCAN ME