128g铜A4双面500



Patio Lounge Chair

Thank you very much
for purchasing our Patio Lounge Chair

INSTRUCTION MANUAL



128g铜A4双面500

CAUTION

Before use

- Exercise caution when assembling the products, as some parts may have sharp edges.
- Before fully assembling the product, keep all components and accessories away from children and pets.
- Assemble the item on a soft non-abrasive surface such as carpeting to avoid damage.
- Keep screws slightly loose during assembly. Fully tighten only after all parts are aligned.

During use

- For your safety, avoid using this item as a stepladder.
- Before use, ensure all bolts, screws, and knobs are securely fastened, checking every 90 days.
- Do not use or store near open flammable or combustible chemicals.
- If any parts are missing, broken, damaged, or worn, refrain from using the product until repairs are made or factory replacement parts are installed.

After use

- Before assembling the product, carefully compare each part with the parts list. If you discover any missing or damaged parts, do not proceed with assembly; instead, contact us immediately for assistance.
- We value every customer's user experience, so please feel free to reach out with any suggestions or feedback, and we will promptly provide an efficient solution.

Warranty Coverage Requirements

- If your appliance fails within 1 year of purchase due to non-human damage, our team will replace it free of charge. For the quickest resolution, please send us photos of the damaged parts along with the make and model number of your product.

PARTS

❶ 1 PC 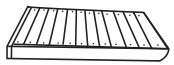	❷ 1 PC 	❸ 1 PC 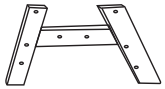	❹ 1 PC 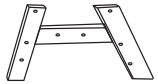
❺ 1 PC 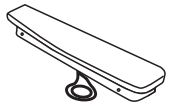	❻ 1 PC 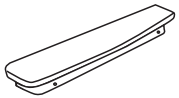	❼ 1 PC 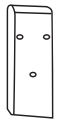	❽ 1 PC 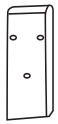
❾ 4 PCS 	❿ 1 PC 	⓫ 1 PC 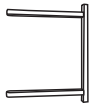	⓬ 2 PCS 

HARDWARE

Ⓐ 10PCS (M6x60) 	Ⓑ 4 PCS (M6x55) 	Ⓒ 2 PCS 	Ⓓ 1 PC (M6x25) 		
Ⓔ 16 PCS (M6) 	Ⓕ 16 PCS (M6) 	Ⓖ 1 PC 	Ⓗ 2 PCS (M6x70) 	Ⓘ 2 PCS (M6x55) 	Ⓙ 2 PCS (M6x50) 

INSTRUCTIONS

Step 5

Ⓗ 2PCS (M6x70)	
Ⓓ 1 PC (M6x25)	
Ⓔ 2 PCS (M6)	
Ⓕ 2 PCS (M6)	

INSTRUCTIONS

Step 4

J 2 PCS (M6x50)	
I 8 PCS (M6x55)	
C 2 PCS	
E 2 PCS (M6)	
F 2 PCS (M6)	

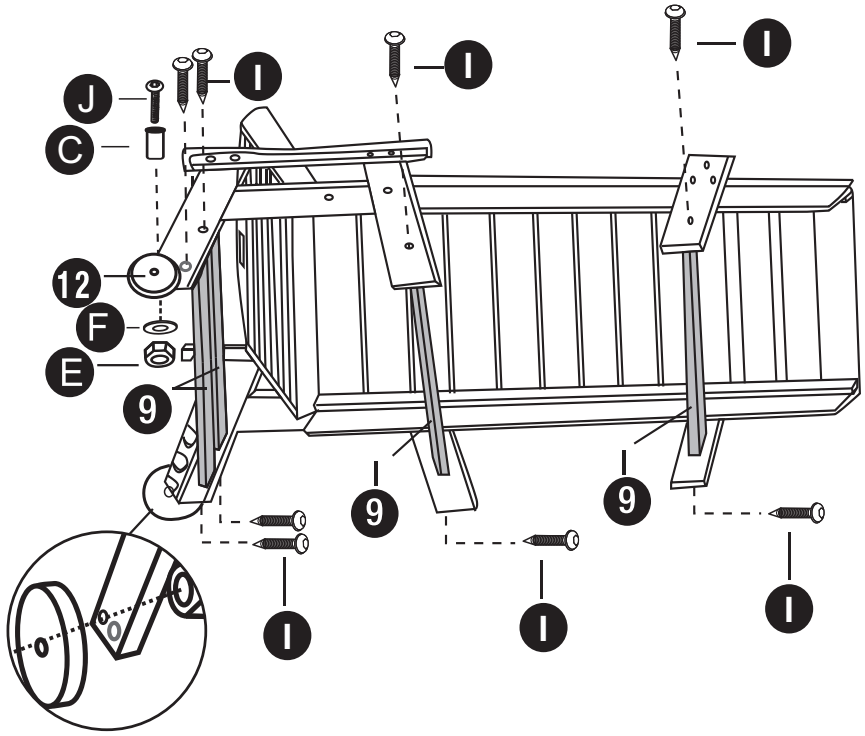

INSTRUCTIONS

Step 1

Please note that all assembled screws should not be locked at the beginning, and then locked one by one after assembly to avoid any deviation in the screw hole position. Thank you

B 4PCS (M6x55)	
E 4 PCS (M6)	
F 4 PCS (M6)	

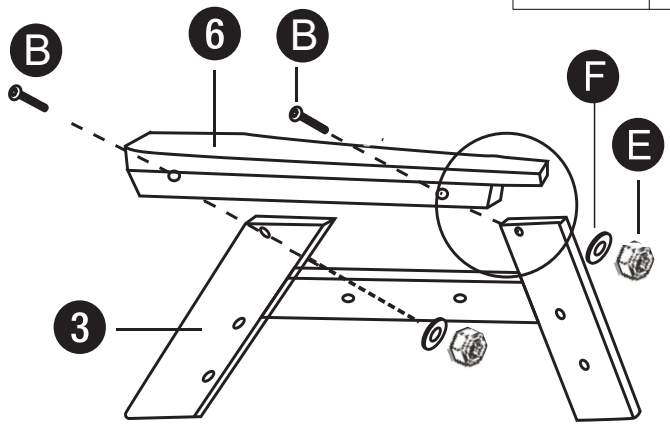

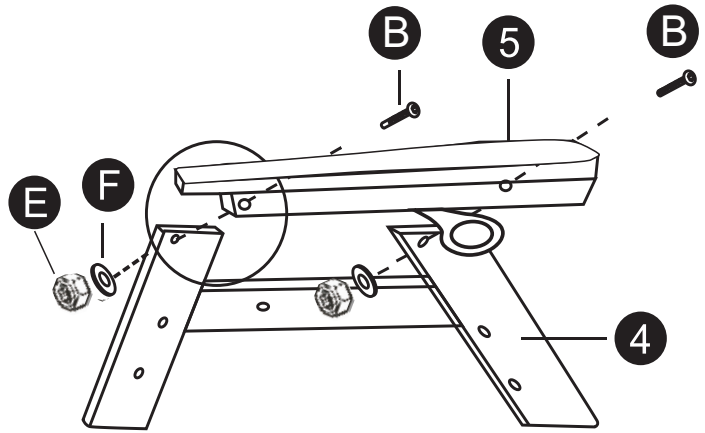

INSTRUCTIONS

Step 2

A 5 PCS (M6×60)	
E 5 PCS (M6)	
F 5 PCS (M6)	

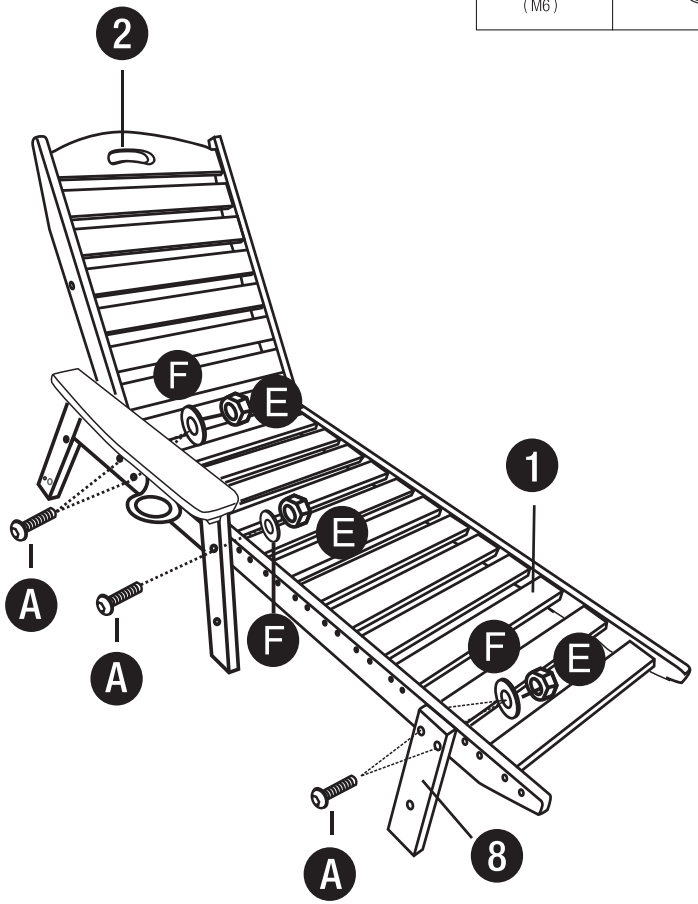

INSTRUCTIONS

Step 3

A 5 PCS (M6×60)	
E 5 PCS (M6)	
F 5 PCS (M6)	

