ITEM #6838216
MODEL #CEN52BNK4L

CENTURION LED CEILING FAN

Español p. 22

ATTACH YOUR RECEIPT HERE

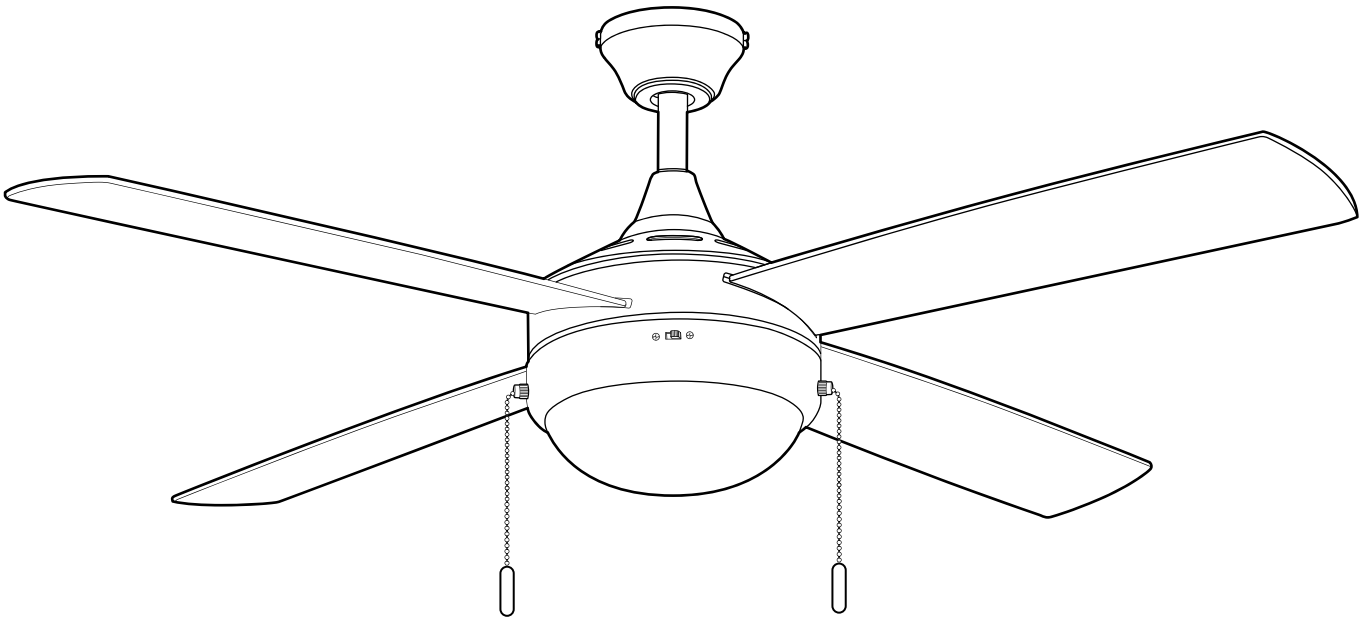

Intertek
4007498

Purchase Date _____

Questions, problems, missing parts?
Before returning, contact us on:
800-527-1292, 8:30 a.m. - 5 p.m., CST, Monday - Friday.

TABLE OF CONTENTS

Safety Information 2

Package Contents 5

Hardware Contents 6

Preparation 6

Initial Installation 6

Downrod-Style Fan Mounting 9

Closemount-Style Fan Mounting 10

Wiring 12

Final Installation 15

Operating Instructions 16

Blade Replacement 18

Care and Maintenance 20

Troubleshooting 20

Limited Lifetime Warranty 21

Replacement Parts List 21

SAFETY INFORMATION

CAUTION: Changes or modifications not approved by the party responsible for compliance could void the user's authority to operate the equipment.

***NOTE**: This equipment has been tested and found to comply with the limits for a Class B digital device, pursuant to Part 15 of the FCC Rules. These limits are designed to provide reasonable protection against harmful interference in a residential installation. This equipment generates, uses and can radiate radio frequency energy and, if not installed and used in accordance with the instructions, may cause harmful interference to radio communications. However, there is no guarantee that interference will not occur in a particular installation. If this equipment does cause harmful interference to radio or television reception, which can be determined by turning the equipment off and on, the user is encouraged to try to correct the interference by one or more of the following measures:

* Reorient or relocate the receiving antenna.
* Increase the separation between the equipment and receiver.
* Connect the equipment into an outlet on a circuit different from that to which the receiver is connected.

Consult the dealer or an experienced radio/TV technician for help.

The device complies with Part 15 of the FCC Rules. Operation is subject to the following two conditions: (1) this device may not cause harmful interference, (2) this device must accept any interference received, including interference that may cause undesired operation.

Distributed by: Litex Industries Inc., P.O. Box 535639, Grand Prairie, TX, 75050; 800-527-1292

NOTE: Dimmable to 10%.

SAFETY INFORMATION

READ AND SAVE THESE INSTRUCTIONS

Please read and understand this entire manual before attempting to assemble, install or operate the product. Review the accompanying assembly diagrams.

- Do not discard fan carton or foam inserts. Should this fan need to be returned to the factory for repairs, it must be shipped in its original packaging to ensure proper protection against damage that might exceed the initial cause for return.
- Make sure all electrical connections comply with local codes, ordinances, the National Electrical Code and ANSI/NFPA 70-1999. Hire a qualified electrician or consult a do-it-yourself wiring handbook if you are unfamiliar with installing electrical wiring.
- Make sure the installation site you choose allows a minimum clearance of 7 ft. from the blades to the floor and at least 30 in. from the end of the blades to any obstruction.
- After you install the fan, make sure all connections are secure to prevent the fan from falling.
- The net weight of this fan including the light kit is: 18.7 lbs.

⚠ DANGER

When using an existing outlet box, make sure the outlet box is securely attached to the building structure and can support the full weight of the fan. Failure to do this can result in serious injury or death. The stability of the outlet box is essential in minimizing wobble and noise in the fan after installation is complete.

To reduce the risk of serious bodily injury, DO NOT use power tools to assemble any part of the fan.

Before proceeding, be sure to shut off electricity at main switch or circuit breaker in order to avoid electrical shock.

⚠ WARNING

To reduce the risk of fire, electrical shock or personal injury, mount fan to outlet box marked "ACCEPTABLE FOR FAN SUPPORT OF 35 LBS. OR LESS" and use mounting screws provided with the outlet box. Most outlet boxes commonly used for the support of lighting fixtures are not acceptable for fan support and may need to be replaced. Consult a qualified electrician if in doubt.

When mounting fan to a ceiling outlet box, use a METAL octagonal outlet box; do NOT use a plastic outlet box. Secure the outlet box directly to the building structure. The outlet box and its support must be able to support the moving weight of the fan (at least 35 lbs.).

To reduce the risk of fire, electrical shock or personal injury, lever wire connectors provided with this fan are designed to accept only one 12-gauge house wire and one lead wire from the fan. If your house wire is larger than 12-gauge or there is more than one house wire to connect to the corresponding fan lead wires, consult an electrician for the proper size lever wire connectors to use.

SAFETY INFORMATION

⚠ WARNING

To avoid personal injury, the use of gloves may be necessary while handling fan parts with sharp edges.

To reduce the risk of fire or electrical shock, do not use the fan with any solid state speed control device or control fan speed with a full range dimmer switch.

To reduce the risk of fire, electrical shock or personal injury, do not bend the blades when installing them or when cleaning the fan. Do not insert objects between the rotating fan blades.

To reduce the risk of personal injury, use *only* parts provided with this fan. The use of parts *OTHER* than those provided with this fan will void the warranty.

⚠ CAUTION

Be sure outlet box is properly grounded and that a ground wire (GREEN or BARE) is present.

Once installation is complete, carefully check all screws, bolts and nuts on fan motor assembly to ensure that they are secured.

Do NOT tamper with or attempt to repair LED component. The light source is designed for this specific application and should not be serviced by untrained personnel. If any servicing is required, call our customer service department.

PACKAGE CONTENTS

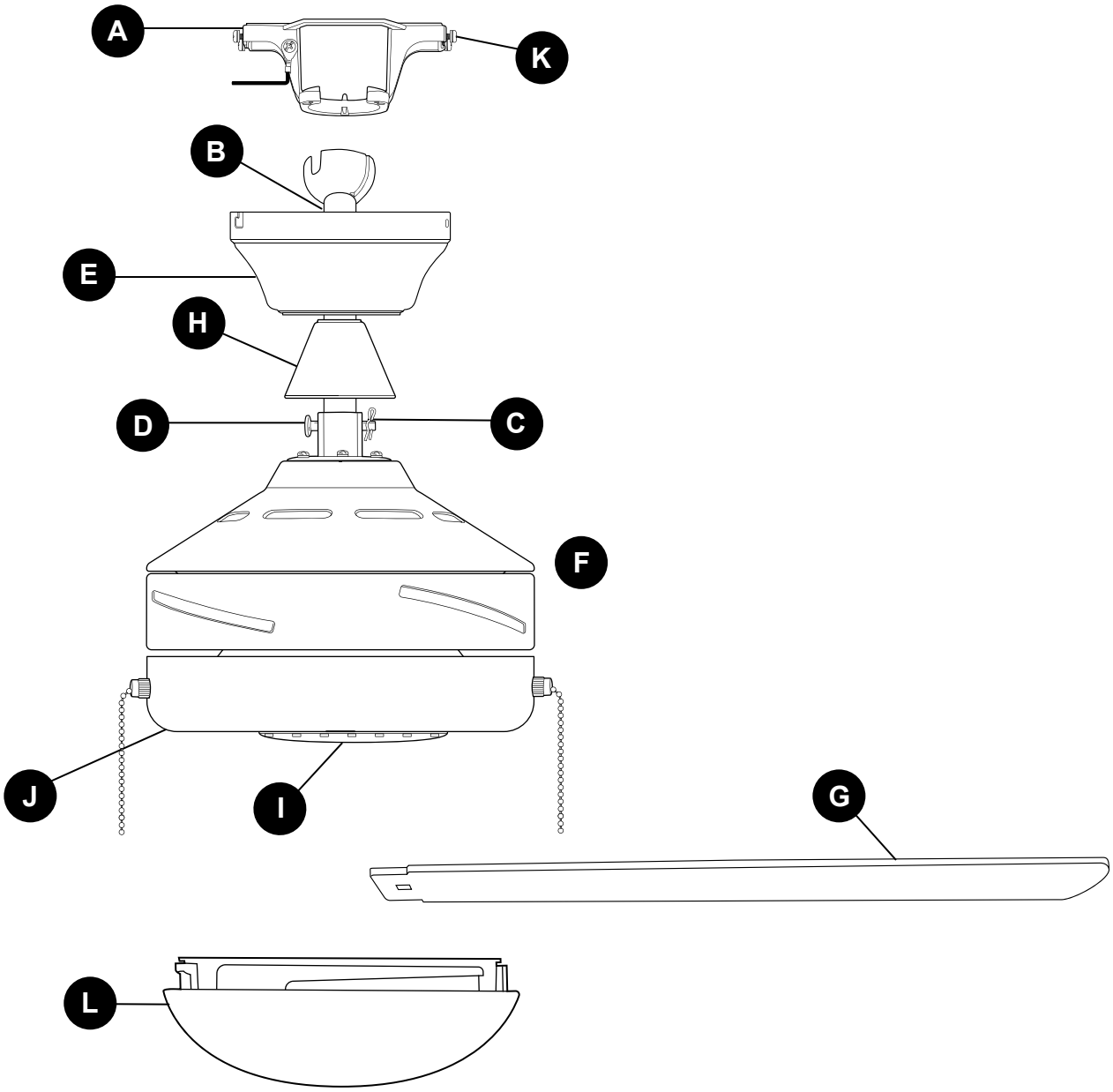

PART	DESCRIPTION	QUANTITY
A	Mounting Bracket	1
B	Downrod (preassembled)	1
C	Clip (preassembled)	1
D	Pin (preassembled)	1
E	Canopy (preassembled)	1
F	Motor Housing	1

PART	DESCRIPTION	QUANTITY
G	Blade	4
H	Yoke Cover (preassembled)	1
I	LED Light Kit (preassembled)	1
J	Fitter Plate (preassembled)	1
K	Canopy Mounting Screw/ Lock Washer (preassembled)	4
L	Shade	1

⚠ **IMPORTANT REMINDER**: You must use the parts provided with this fan for proper installation and safety.

HARDWARE CONTENTS (shown actual size)

AA

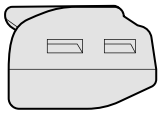

Lever Wire Connector

Qty. 4

BB

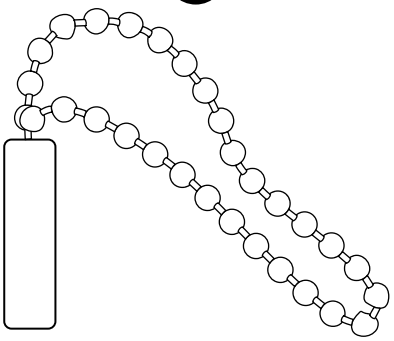

Pull Chain Extension

Qty. 2

PREPARATION

Before beginning assembly of product, make sure all parts are present. Place motor on carpet or on foam to avoid damage to finish. Compare parts with package contents list and hardware contents list. If any part is missing or damaged, do not attempt to assemble the product.

Estimated Assembly Time: 120 minutes

Tools Required for Assembly (not included): Electrical Tape, Phillips Screwdriver, Flathead Screwdriver, Pliers, Safety Glasses, Stepladder and Wire Strippers

Helpful Tools (not included): AC Tester Light, Tape Measure, Do-It-Yourself Wiring Handbook and Wire Cutters

INITIAL INSTALLATION

1. Turn off circuit breakers or fuse and wall switch to the fan supply line leads.

   ⚠ **DANGER**: Failure to disconnect power supply prior to installation may result in serious injury or death.

1

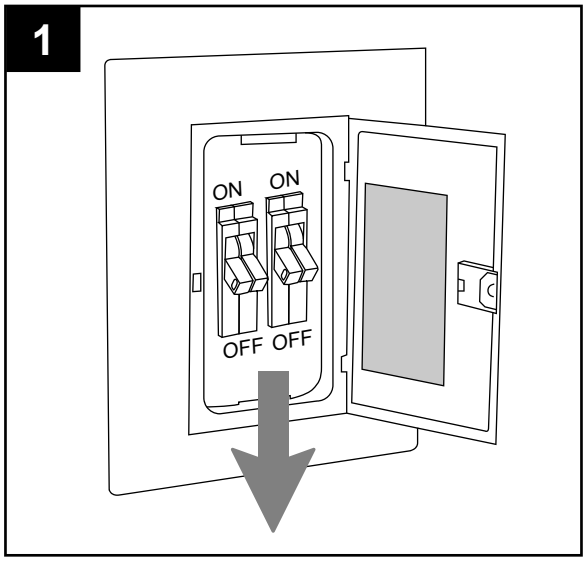

INITIAL INSTALLATION

2. If applicable, remove existing fan and fan parts, including the mounting bracket, from outlet box and disconnect all electrical wiring.

   ⚠ **WARNING:** To reduce the risk of personal injury, use *ONLY* parts provided with your new fan. The use of parts *OTHER* than those provided with this fan will void the warranty.

   Set aside screws, spring washers and flat washers provided with the outlet box for fan installation.

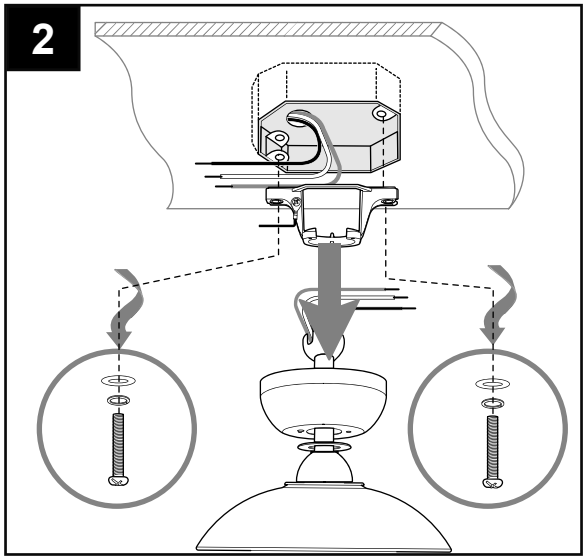

3. Determine mounting method to use.
   A. Downrod mount (standard or angled ceiling).
   B. Closemount (standard ceiling only).

   IMPORTANT: If using the angle mount, check to make sure the ceiling angle is not steeper than 19°.

   ***Helpful Hint:** Downrod-style mounting is best suited for ceilings 8 ft. or higher. For taller ceilings you may want to use a longer downrod (not included). Angle-style mounting is best suited for angled or vaulted ceilings. A longer downrod is sometimes necessary to ensure proper blade clearance. Closemount mounting is more suitable for ceilings lower than 8 ft. high.

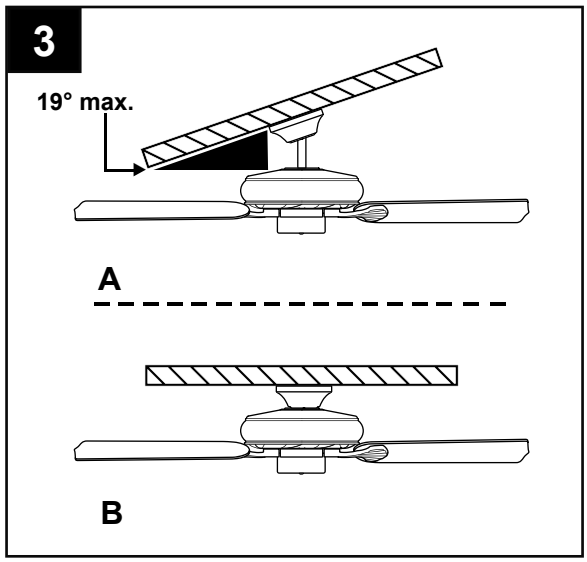

4. Check to make sure blades (G) will be at least 30 in. from any obstruction and at least 7 ft. above the floor.

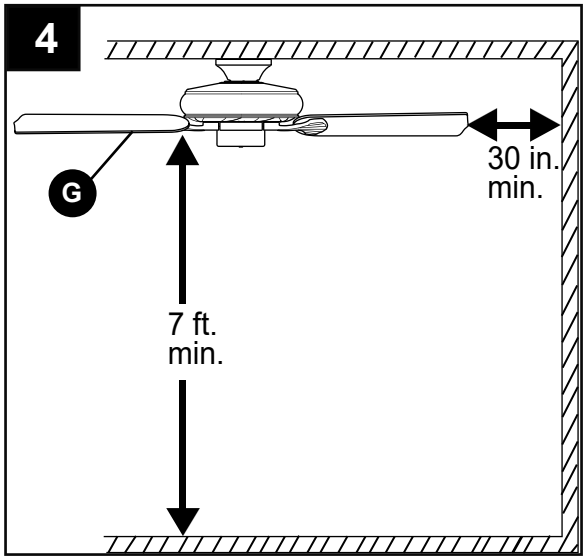

INITIAL INSTALLATION

5. ***If attaching mounting bracket (A) to an existing outlet box (not included) with pre-installed screws***, spring washers and flat washers, slide mounting bracket (A) over the screws. *Then proceed to the following paragraph.* ***If attaching mounting bracket (A) to outlet box where screws/washers were removed***, secure mounting bracket (A) to outlet box using the screws, spring washers and flat washers previously removed in (Step 2, page 7).

   ⚠ **WARNING:** It is very important you use the proper hardware when installing the mounting bracket as this will support the fan.

5a. ⚠ **DANGER:** To reduce the risk of serious injury or death, the outlet box screws MUST be installed somewhere within the long slots of the mounting bracket and then TIGHTENED DOWN COMPLETELY. [Refer to Fig. 5a.]

5b. ⚠ **DANGER:** To reduce the risk of fire, electrical shock, serious personal injury or damage to the fan, make sure outlet box screws DO NOT get installed on or near the wall that separates the keyhole and the long, narrow slot on each side of the mounting bracket. [Refer to Fig. 5b.]

   ⚠ **WARNING:** If using the angle mount, make sure open end of mounting bracket (A) is installed facing the higher point of the ceiling, and ensure the ceiling angle is not steeper than 19°.

   For **DOWNROD-STYLE FAN MOUNTING**, proceed to Step 1 on the following page.

   For **CLOSEMOUNT-STYLE FAN MOUNTING**, skip to page 10.

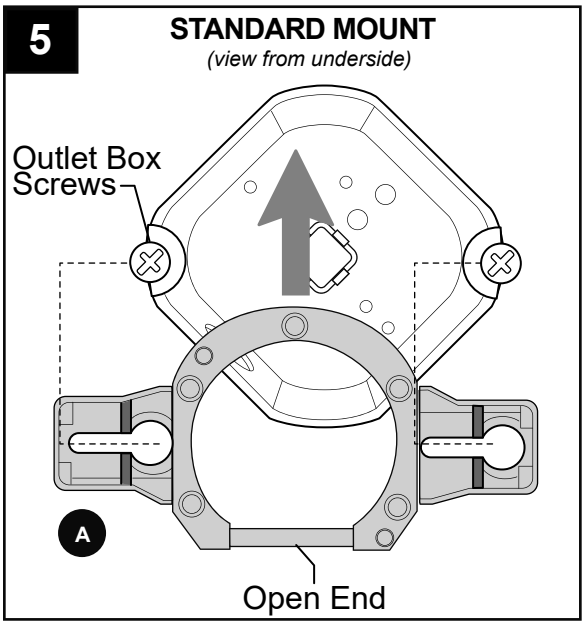

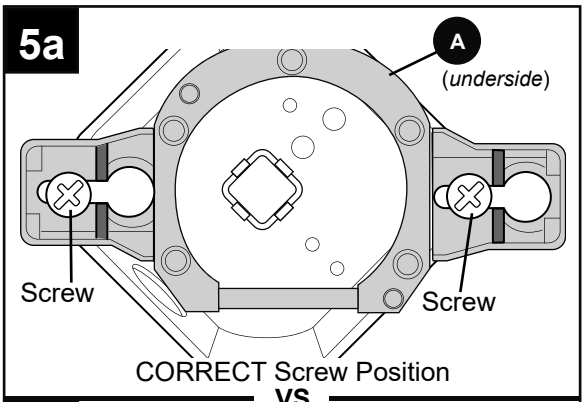

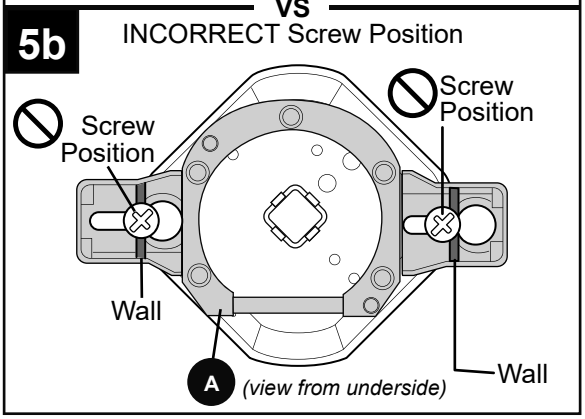

DOWNROD-STYLE FAN MOUNTING

1. Remove and discard plastic wrapping from downrod (B) and wiring.

   Depending on the length of downrod you use, you may need to cut the lead wires back to simplify the wiring. If you decide to cut back the lead wires, it is suggested you do so in the following manner:

   Take the lead wires and make sure you have pulled them all the way through the top of the downrod. Start at the TOP of the hanging ball on the downrod and measure 8 in. of lead wire, then cut the excess wire off with wire cutters (not included).

   NOTE: If you do ***not*** cut back the lead wires, ***Steps 1 and 2 are not necessary and you may proceed to Step 3 instead***.

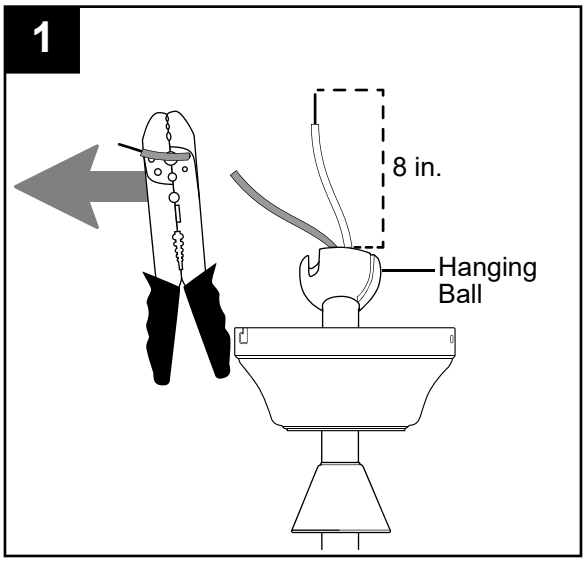

2. If you decided to cut back the lead wires in Step 1, strip 3/8 in. of insulation from end of each wire -- WHITE, BLACK, GREEN and BLUE (if applicable). Twist stripped ends of each strand of wire within the insulation with pliers (not included).

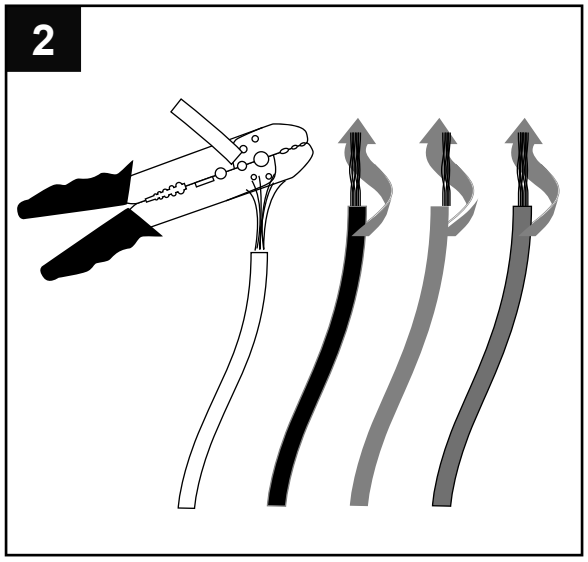

3. Lift canopy (E) and yoke cover (H) on downrod (B). Securely tighten yoke set screws and nut on yoke on top of motor housing (F).

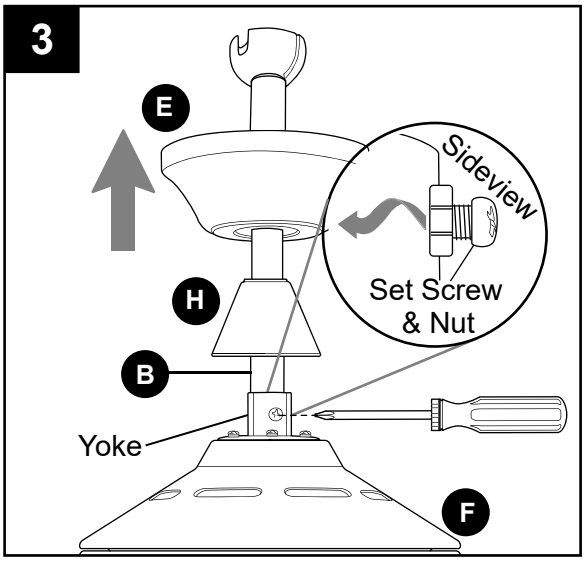

DOWNROD-STYLE FAN MOUNTING

4. Lift motor housing (F) to mounting bracket (A) and install hanging ball of downrod (B) into opening of mounting bracket (A). Align the slot in hanging ball with the tab in mounting bracket (A).

   ⚠ **DANGER:** Failure to align slot in hanging ball with the tab in mounting bracket (A) may result in serious injury or death.

   Continue to **WIRING** on page 12.

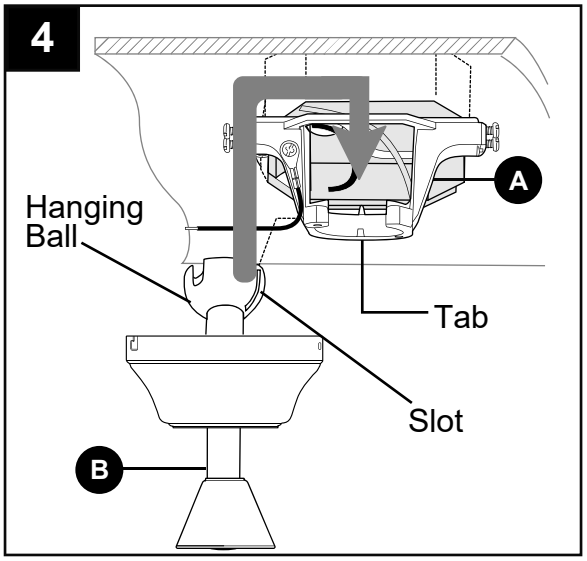

CLOSEMOUNT-STYLE FAN MOUNTING

1a. Lift yoke cover (H) on downrod (B). Remove pin (D) and clip (C) from yoke on motor housing (F).

1b. Partially loosen preassembled set screws and nut in yoke at top of motor housing (F).

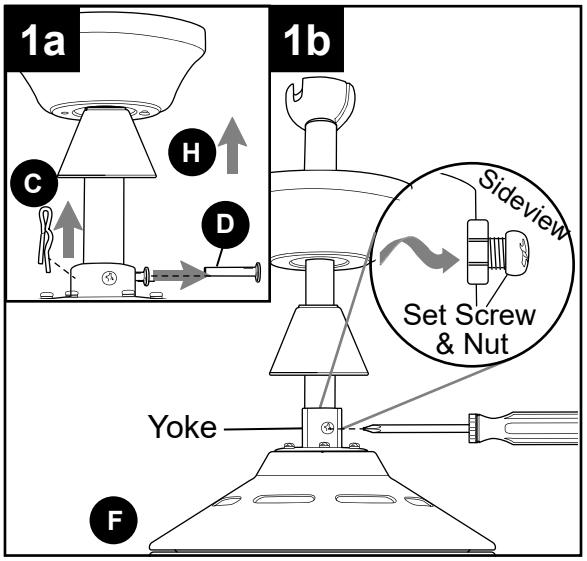

2. Remove downrod (B), canopy (E), and yoke cover (H) from yoke at top of motor housing (F)

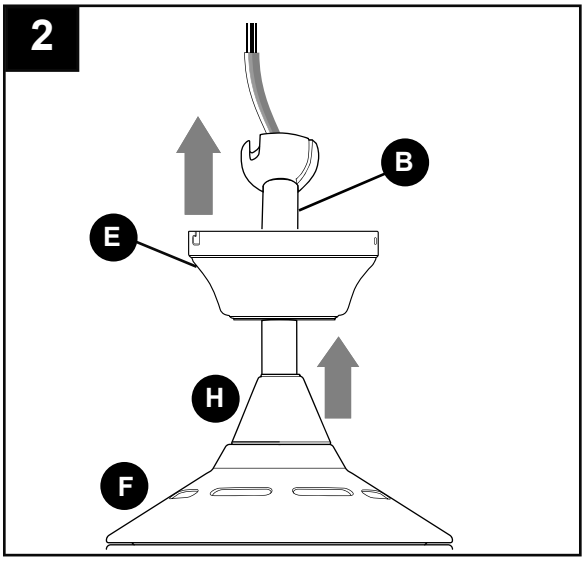

CLOSEMOUNT-STYLE FAN MOUNTING

3. Remove preassembled canopy cover from bottom of canopy (E). **NOTE:** Turn canopy cover to the left (counterclockwise) to remove from canopy (E).

   NOTE: The downrod (B), yoke cover (H) and canopy cover are not used in this type of installation.

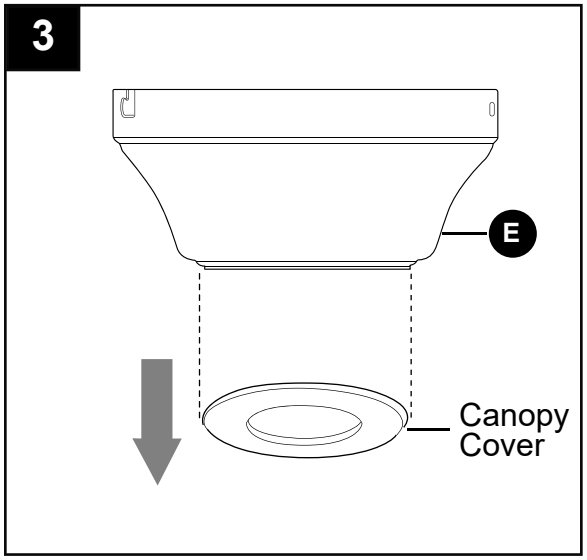

4. Remove every other motor screw and lock washer from top of motor housing (F).

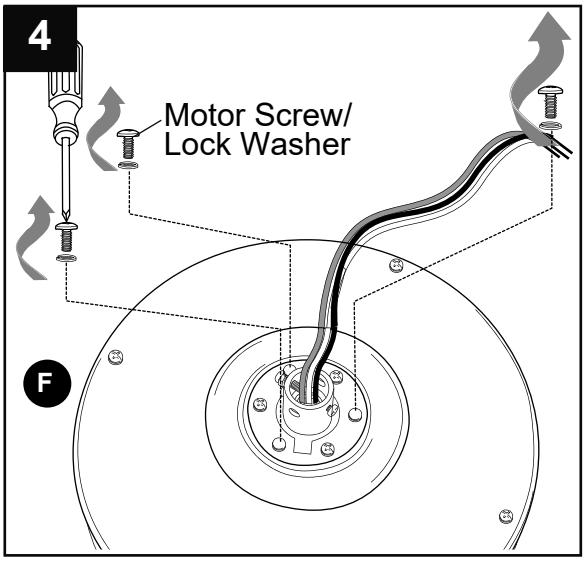

5. Pull wires up through hole in the middle of the canopy (E). Align larger holes in canopy (E) with 3 screws in top of motor housing (F). Attach canopy (E) to motor housing (F) using the three motor screws and lock washers previously removed.

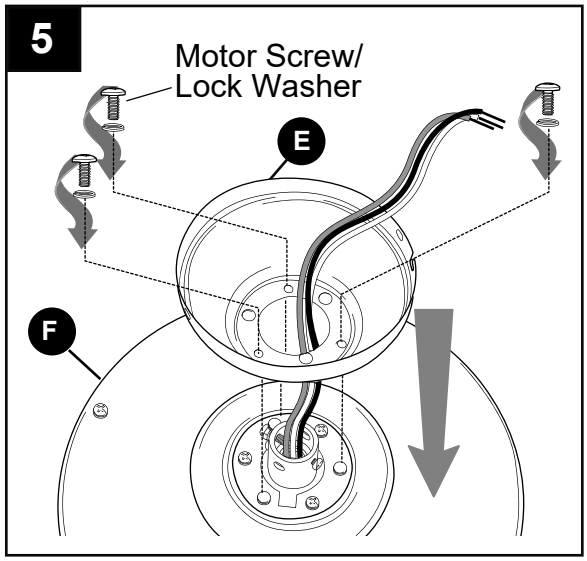

CLOSEMOUNT-STYLE FAN MOUNTING

6. Temporarily hang canopy (E) on the tab on the mounting bracket (A) using one of the *non-slotted* holes in the canopy (E).

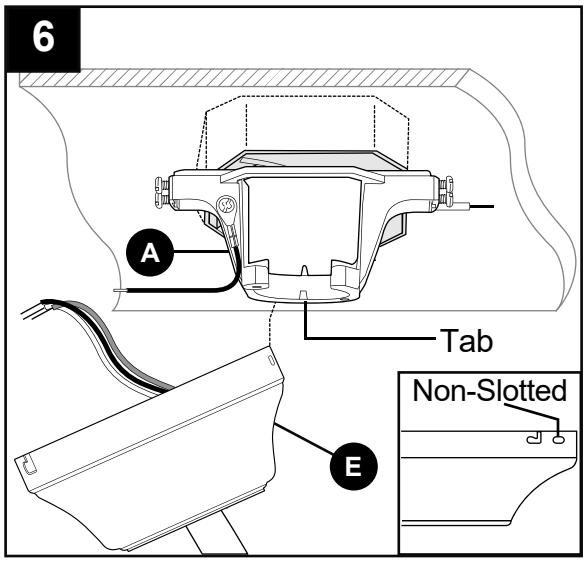

WIRING

WARNING: To reduce the risk of fire, electrical shock or personal injury, lever wire connectors provided with this fan are designed to accept only one 12-gauge house wire and one lead wire from the fan. If your house wire is larger than 12-gauge or there is more than one house wire to connect to the corresponding fan lead wires, consult an electrician for the proper size lever wire connectors to use.

CAUTION: Be sure outlet box is properly grounded and that a ground (GREEN or BARE) wire is present.

WARNING: If house wires are different colors than referred to in the following steps, stop immediately. A professional electrician is recommended to determine wiring.

WARNING: Using a full range dimmer switch (not included) to control fan speed will cause a loud humming noise from fan. To reduce the risk of fire or electrical shock, do NOT use a full range dimmer switch to control fan speed.

NOTE: This fan is remote control adaptable (remote control not included). Please refer to instructions provided with the remote control before proceeding with these wiring instructions.

1. **IMPORTANT:** Each wire connection is made by firmly raising the levers on each lever wire connector (AA), as shown. Then, ONE wire is inserted into each opening.

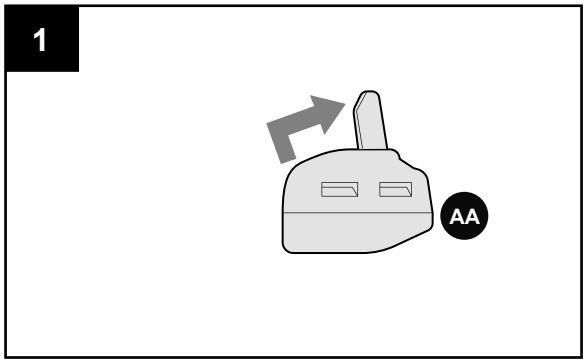

WIRING

2. Choose wiring diagram (Fig. 2a, Fig. 2b or Fig. 2c) that fits your situation and make appropriate wiring connections per your selection in Step 2.

⚠ WARNING: In order for wire connections to be secure, all levers on the lever wire connectors (AA) must be completely returned to their original position as shown in the wiring diagram, option 2a, 2b or 2c, which corresponds to your wiring needs.

2a. **FAN AND LIGHT CONTROLLED BY PULL CHAINS:** Insert each GROUND (GREEN) wire from fan (on downrod (B), if applicable, and mounting bracket (A)) and the BARE/GREEN wire from ceiling into openings in lever wire connector (AA) with three levers.
Insert BLACK wire and BLUE wire from fan and BLACK wire from ceiling into openings in lever wire connector (AA) with three levers.
Insert WHITE wire from fan and WHITE wire from ceiling into openings in lever wire connector (AA) with two levers.

FAN AND LIGHT CONTROLLED BY PULL CHAINS

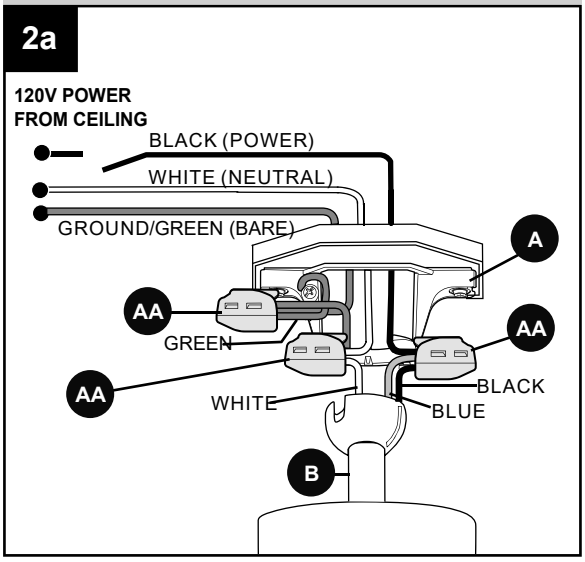

2b. **FAN CONTROLLED BY PULL CHAIN, LIGHT BY WALL SWITCH:** Insert each GROUND (GREEN) wire from fan (on downrod (B), if applicable, and mounting bracket (A)) and the BARE/GREEN wire from ceiling into openings in lever wire connector (AA) with three levers.
Insert BLACK wire from fan and BLACK wire from ceiling into openings in lever wire connector (AA) with three levers.
Insert WHITE wire from fan and WHITE wire from ceiling into openings in lever wire connector (AA) with two levers.
Insert BLUE wire and BLACK (or RED) wire from the independent wall switch for the light into openings in lever wire connector (AA) with two levers.

FAN CONTROLLED BY PULL CHAIN, LIGHT BY WALL SWITCH

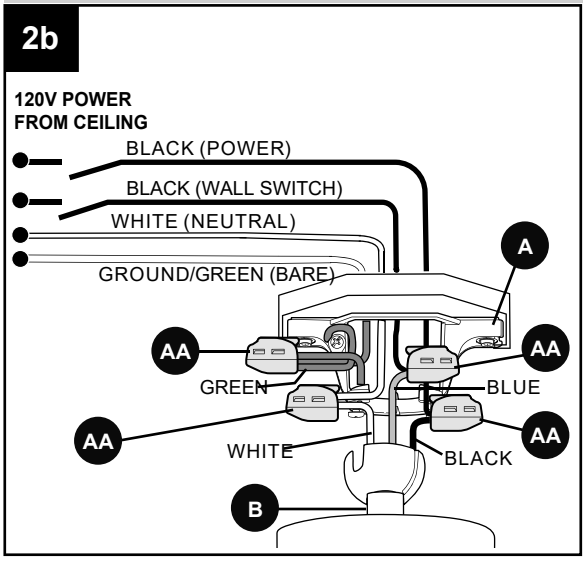

2c. **FAN AND LIGHT CONTROLLED BY TWO WALL SWITCHES:** Insert each GROUND (GREEN) wire from fan (on downrod (B), if applicable, and mounting bracket (A)) and the BARE/GREEN wire from ceiling into openings in lever wire connector (AA) with three levers.
Insert BLACK wire from fan and BLACK (or RED) wire from the independent wall switch for the fan into openings in lever wire connector (AA) with three levers.
Insert BLUE wire from fan and BLACK (or RED) wire from the other independent wall switch for the light into openings in lever wire connector (AA) with two levers.
Insert WHITE wire from fan and WHITE wire from ceiling into openings in lever wire connector (AA) with two levers.

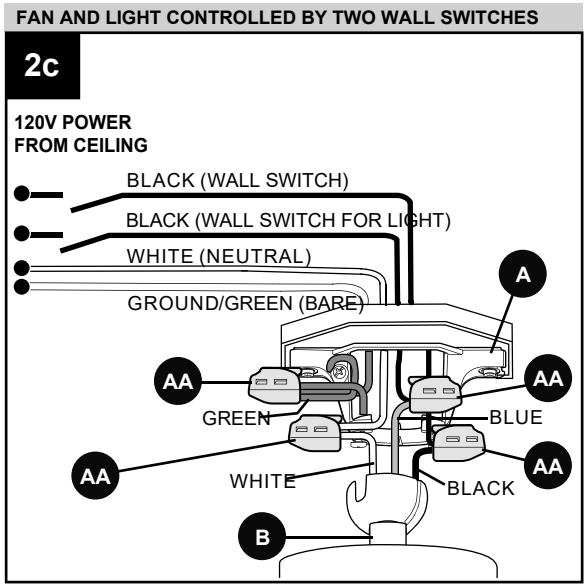

NOTE: BLACK wire is hot power for fan. BLUE wire is hot power for light kit. WHITE wire is common for fan and light kit. GREEN or BARE wire is GROUND.

⚠ **WARNING:** GENTLY pull on wire in each lever wire connector (CC) to confirm the lock is engaged and that all wires are secure.

3. Wrap electrical tape around each individual lever wire connector (AA) down to the wire.

⚠ **WARNING:** Make sure no bare wire or wire strands are visible after making connections. Place GREEN and WHITE connections on opposite side of box from the BLACK and BLUE (if applicable) connections.

Turn spliced/taped wires upward and gently push wires and lever wire connectors (AA) into outlet box.

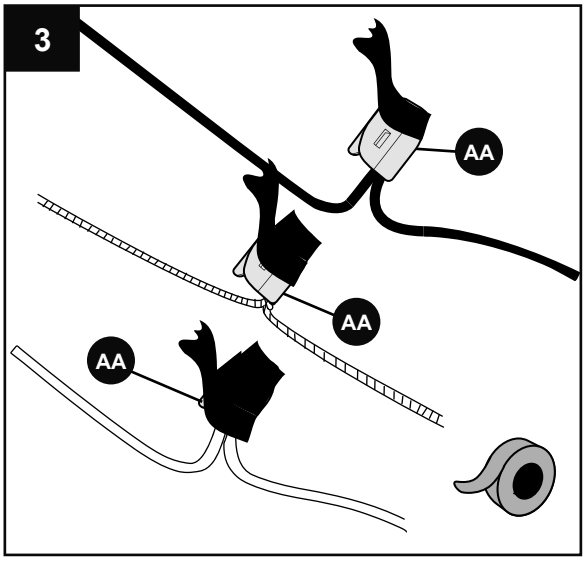

Hardware Used

AA	Lever Wire Connector	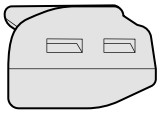	x 4

FINAL INSTALLATION

1. Temporarily lift canopy (E) to mounting bracket (A) to determine which two canopy mounting screws/lock washers (K) in mounting bracket (A) align with slotted holes in canopy (E) and partially loosen these two canopy mounting screws/lock washers (K). Remove the other two canopy mounting screws/lock washers (K).

   Now, lift canopy (E) to mounting bracket (A) again, aligning slotted holes in canopy (E) with loosened canopy mounting screws/lock washers (K) in mounting bracket (A). Twist canopy (E) clockwise to lock. Re-insert the two canopy mounting screws/lock washers (K) that were just removed and tighten all canopy mounting screws/lock washers (K) securely.

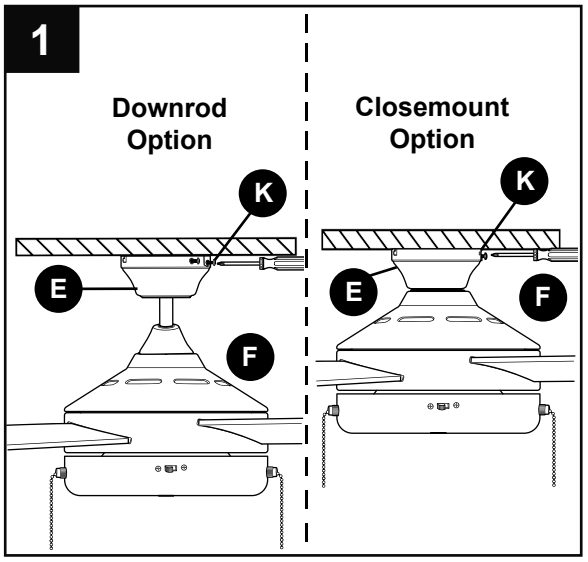

2. **NOTE:** Blades (G) are reversible; however, once installed, they become securely attached. Should you wish to change the blades, refer to instructions on pages 18-19. It is recommended to decide the blade finish to be displayed from the floor BEFORE installing the blades (G).

   Insert one blade (G) through a slot on the band of the motor housing (F). This may require some force.

   ⚠ **CAUTION:** Make sure blade (G) is COMPLETELY inserted into motor housing (F) until an audible pop confirms it is properly secured.

   Repeat for remaining blades (G).

   ⚠ **WARNING:** Failure to properly secure the blades (G) can result in personal injury or death as well as damage to personal property and/or the product itself.

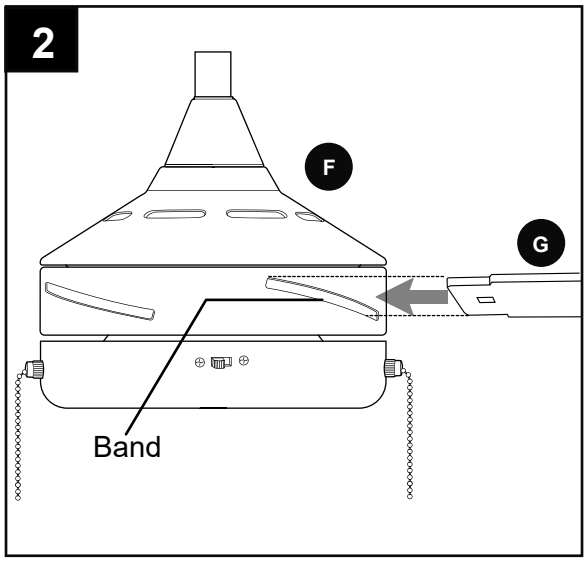

3. Align slots on shade (L) with protrusions on the inside border of preassembled fitter plate (J). Turn shade (L) *clockwise* until it no longer turns.

   NOTE: Pull down gently on the shade (L) to make sure it is completely secured.

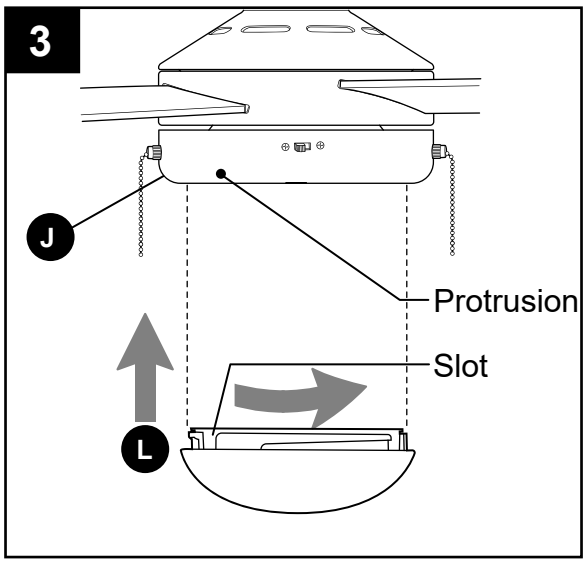

FINAL INSTALLATION

4. Attach pull chain extensions (BB) or custom pull chain extensions (not included) to corresponding fan and light pull chains.

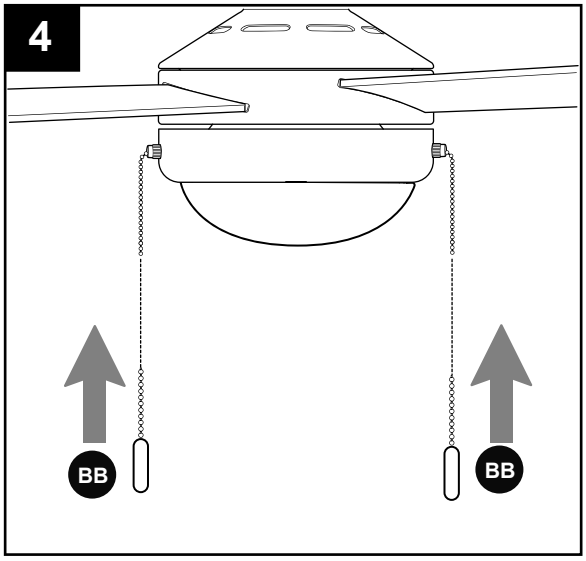

Hardware Used

BB Pull Chain Extension 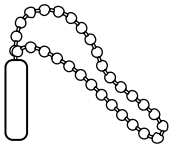 x 2

OPERATING INSTRUCTIONS

1. The pull chain labeled FAN has four positions to control fan speed. One pull is HIGH, two is MEDIUM, three is LOW and four turns the fan OFF.

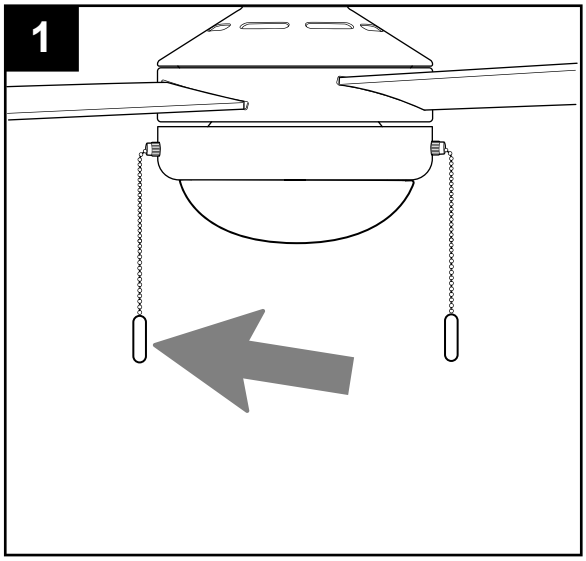

2. The pull chain labeled LIGHT is used to control the light.

   To turn the light ON or OFF, simply pull down on and then let go of the light pull chain.

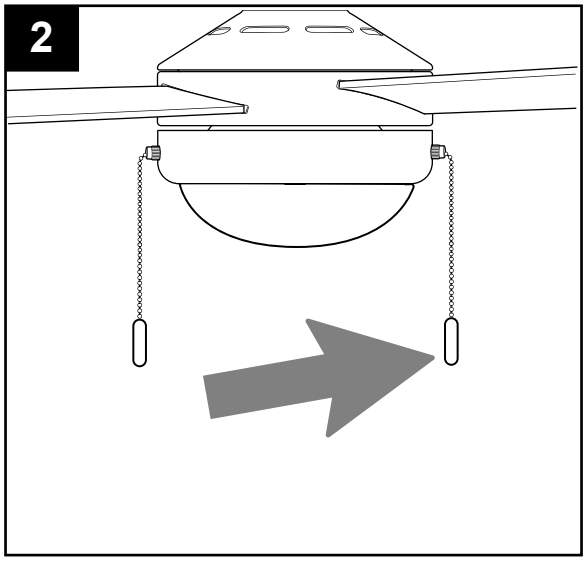

OPERATING INSTRUCTIONS

3. Use the fan reverse switch, located on fitter plate (J), to optimize your fan for seasonal performance. A ceiling fan will allow you to raise your thermostat setting in summer and lower your thermostat setting in winter without feeling a difference in your comfort.

   NOTE: Wait for fan to stop before moving the reverse switch.

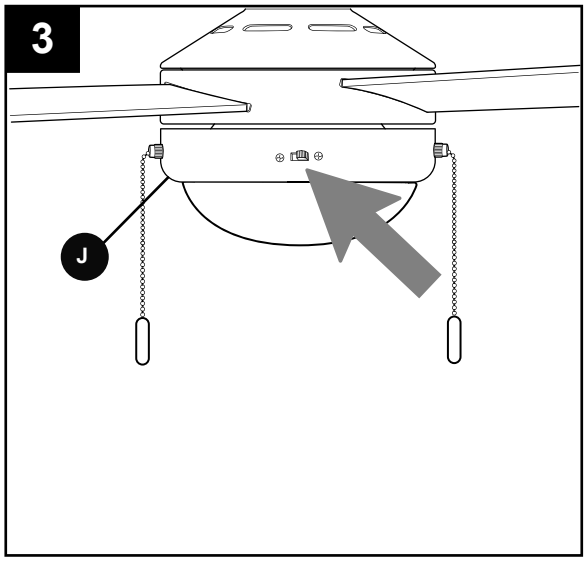

3a. In ***warmer*** weather, setting the reverse switch in the *LEFT* position will result in downward airflow creating a wind chill effect.

3b. In ***cooler*** weather, setting the reverse switch in the *RIGHT* position will result in upward airflow that can help move stagnant, hot air off the ceiling area.

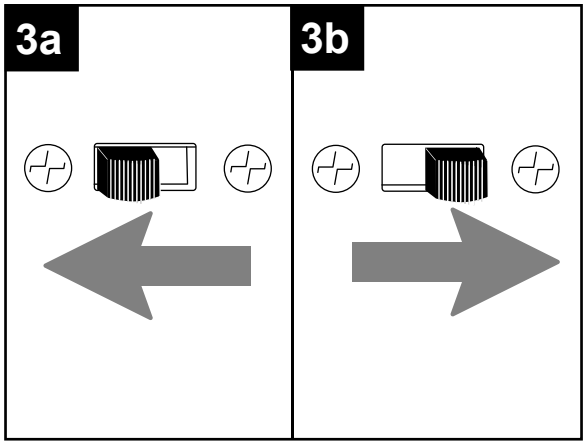

3c. **IMPORTANT**: Reverse switch must be set either ***completely*** *LEFT* or ***completely*** *RIGHT* for fan to function. If the reverse switch is set in the *middle* position, fan will not operate.

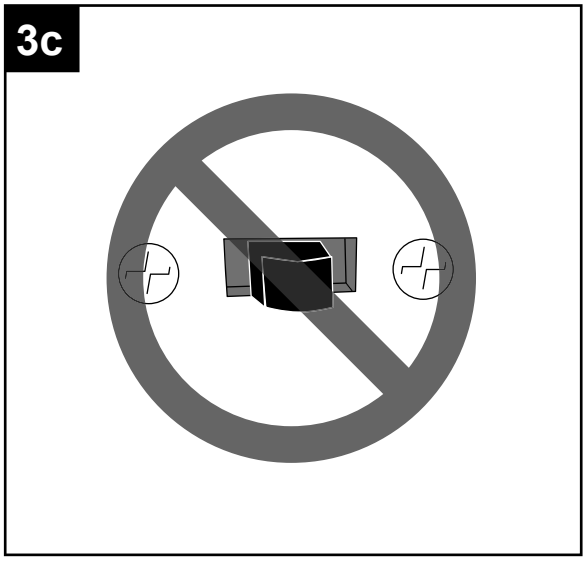

BLADE REPLACEMENT

1. If blade (G) needs to be removed, first remove shade (L) turning it counterclockwise and gently pull down.

   Locate and partially loosen two fitter plate screws in slotted holes on LED light kit (I). Remove the other fitter plate screw on LED light kit (I) and save for later use. Twist LED light kit counterclockwise to remove from fitter plate (J). Disconnect BLUE and WHITE molex connections.
   IMPORTANT: Do NOT remove larger screws on underside of fitter plate (J).

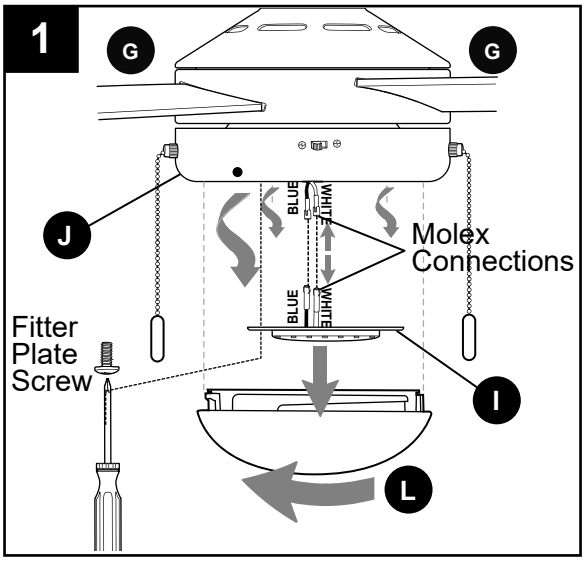

2. Locate and partially loosen two motor plate screws in slotted holes inside of fitter plate (J). Remove the other motor plate screw on fitter plate (J) and save for later use.
   Twist fitter plate (J) counterclockwise and carefully disconnect male and female plugs to remove fitter plate (J) from motor housing (F).

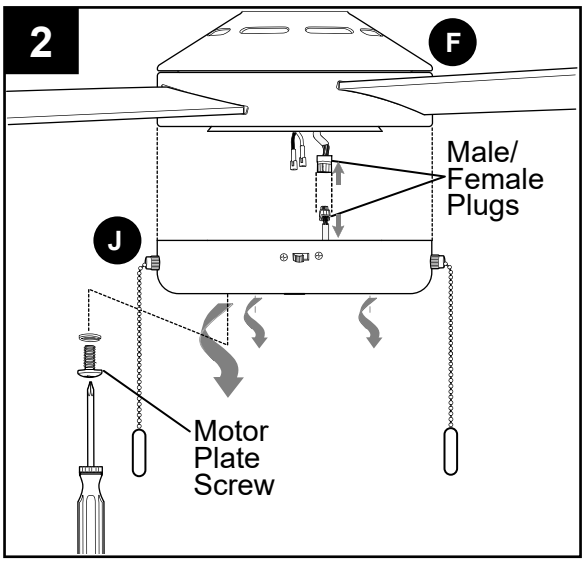

3. From underside of motor housing (F), locate center tab holding the blade (G). With a flathead screwdriver (not included), carefully and gently lift center tab and pull blade (G) out to remove.

   Repeat for any other blades (G) you wish to remove.

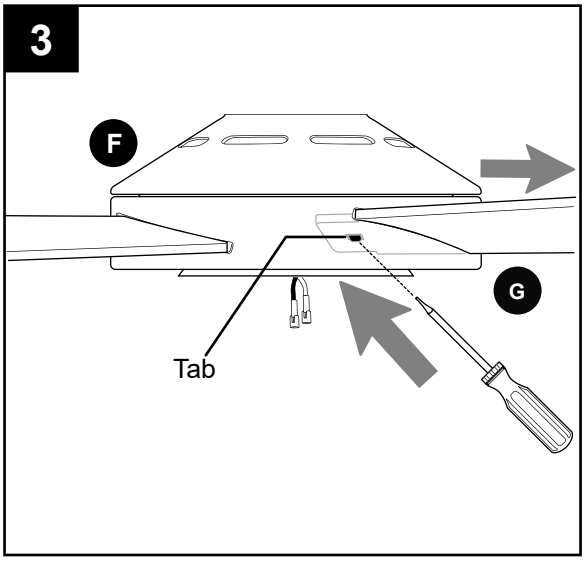

BLADE REPLACEMENT

4. Install blade(s) (G) according to instructions in Step 2, page 15.

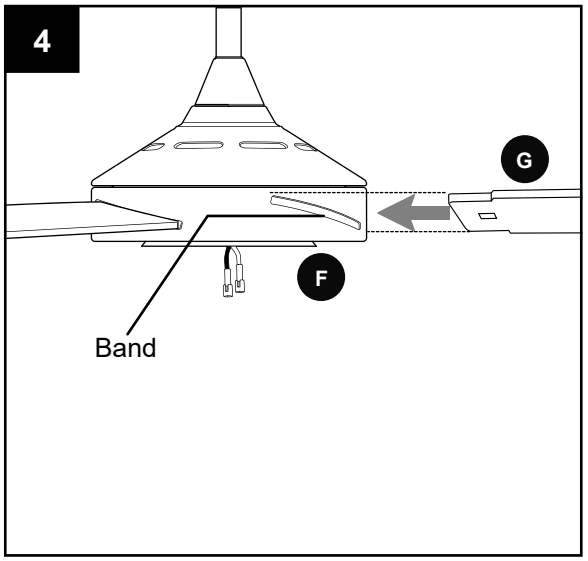

5. Reconnect male and female plugs from motor housing (F) and fitter plate (J), matching up the colors on the plugs for correct fit. Make sure plugs connect tightly. Replace fitter plate (J) aligning slotted holes in fitter plate (J) with loosened motor plate screws. Twist fitter plate (J) to lock. Re-insert the motor plate screw that was removed and securely tighten all three motor plate screws.

   Reconnect WHITE wire from LED light kit (I) to WHITE wire from motor housing (F). Reconnect BLUE wire from LED light kit (I) to BLUE wire from motor housing (F). Make sure molex connections are secure.

   Replace LED light kit (I), aligning slotted holes in LED light kit (I) with loosened fitter plate screws. Twist LED light kit (I) to lock. Re-insert the fitter plate screw that was removed and securely tighten all three fitter plate screws.

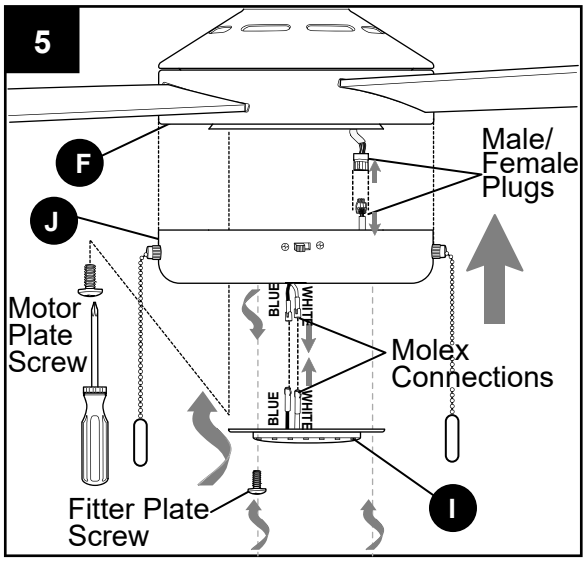

6. Replace shade (L) according to instructions in Step 3, page 15.

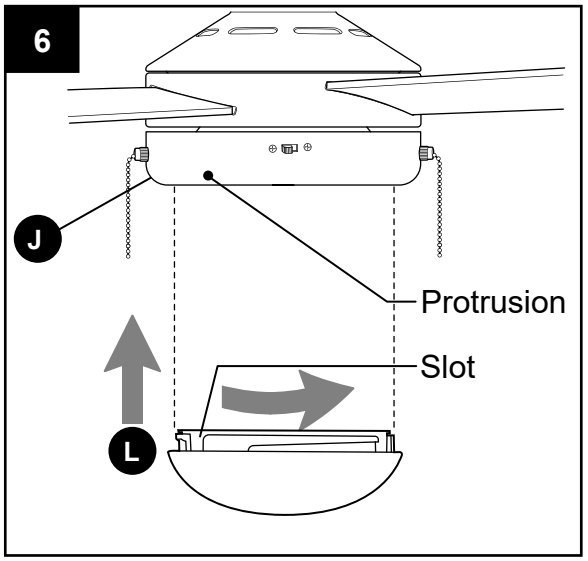

CARE AND MAINTENANCE

At least twice each year, lower canopy to check downrod assembly (if applicable), and then tighten all screws on the fan. Clean motor housing with only a soft brush or lint-free cloth to avoid scratching the finish. Clean blades with a lint-free cloth. You may occasionally apply a light coat of furniture polish to wood blades for added protection.
IMPORTANT: Shut off main power supply before beginning any maintenance. Do not use water or a damp cloth to clean the ceiling fan.

Total wattage for the light kit for this fan is 18 watts; do not attempt to replace the LEDs.

TROUBLESHOOTING

⚠ **WARNING**: Before beginning work, shut off the power supply to avoid electrical shock.

PROBLEM	POSSIBLE CAUSE	CORRECTIVE ACTION
Fan does not move.	1. Reverse switch not engaged. 2. Power is off or fuse is blown. 3. Faulty wire connection.	1. Push switch firmly either left or right. 2. Turn power on or check fuse. 3. Turn power off. Loosen canopy and check all connections.
Noisy operation.	1. Blades are loose. 2. Cracked blade. 3. Full range dimmer switch. 4. Fan is new.	1. Make sure blades have been securely attached according to instructions on page 15. If necessary, refer to "Blade Replacement" section on page 18. 2. Replace blade. 3. Replace with an approved speed control device. 4. Allow fan a “break in” period of a few days, especially when running the fan at Medium and High speeds.
Excessive wobbling.	1. Blades are loose. 2. Fan not securely mounted. 3. Fan too close to vaulted ceiling. 4. Set screw(s) on motor housing yoke is (are) not tightened properly. 5. Set screw on hanging ball is not tightened properly.	1. Make sure blades are completely inserted and secured with a “pop”. 2. Turn power off. Carefully loosen canopy and verify that mounting bracket is secure. 3. Use a longer downrod or move fan to another location. 4. Tighten yoke set screw(s) securely. 5. Carefully loosen and lower canopy and verify that set screw on hanging ball is tightened securely.
Fan operates but light fails.	1. Wires in canopy not wired properly. 2. Wall switch to light is off.	1.Check wires in canopy and, if necessary, re-wire according to instructions on pages 12- 14. 2. Make sure that wall switch to light is on.

NOTE: A small amount of "wobble" is normal and should not be considered a defect.

LIMITED LIFETIME WARRANTY

Set forth below, the manufacturer warrants the fan motor for this ceiling fan to be free from defects in workmanship and material for the life of the product. Also, subject to the limitations below, the manufacturer warrants all ceiling fan parts (“ceiling fan parts” excludes the motor and parts made in whole or in part with glass) to be free from defects in workmanship and material for a period of one year after the date of purchase by the original purchaser at retail.

All claims must be made by the original purchaser, whether such purchaser purchased the product through a store or contractor. Ceiling fan part defects must be reported within the first year from the date of purchase. Parts made in whole or in part with glass and the finishes of metal and other surfaces are not warranted.

Purchasers are responsible for all costs of removing and reinstalling the product. Any damage to any part caused by ordinary wear and tear, accident, misuse, or improper installation, is not covered by this warranty. The manufacturer assumes no responsibility whatsoever for fan installation. Any service performed by a non-licensed electrician will render the warranty invalid.

The manufacturer’s sole responsibility shall be to repair or replace the motor, parts, or product within the terms stated above. The manufacturer shall not be liable for any loss or damage of any kind, including any incidental or consequential damages resulting directly or indirectly, from any breach of warranty, express or implied, or any other failure of this product. Some states do not allow the exclusion or limitation of incidental or consequential damages so this limitation may not apply to you.

If the original purchaser ceases to own the fan, this warranty is voided.

Should the purchaser encounter a problem with your fan related to defects in workmanship or materials within the warranty period associated with the defective part, the manufacturer agrees to replace the defective part without charge, or at its option, to replace the ceiling fan with a comparable or superior model.

The manufacturer’s warranties are limited to the written warranties set out in this ceiling fan limited lifetime warranty. All other express and implied warranties, including, without limitation, the implied warranty of fitness for a particular purpose and the implied warranty of merchantability are disclaimed. Some states do not allow the disclaimer of implied warranties, so this disclaimer may not apply to you.

REPLACEMENT PARTS LIST

All parts are replaceable (see parts list in “Package Contents” on Page 5), however, only the parts listed below are under warranty. For replacement parts, call our customer service department at **800-527-1292**, 8:30 a.m. - 5 p.m., CST, Monday - Friday.

PART	DESCRIPTION	PART #
A	Mounting Bracket	6838216-A
B	Downrod	6838216-B
E	Canopy	6838216-E
G	Blade	6838216-G

