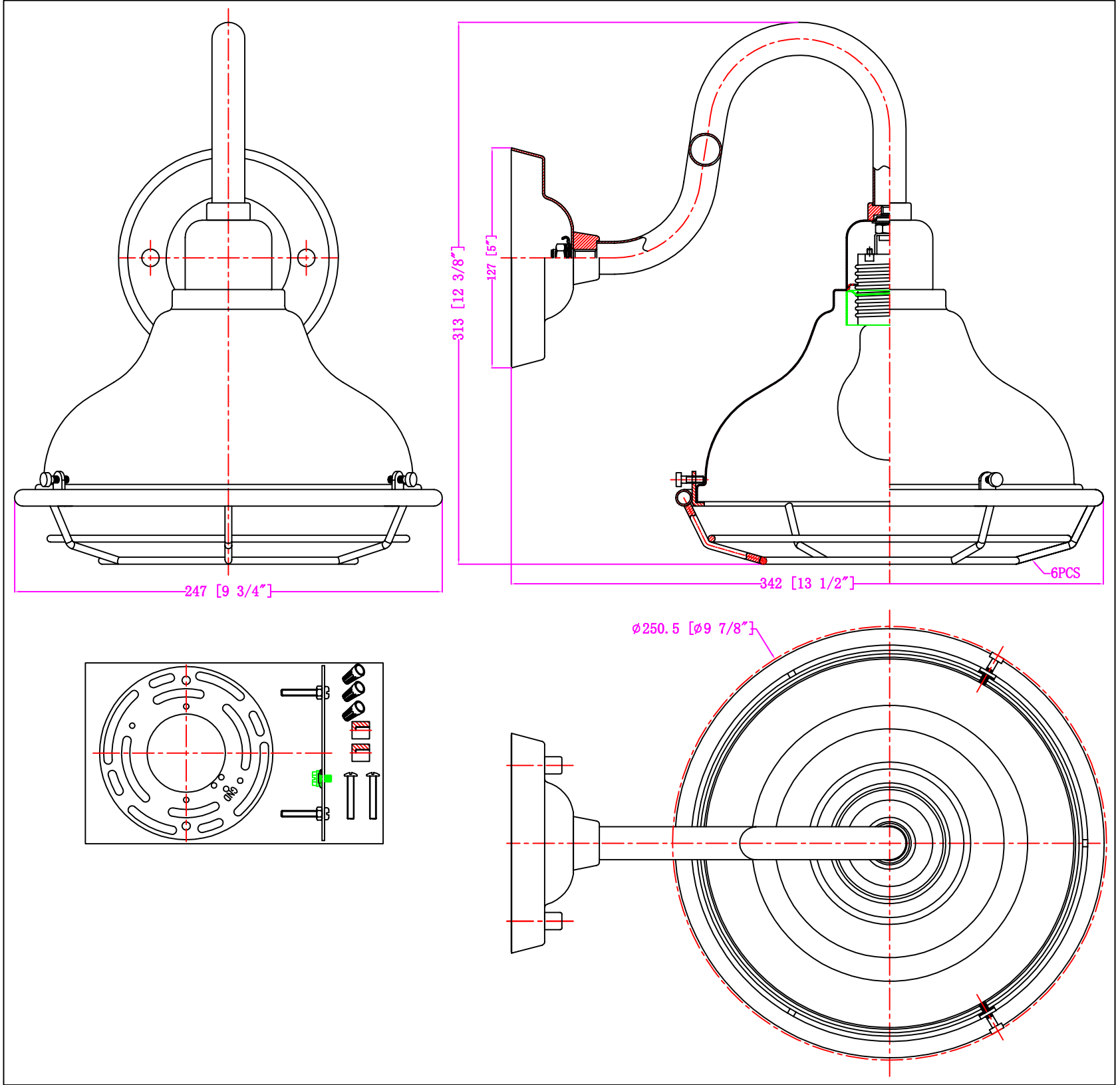
247 [9 3/4"]
313 [12 3/8"]
127 [5"]
342 [13 1/2"]
6PCS
ø250.5 [ø9 7/8"]