Installation instructions and illustrations.

A foryou open thepacking box,ploase check the parts in the box carefully by comparing the drawings if not ,please contact the customer service promptly

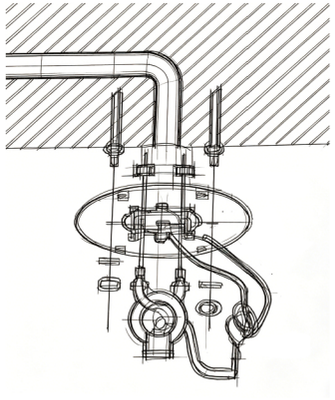

1. Mark the position of hanging plate hole on the topof cement.

2.According to the size of the expansion screwopen a hole on the cement ceiling, and thenknock the expansion screw into the celling holewith the M6 teeth exposed

Remove the nut, fix the hanging plate on theexpansion screw, then pad the gasket, and thenlock the hanging plate on the ceiling with the nutto ensure that the connection between thehanging plate and the expansion screw isenough to bear the weight of the lamp body!

installation Notes!

1.Suitable for 110v 50 Hz power supply, lamp power less than60 W
2.iease wear gloves during installalion to avoid scratcning thesurface of lamps and wires.
3.Do not instail on wet ceiling. The installation environment should beventiiated and dry.
4. The lamp should not be cleaned with water or acid or gas; Only wipewith a clean soft cloth.
5.it should be installed by a professional electrician
6: Vhen cieaning lamps and changing bulbs, the power supply should be cut off.

Installation steps.

1 As shown in the right picture, install the lamp parts first.
2.Wiring method, which connects the same color wires of eachlamp head Then connect with the zero-fire line separately
3 .When installing, the glass is fragile. Take care to handle itlightly.
4.Afler the lamp body is installed, check whether it is locked onthe ceiling.
5.Cut off the power supply when insta!ling or replacing the lightsource.

Installation plan of chandelier Model:

The screw should fasten the hanging plate

Solid walt smnlipox

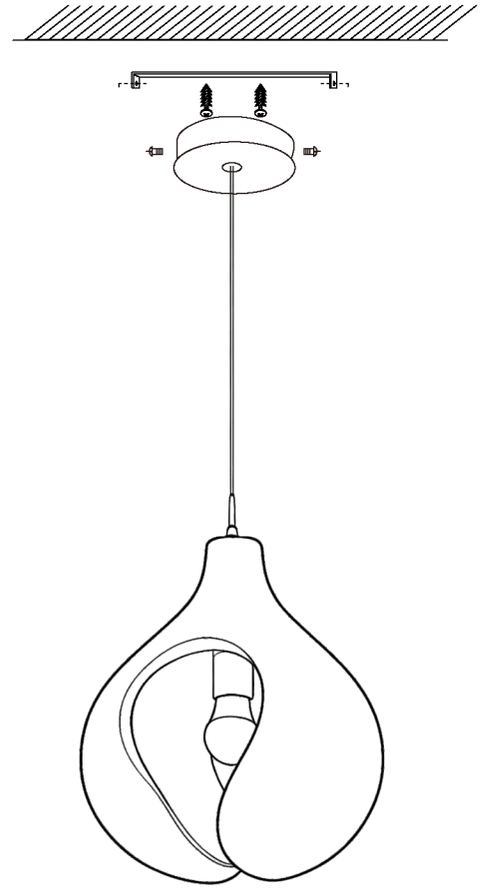

Installation instructions for pendant lamps

(Note: This instruction is for reference only!
Actual productsare based on physical objects.)