Wellworth® | K-3988

Two-piece elongated toilet, dual-flush

Features

- Two-piece design
- Elongated bowl offers added room and comfort
- Left-hand nested trip lever offers a choice of 1.1 or 1.6 gallons per flush (gpf)
- 2-1/8" (54 mm) fully glazed trapway
- Coordinates with other products in the Wellworth collection
- Combination consists of toilet bowl and tank
- Dual-flush technology allows you to choose between a full or partial flush
- Eligible for consumer rebates in some municipalities



Sustainability

Available Colors/Finishes

Color tiles intended for reference only.

	0	White
	96	Biscuit
	7	Black Black

1-800-4KOHLER (1-800-456-4537)
Kohler Co. reserves the right to make revisions without notice to product specifications.
For the most current specification sheet, go to www.kohler.com USA or www.kohler.ca Canada.
10-08-2026 18:56 - US-CA

Codes/Standards

Accessibility standards may require controls to be located on the open side of the toilet.
Plumbing codes may require elongated toilets and elongated, open-front seats in public bathrooms.

ASME A112.19.2/CSA B45.1
EPA WaterSense®

Technical Information

Rough-in:	Standard 12" (305mm)
Flush Type:	Class Five
Flush Rate:	1.1 or 1.6 gpf (4.2 or 6 lpf)
Bowl Shape:	Elongated
Seat-Mounting Holes:	5-1/2" (140 mm)
Waste Outlet:	Floor
Trapway Size:	2-1/8" (54 mm)
Trapway Type:	Exposed
Water Surface Size:	11-1/4" x 8-1/4" (286 mm x 210 mm)
Rim to Water Surface:	5-1/4" (133 mm)

Included Combo Skus

- K-4458 Toilet tank, dual-flush
- K-4198 Elongated toilet bowl

Recommended Products/Accessories

- 1023457 Toilet Wax Ring And Hardware Kit
- 1265114 12" Toilet Supply Line
- [object Object]23726 Drain treatment
- K-9237 Dual-flush trip lever, left hand
- K-5420 Low-profile toilet bolt caps
- K-4636-RL ReadyLatch® Quiet-Close™ elongated toilet seat

Warranty

See website for detailed warranty information.

KOHLER® Toilets and Seats Limited Warranty

1-800-4KOHLER (1-800-456-4537)
Kohler Co. reserves the right to make revisions without notice to product specifications.
For the most current specification sheet, go to www.kohler.com USA or www.kohler.ca Canada.
10-08-2026 18:56 - US-CA

THE BOLD LOOK OF KOHLER.

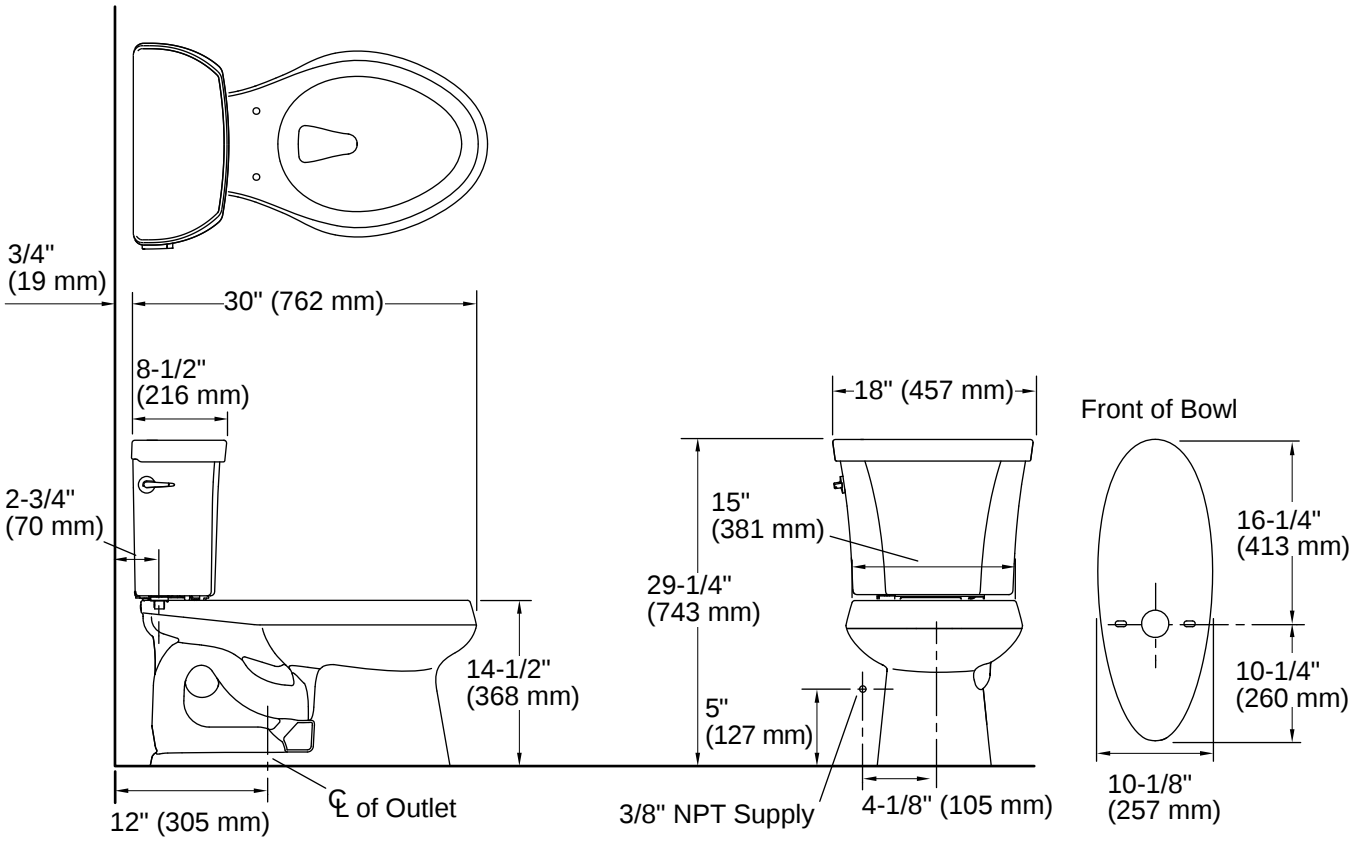

Installation

- Seat sold separately
- Standard 12" (305 mm) rough-in
- Three-bolt quick-connect installation

Installation Notes

Install this product according to the installation instructions.

Product dimensions are nominal and may vary per ASME A112.19.2 tolerances.

1-800-4KOHLER (1-800-456-4537)
Kohler Co. reserves the right to make revisions without notice to product specifications.
For the most current specification sheet, go to www.kohler.com USA or www.kohler.ca Canada.
10-08-2026 18:56 - US-CA

THE BOLD LOOK OF KOHLER.