8

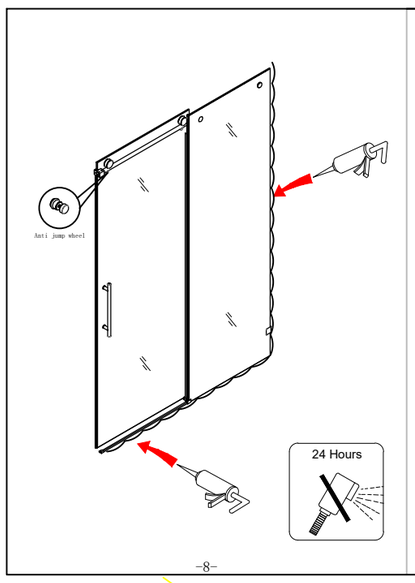

-8-

1

INSTALLATION MANUAL

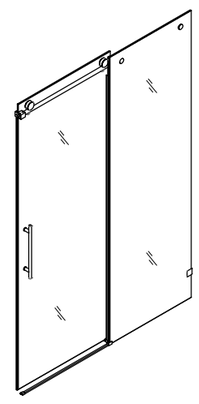

-1-

2

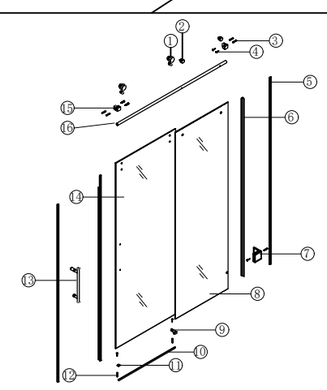

NO.	NAME	PICTURE	Qty
1	Pulley		4
2	Mirror nail		2
3	Expansion tube	Ø8	5
4	ST5*40		5
5	Buffer rubber strip		2
6	Water blocking		2
7	Wall clip		1
8	Fixed glass		1

NO.	NAME	PICTURE	Qty
9	Lower slider		1
10	Water blocking material		1
11	Water blocking plug		1
12	Expansion tube	Ø6	2
13	Pull		1
14	Movable glass		1
15	Pipe sleeve		2
16	Track		1

-2-

7

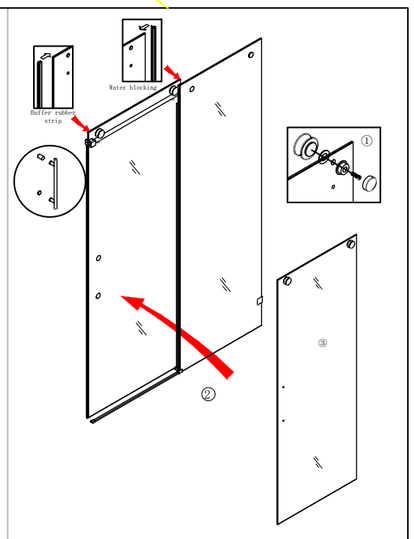

-7-

6

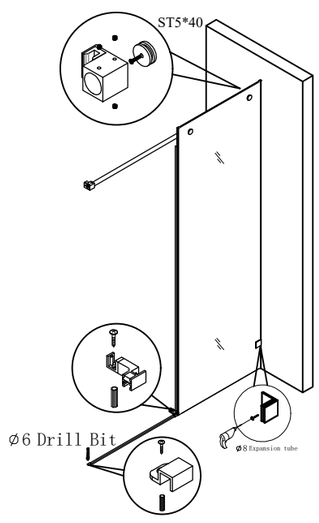

-6-

3

TOOLS REQUIRED (NOT SUPPLIED)

When you're ready to start, make sure that you have the following tools to hand, plenty of space and a clean dry area for assembly.

Two people are needed.

Please note: although these instructions are comprehensive, we always recommend that a technically competent installer should undertake installation.

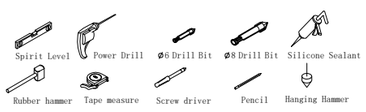

PRE INSTALLATION AND TECHNICAL REQUIREMENTS

All dimensions are shown in millimeters, except where otherwise indicated.

Ensure that the enclosure set is fitted to a level floor and vertical wall surface.

Please note: the wall fixings included with this product are suitable for solid walls only.

Plasterboard or stud walls may require specialist fixings (not supplied).

IMPORTANT SAFETY NOTES

Please handle all glass with care, avoiding knocks or shock loading to all sides and edges.

Safety glass cannot be reworked.

Please take care when drilling into walls to avoid hidden pipes or electrical cables.

AFTERCARE INSTRUCTIONS

Soap and water will be adequate to clean the glass a glass cleaner can be used if required.

In hard water districts, insoluble lime salts may be deposited on the glass. If this deposit is allowed to build up it becomes increasingly difficult to remove and looks unsightly. Regular cleaning will minimise this effect.

-3-

4

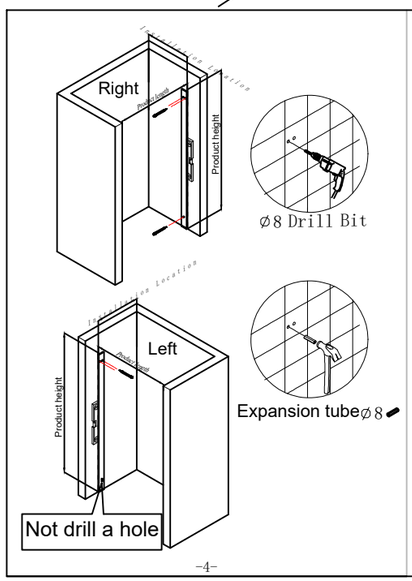

-4-

5

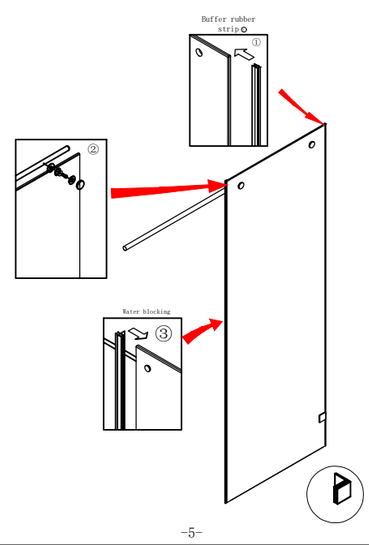

-5-