Forney® Easy Cut™ Plasma Cutter

ITEM# 255 SPECS	APPLICATIONS:	PROCESSES:	INPUT POWER:	AIR REQUIREMENTS:	OUTPUT AMPERAGE RANGE:	DUTY CYCLE:	CUTTING CAPACITY:
	Auto Body Farm & Ranch HVAC Plumbing Contractor	Plasma Arc Cutting (PAC)	120V 50/60Hz	5.5CFM @ 90PSI	10-20A	35% @ 20A 60% @ 16A 100% @ 12A	Clean Cut: 3/16" (4,78 mm) Sever Cut: 1/4" (6,35 mm)

ITEM# 255

INCLUDES:

- ITEM# 255 Forney® Easy Cut Plasma Cutter
- 13′ High Frequency Plasma Torch
- Ground Clamp w/6′ Cable
- 15 to 20A Plug Adapter
- Spare Consumables
- Nylon Carry Strap

Convenient: Weighing in under 17 lbs. along with the included nylon carrying strap make it easy to bring to your project.

Reliable: High frequency torch provides easy arc starts every time.

Powerful: Converts standard household power to 3/16″ of clean cutting power and makes 1/4″ sever cuts.

Generator-Friendly: Requires a minimum of 4,000W continuous output with no low-idle function (or the ability to turn low-idle off) and less than or equal to 5% THD Max.

Expert-Tech® Services: Our technicians are here to keep you and your machine working, ultimately saving you time and money. Forney hires welding technicians to help with any questions you may have, machine based or not.

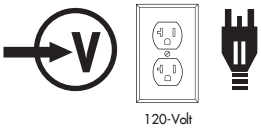

Input Power:
120V
50/60Hz

Cut Capacity:
Clean Cut : 3/16″
Sever Cut : 1/4″

Removable Torch:
Easier transportation and storage.

Constant Fan:
Constant cooling action.

CSA Certified: *This product is CSA certified, ensuring it meets strict safety and performance standards for reliability and safety in any work environment.*

CC/DC/1ph

WELDING IN AMERICA.
SINCE THE BEGINNING.

Forney®

2057 VERMONT DRIVE, FORT COLLINS, COLORADO 80525
1-800-521-6038 • FORNEYIND.COM

P-10974
10/2025_v2

ITEM# 255 SPECS CONTINUED						
Amperage Range	Rated Output	Max Amperage Draw	Air Requirements	Cutting Capacity	Dimensions	Weight
10A - 20A	60% @ 16A	24A	5.5CFM @ 90PSI	Clean Cut: 3/16" Sever Cut: 1/4"	L: 17.4" (440,7 mm) W: 6.6" (167,64 mm) H: 12.4" (314,96 mm)	16.4 lbs (7,4 kg)

CONSUMABLES:

NO.	ITEM DESCRIPTION
1	Shield Cup
2	Cutting Tip/Nozzle
3	Electrode

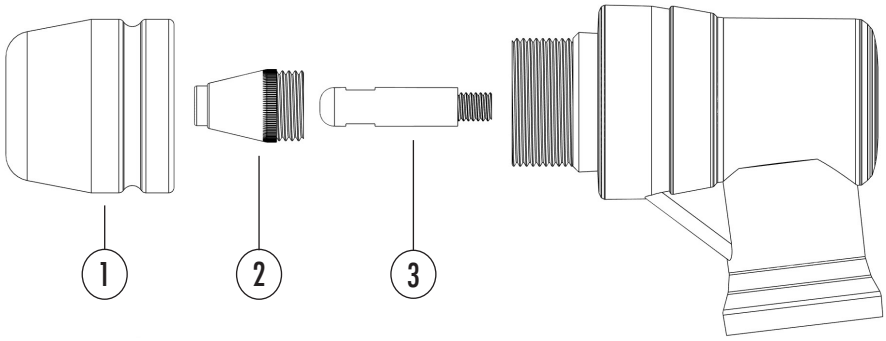

Consumables available in a multi-pack:
High-Frequency Plasma Cutter Consumable Kit -10 Nozzles, 10 Electrodes, 2 Shield Cups (ITEM # 85881)

RECOMMENDED ACCESSORIES:

ITEM# 55312
Barricade Goggles, Green, Shade Number 5

ITEM# 55199
Forney® Easy Weld® Light Duty Welding Gloves (Size L)

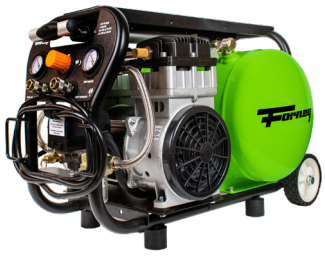

ITEM# 555
Fornair® 2.0 HP, 4 Gal, Oil-Free Air Compressor, 120 PSI, 4.5 CFM

Forney's Expert-Tech® Services Team: Your Trusted Welding Partner
When you choose a Forney welder, plasma cutter, or shop tool, you're investing in more than just a product – you're gaining access to a dedicated team of experts committed to your success. The Forney Expert-Tech Services Team ensures your equipment operates at its best, offering reliable and accessible support whenever you need it.

Forney EXPERT-TECH SERVICES • 1-800-521-6038

Distributed by: