Steel Bathroom Console Sink Base With Glass Shelf

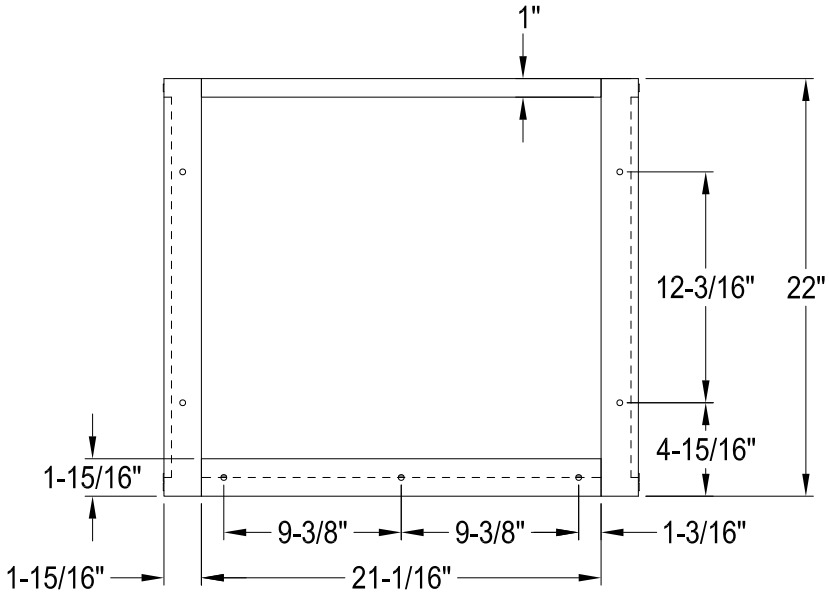

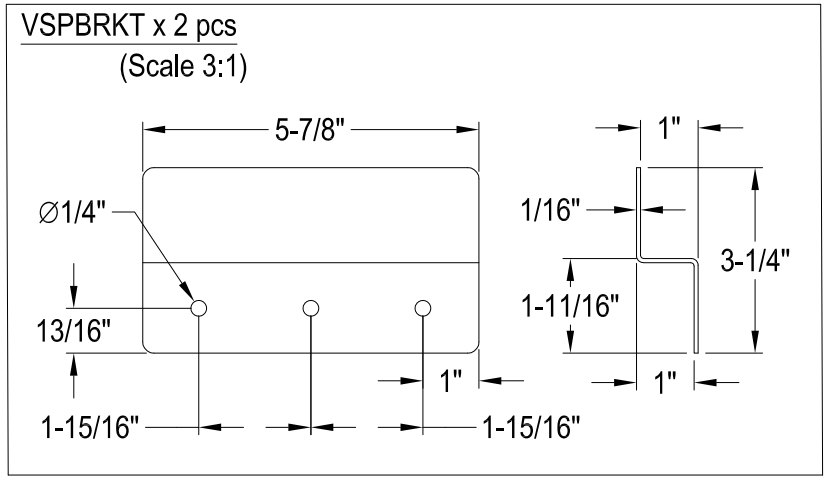

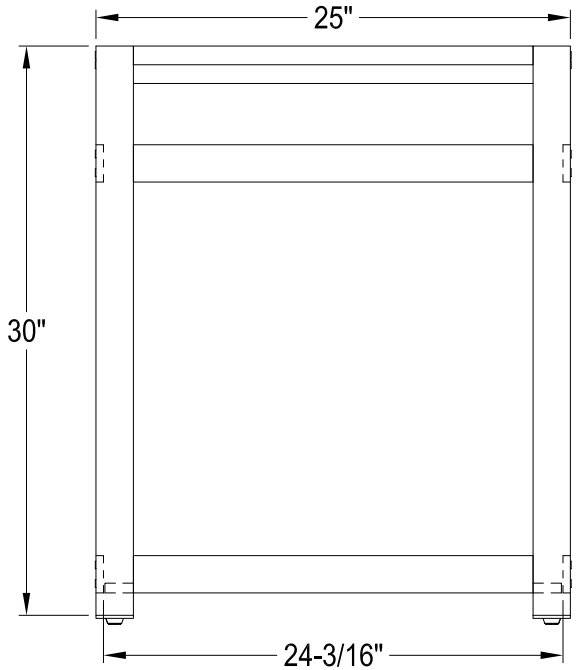

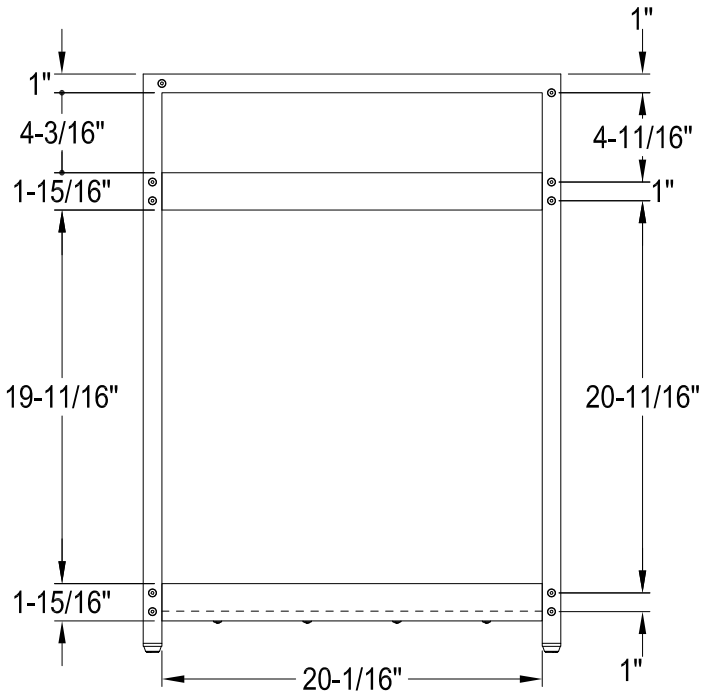

2020-02-B