Assembly Instructions

Caution : You must read this before you proceed

Care & Maintenance



- Not for commercial use. For residential use only.



- Furniture may scratch floors. We recommend using furniture pads to protect your floors.



- Do not put hot items directly on furniture surface.



- Do not clean furniture with harsh cleansers or polish.



- Do not place furniture under direct sunlight.



- Do not place furniture near heating or cooling vents.



- Do not write on furniture without a padded barrier to protect the surface.



- Do not place furniture outside . For indoor use only.



- Stains may be removed with mild soap solution and damp cloth.



- Children should not climb or jump on the furniture.



- Dust and pick-up spills using a clean, non-colored, lint-free cloth.

Please look in **the box** for hardware packs and legs.
Sets often ship in multiple boxes and may arrive a day or two apart.

N761P507326
N761P507327

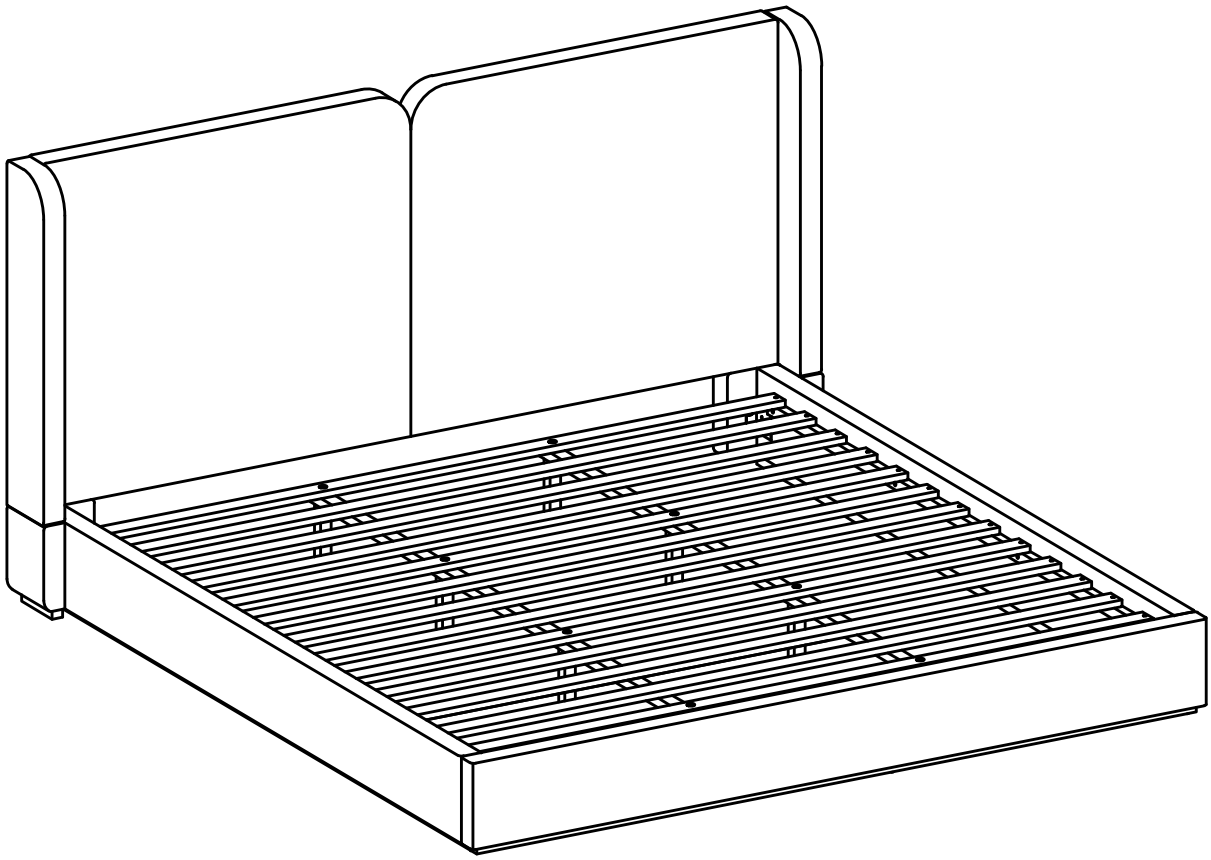

Parts List

N761P507326

Label	Picture	Description	QTY
Ⓐ	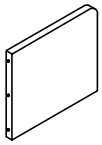	Left Headboard	1
Ⓑ	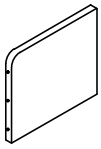	Right Headboard	1
Ⓒ		Left Headboard wing	1
Ⓓ		Right Headboard wing	1

Parts List

N761P507326

Label	Picture	Description	QTY
E		Left Side Leg Frame	1
F		Right Side Leg Frame	1
G		Left Leg Frame	1
H		Right Leg Frame	1
P		Center Legs	8

Hardware

Label	Picture	Description	QTY
1		Allen Wrench	1
2		Flat Washer Ø8 5/16"	50+1
3		Bolt 5/16" x 25mm	8+1
4		Bolt 5/16" x 50mm	25+1
5		Screw 3/16" x 30mm	26+1
6		Bolt 5/16" x 40mm	17+1

Parts List

N761P507327

Label	Picture	Description	QTY
Ⓘ	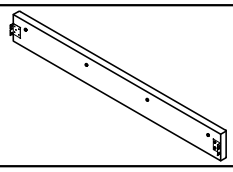	Bed Side Rails	2
Ⓙ	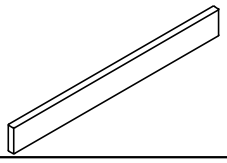	Footboard	1
Ⓚ	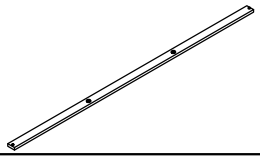	Bed Slats（with center holes）	4
Ⓛ	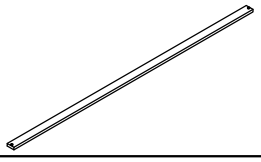	Bed Slats	9
Ⓜ	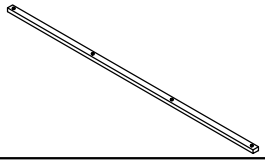	Center Support Rails	2
Ⓝ	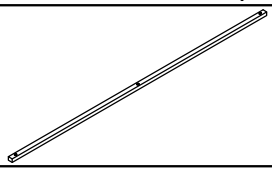	Side Rail Legs	2
Ⓞ	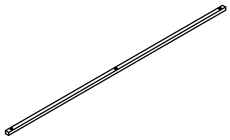	Footboard Leg	1
Ⓠ	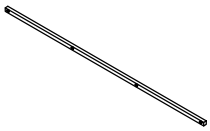	Support Rails	2

Assembly Preparation

Before Beginning Assembly:

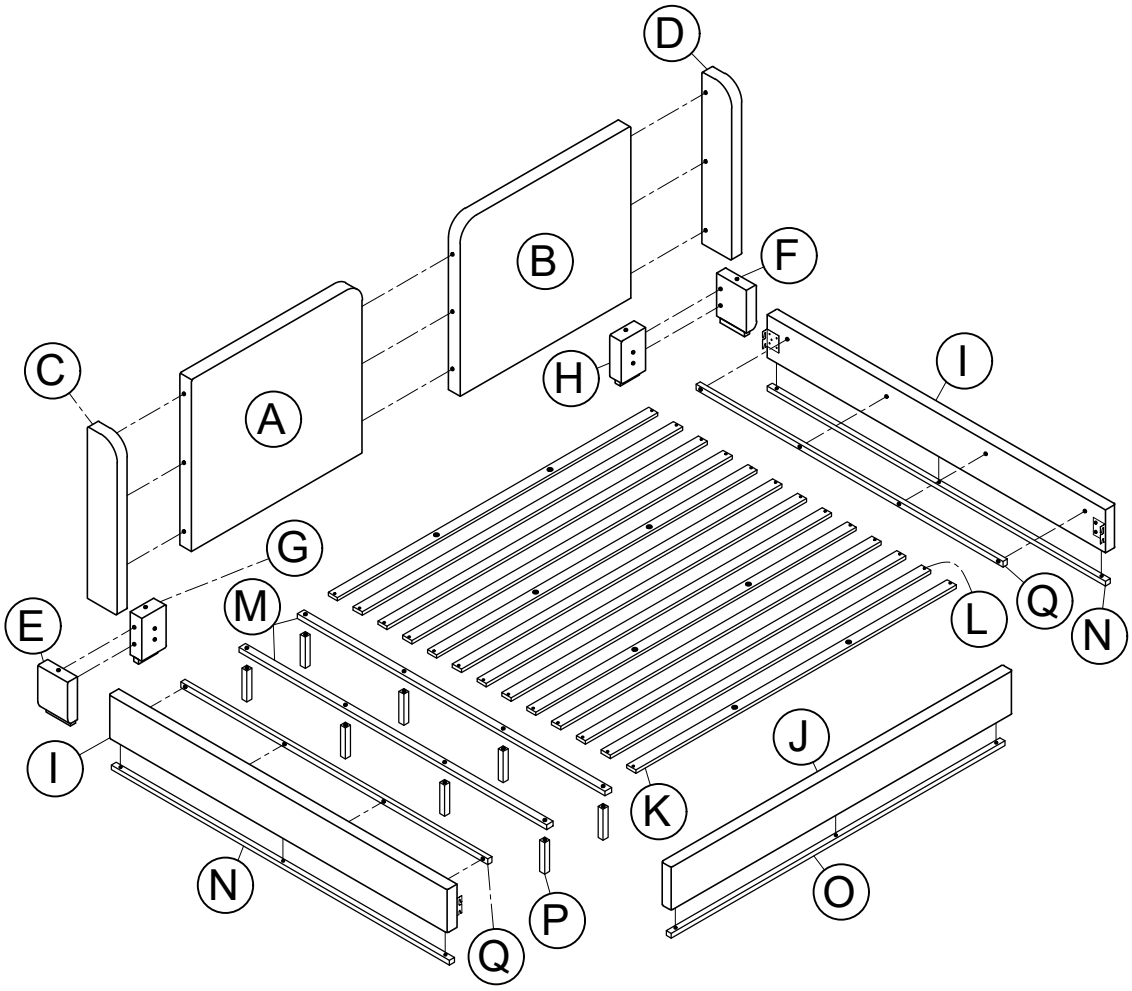

- Read instructions, cover to cover-
- Have 2 adults on hand for assembly-
- Do not assemble on flooring or carpet-
- Assemble on a clean non-marring surface (packing foam)-
- Save all packaging until finished-

Assembly Steps

Overview

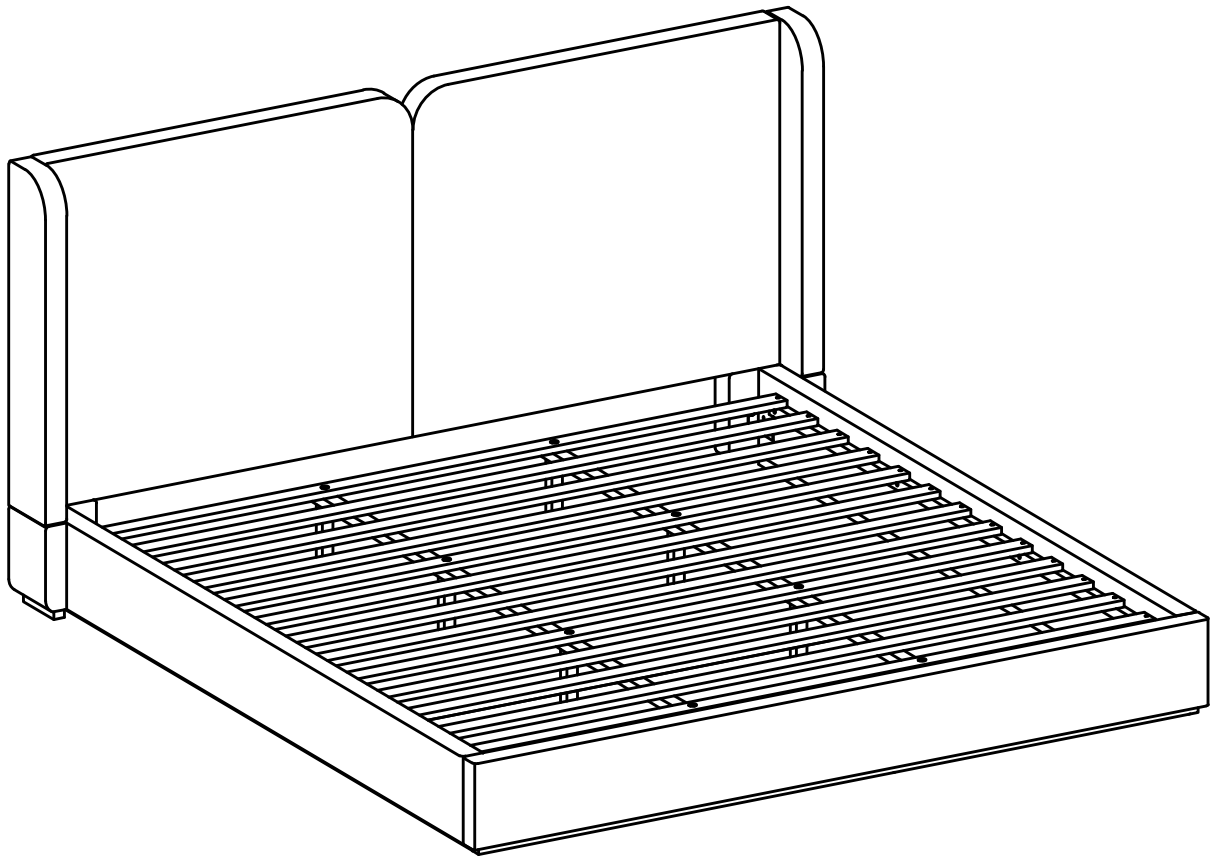

This bed has multiple parts and may require up to some 45 minutes to assemble. To give you an overview of the bed parts, the above picture is to help you put the various parts into perspective. Please read through the instructions below to familiarise yourself with the parts and steps before assembly.

STEP 1: Remove the parts and accessories from the carton .

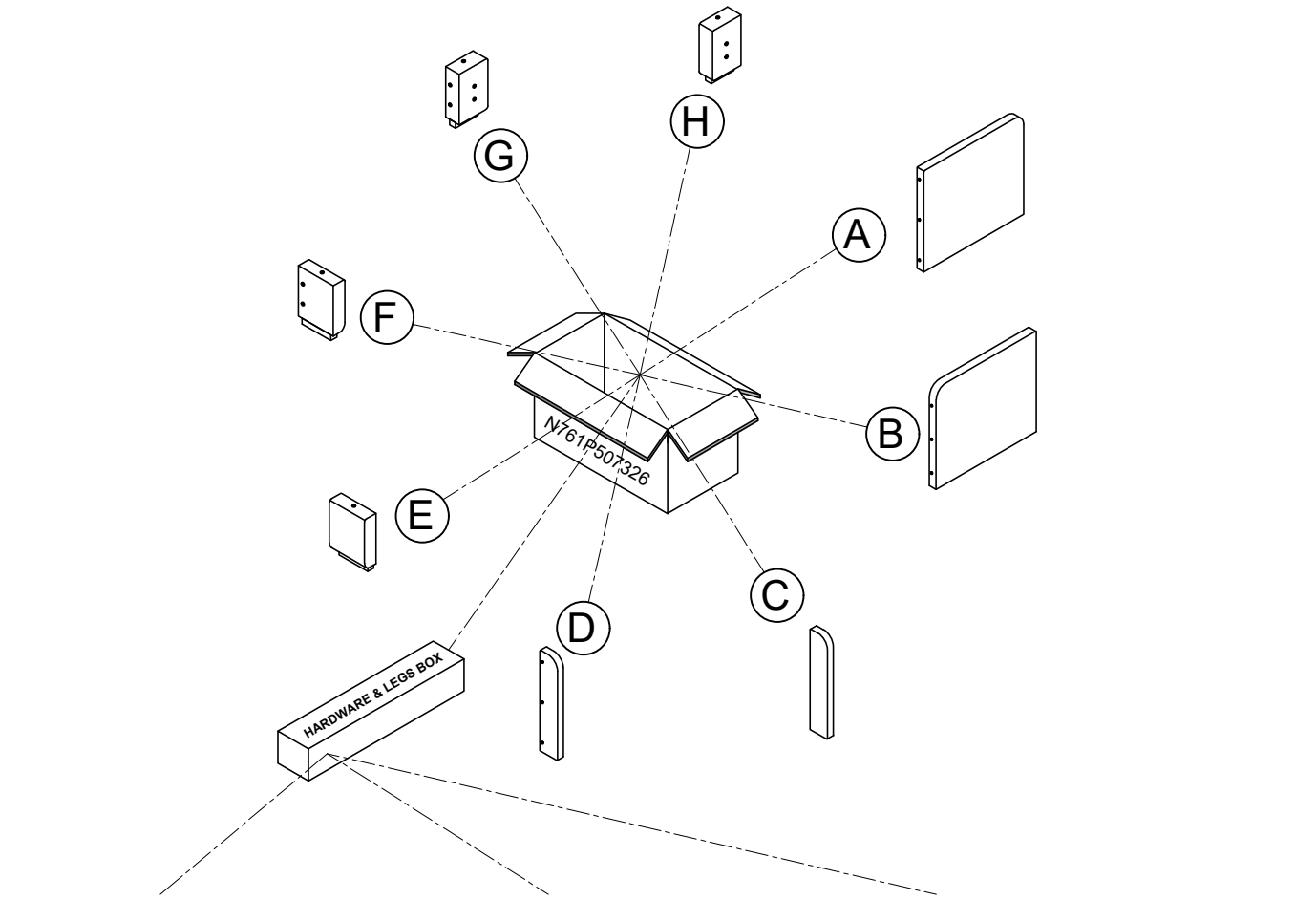

P X 8 | 2 X 50+1 | 4 X 25+1 | 6 X 17+1

1 X 1 | 3 X 8+1 | 5 X 26+1

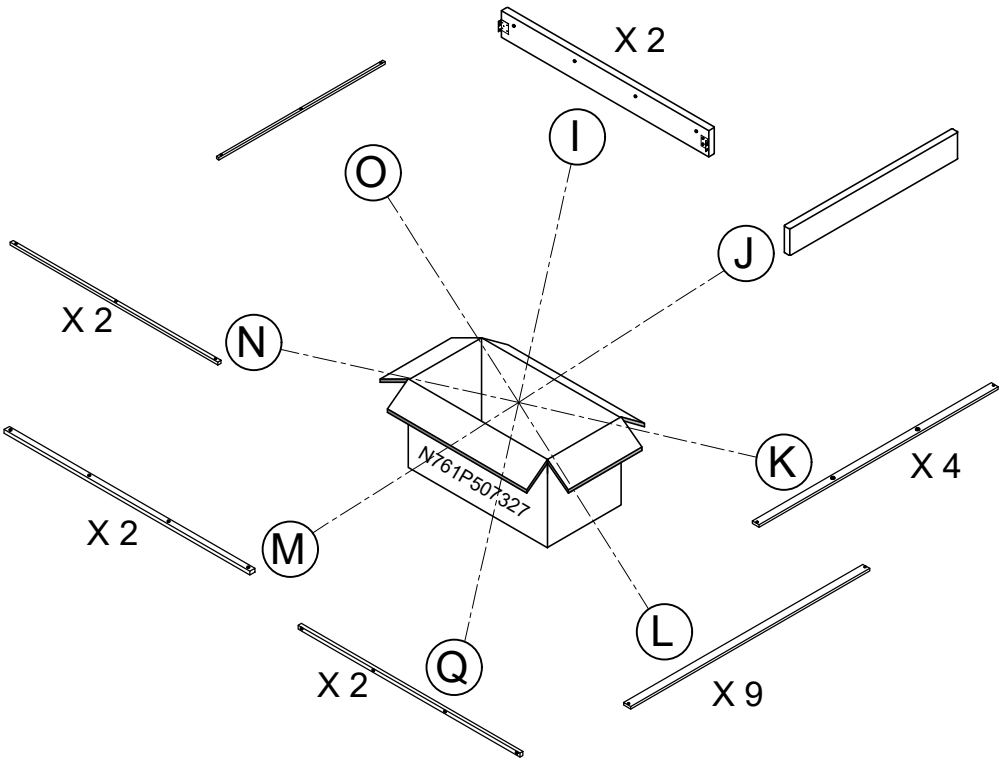

STEP 2: Attach the **Left Side Leg Frame (E)** and **Right Side Leg Frame (F)** to the **Left Headboard wing (C)** and **Right Headboard wing (D)** using **Bolts** (6) and **Flat Washers** (2), then tighten securely with an **Allen Wrench** (1).

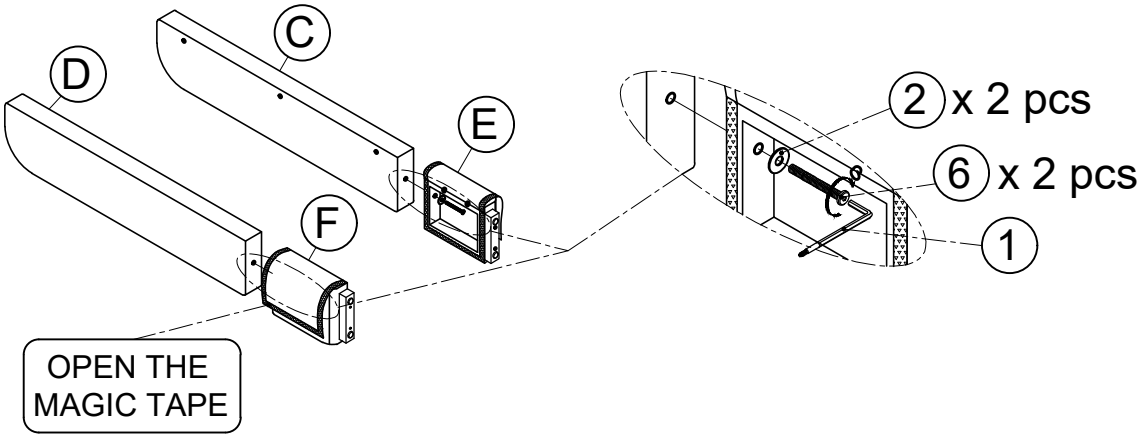

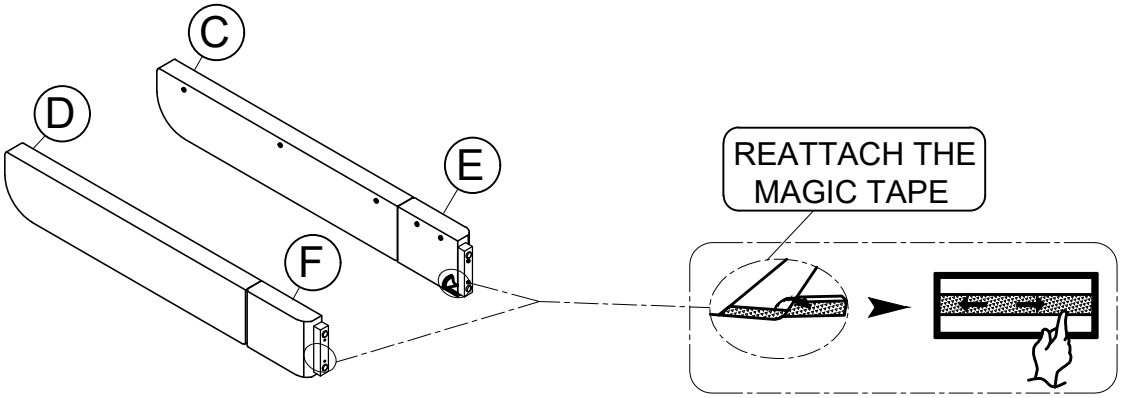

STEP 3: Attach the **Left Leg Frame (G)** and **Right Leg Frame (H)** to the **Left Side Leg Frame (E)** and **Right Side Leg Frame (F)** using **Bolts** (6) and **Flat Washers** (2), then tighten securely with an **Allen Wrench** (1).

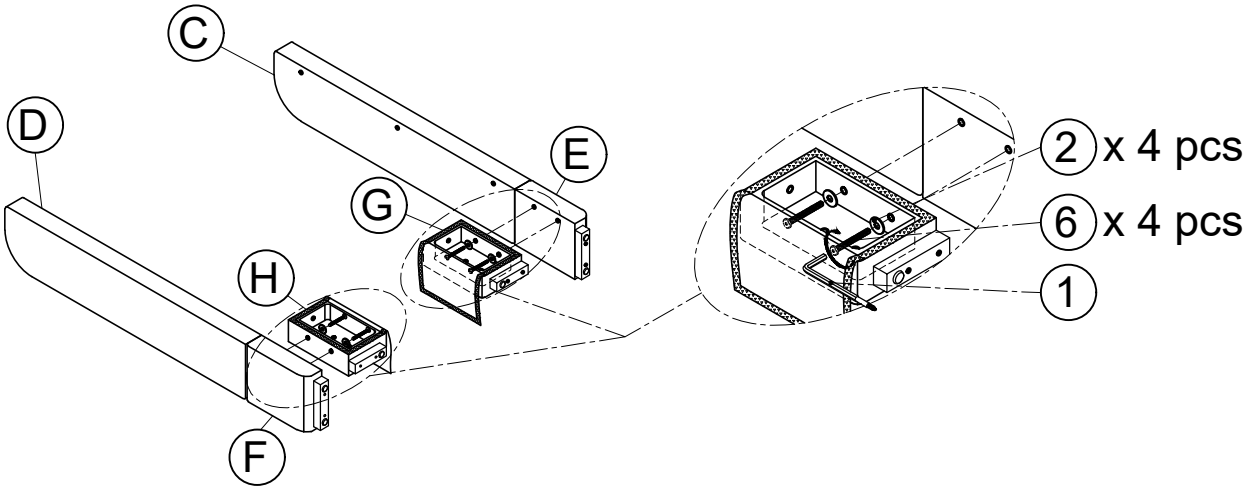

STEP 4: Attach the **Left Headboard (A)** to the **Left Leg Frame (G)** and **Left Headboard Wing (C) ,** and attach the **Right Headboard (B)** to the **Right Leg Frame (H)** and **Right Headboard Wing (D).** Then attach the **Left Headboard (A)** and **Right Headboard (B)** together using **Bolts** (4) , (6) and **Flat Washers** (2) , and tighten securely with an **Allen Wrench** (1) .

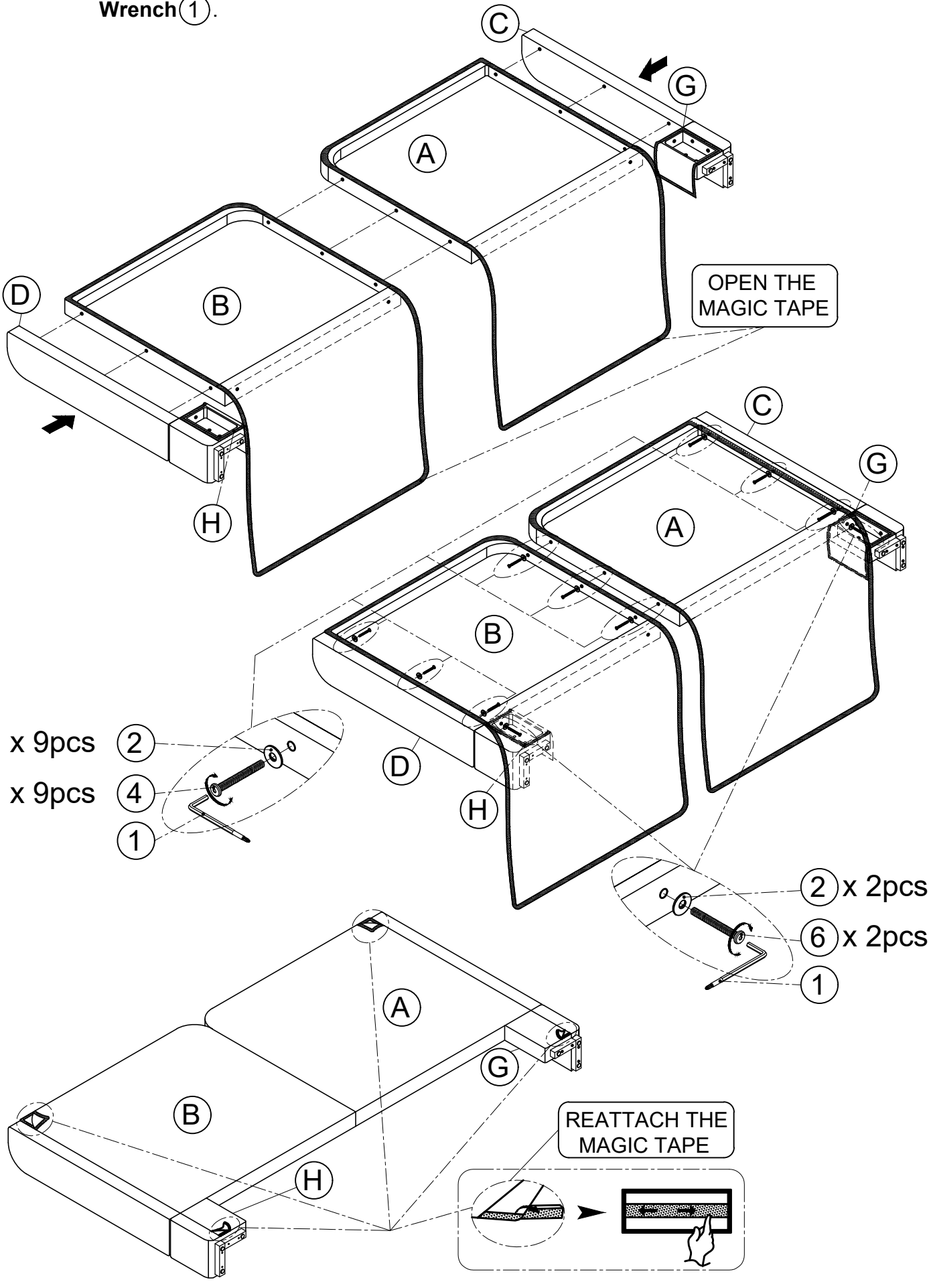

STEP 5: Attach the **Support Rails (Q)** to the **Bed Side Rails (I)** using **Bolts** (4) and **Flat Washers** (2), then tighten securely with an **Allen Wrench** (1).

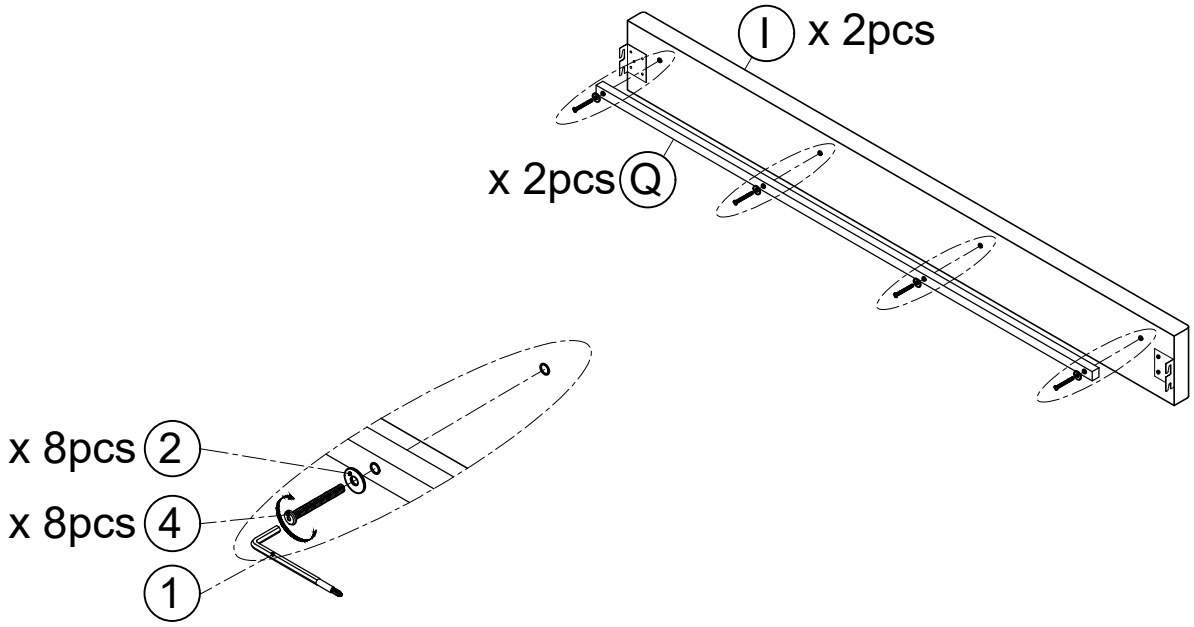

STEP 6: Attach the **Side Rail Legs (N)** and **Footboard Leg (O)** to the **Bed Side Rails (I)** and **Footboard (J)** using **Bolts** (6) and **Flat Washers** (2), then tighten securely with an **Allen Wrench** (1).

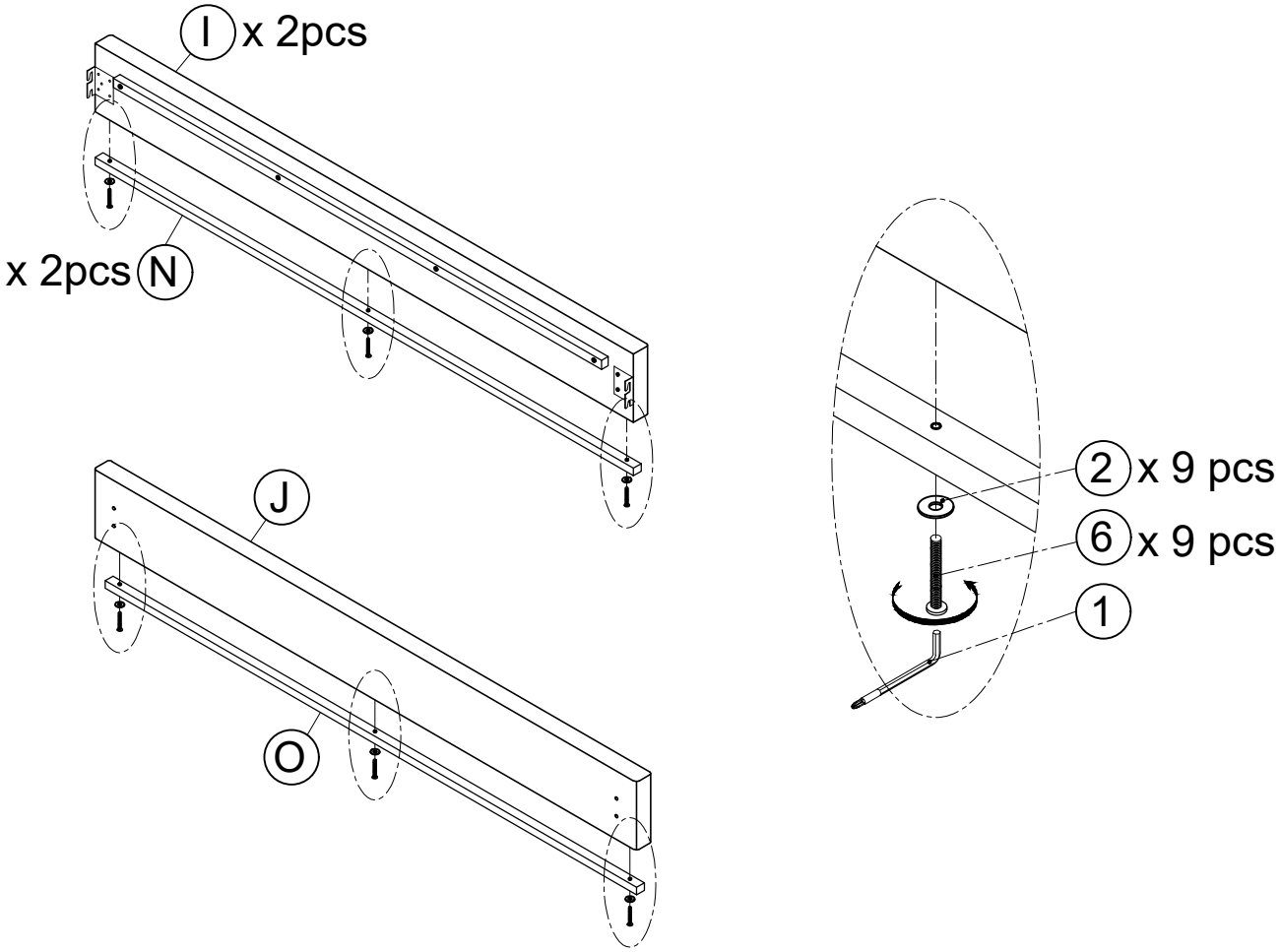

STEP 7: Attach the **Bed Side Rails (I)** to the **Leg Frames (G , H)** and **Footboard (J)** using **Bolts** (3) and **Flat Washers** (2) , then tighten securely with an **Allen Wrench** (1).

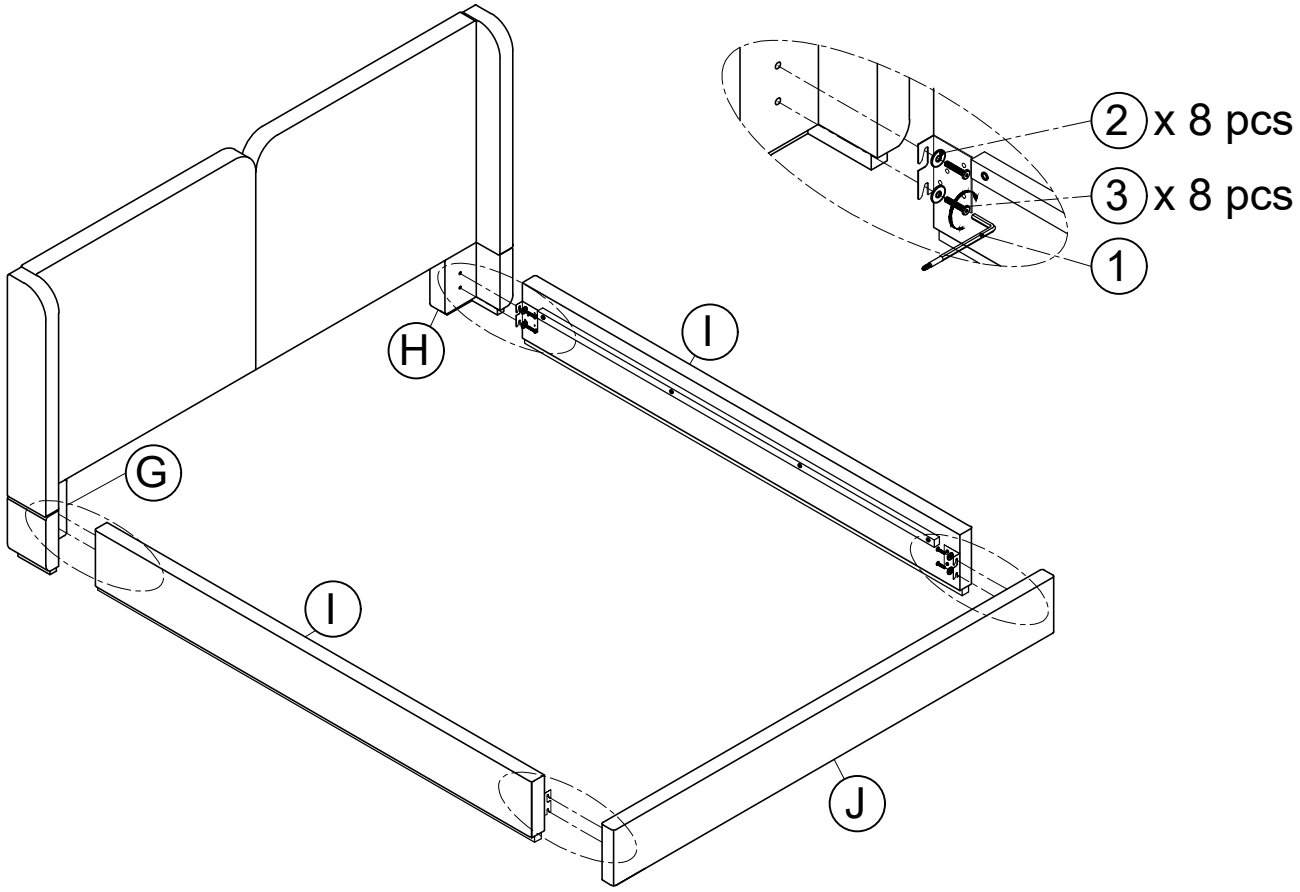

STEP 8: Attach the **Center Legs (P)** , **Center Support Rails (M)** and **Bed Slats**（**with center holes**）**(K)** together using **Bolts** (4) and **Flat Washers** (2) , then tighten securely with an **Allen Wrench** (1).

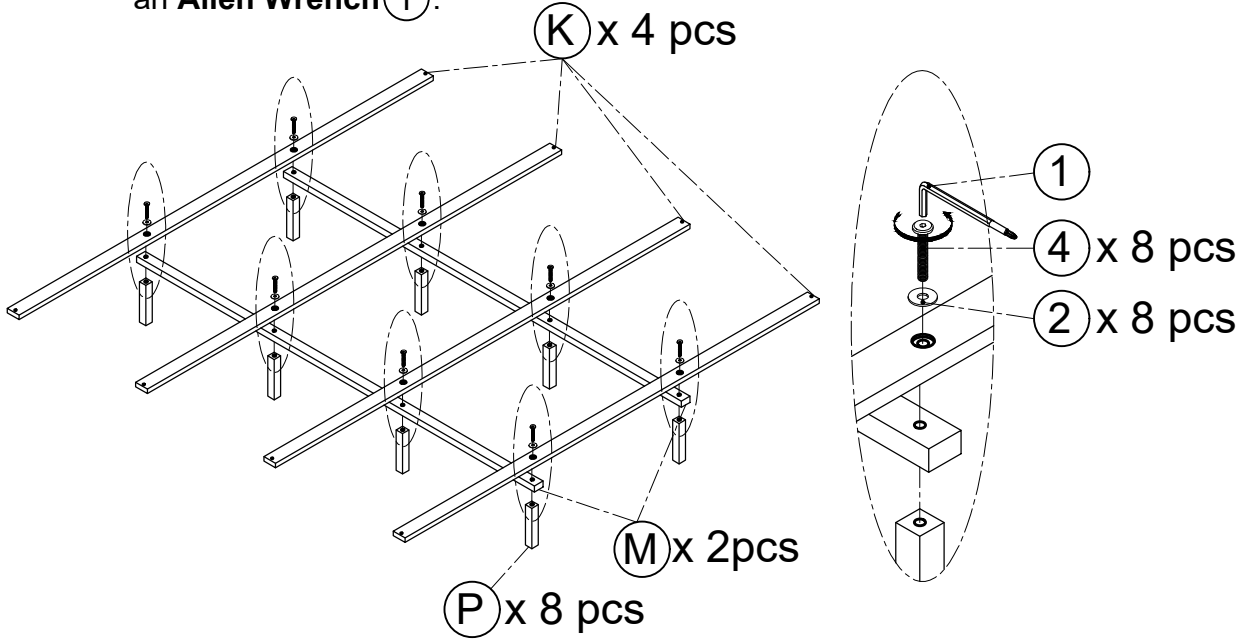

STEP 9: Place the **Bed Slats (K ,L)** into position , using **Screws** (5) then tighten securely with an **Allen Wrench** (1).

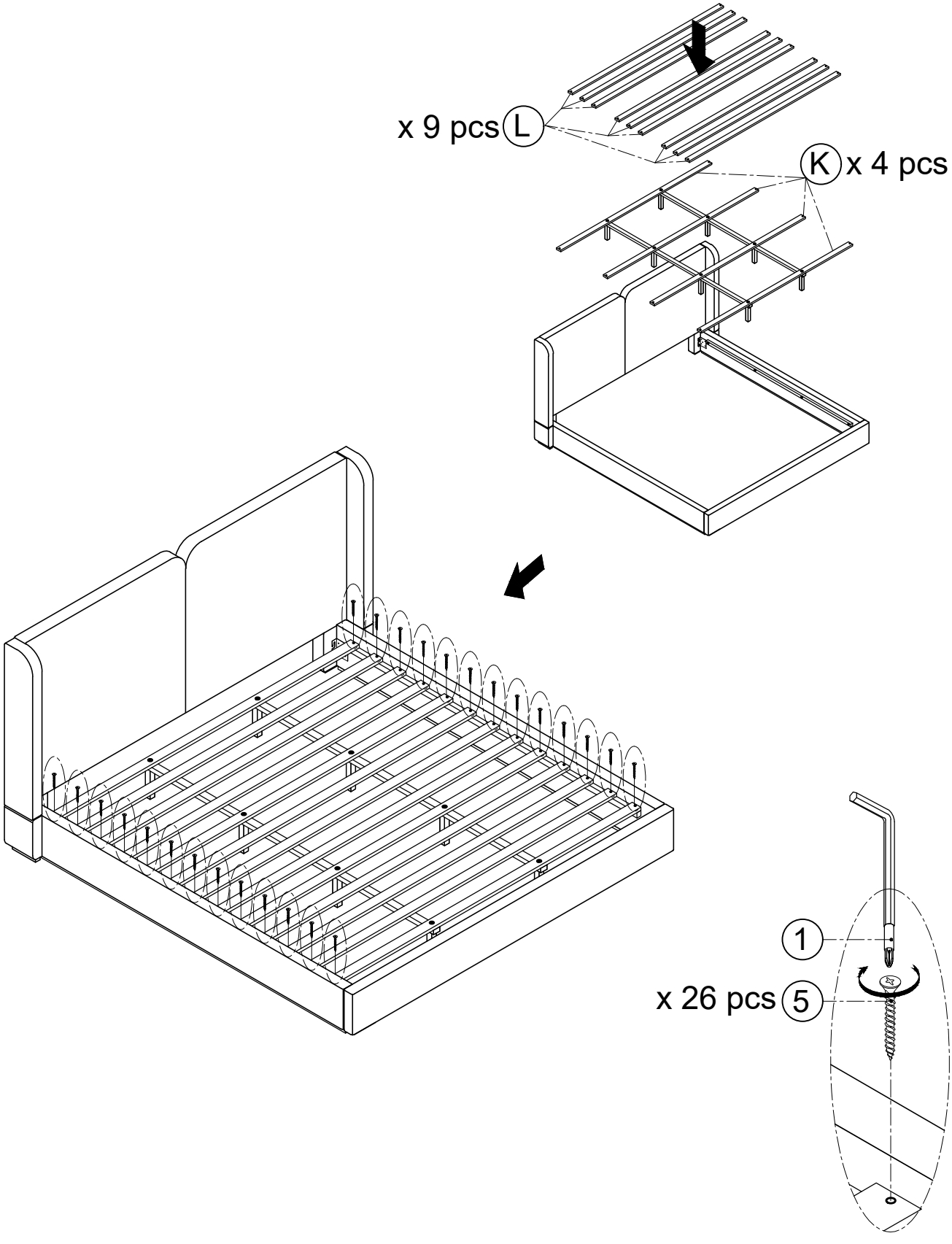

STEP 10: COMPLETE

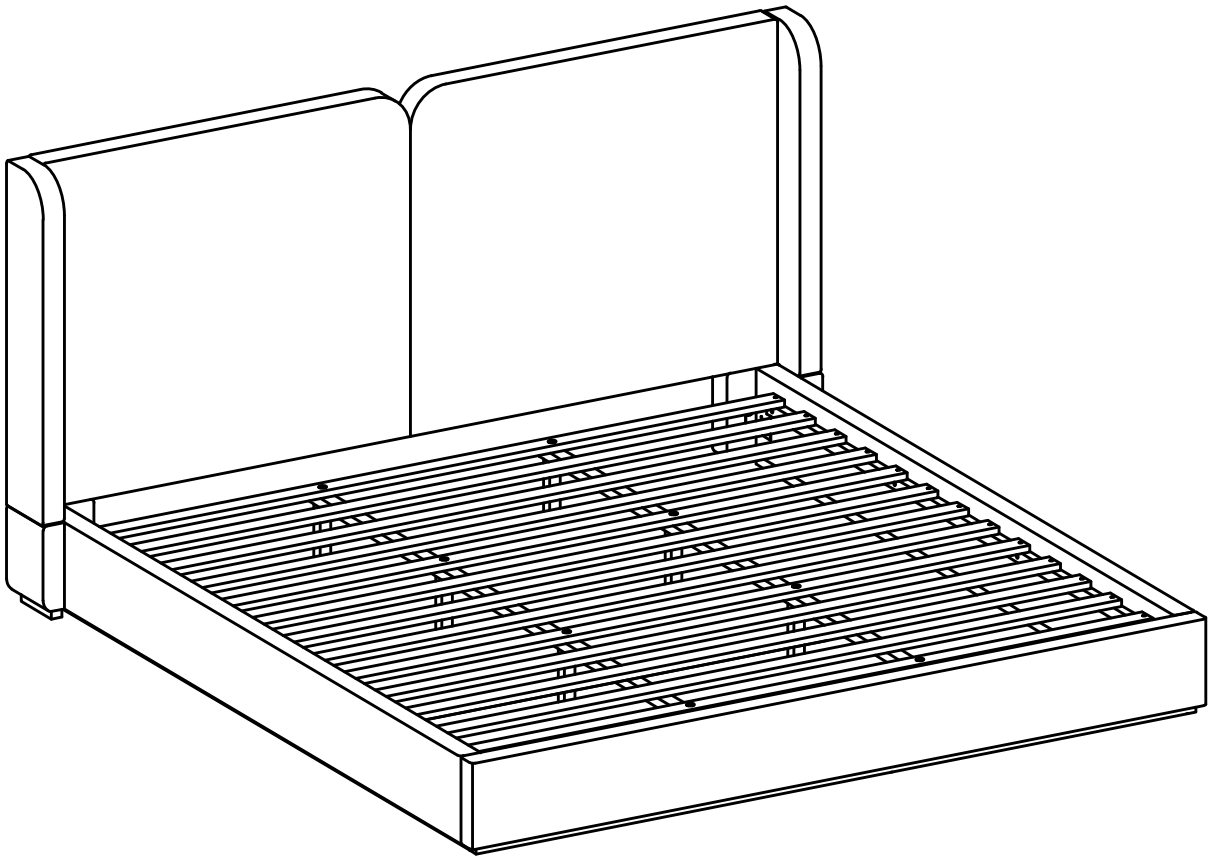

Questions & Answers about Proposition 65

- What is Proposition 65?

Proposition 65 requires businesses to provide warnings to Californians about significant exposures to chemicals that cause cancer, birth defects or other reproductive harm. These chemicals can be in the products that Californians purchase, in their homes or workplaces, or that are released into the environment. By requiring that this information be provided, Proposition 65 enables Californians to make informed decisions about their exposures to these chemicals.

Proposition 65 also prohibits California businesses from knowingly discharging significant amounts of listed chemicals into sources of drinking water.

Proposition 65 requires California to publish a list of chemicals known to cause cancer, birth defects or other reproductive harm. This list, which must be updated at least once a year, has grown to include approximately 900 chemicals since it was first published in 1987.

- What types of chemicals are on the Proposition 65 list?

The list contains a wide range of naturally occurring and synthetic chemicals that include additives or ingredients in pesticides, common household products, food, drugs, dyes, or solvents. Listed chemicals may also be used in manufacturing and construction, or they may be byproducts of chemical processes, such as motor vehicle exhaust.

- What does a warning mean?

If a warning is placed on a product label or posted or distributed at a workplace, a business, or in rental housing, the business issuing the warning is aware or believes that it is exposing individuals to one or more listed chemicals.

By law, a warning must be given for listed chemicals unless the exposure is low enough to pose no significant risk of cancer or is significantly below levels observed to cause birth defects or other reproductive harm.

- Where can I get more information on Proposition 65?

If you have specific questions on the administration or implementation of Proposition 65, you can contact OEHHA's Proposition 65 program at P65.Questions@oehha.ca.gov, or by phone at (916) 445-6900.