ITEM #5127878, 5127879, 5190472

CRESTWELL CEILING FAN

MODEL #42852, 42853, 42854

Español p. 19

HARBOR BREEZE and logo design are trademarks or registered trademarks of LF, LLC. All rights reserved.

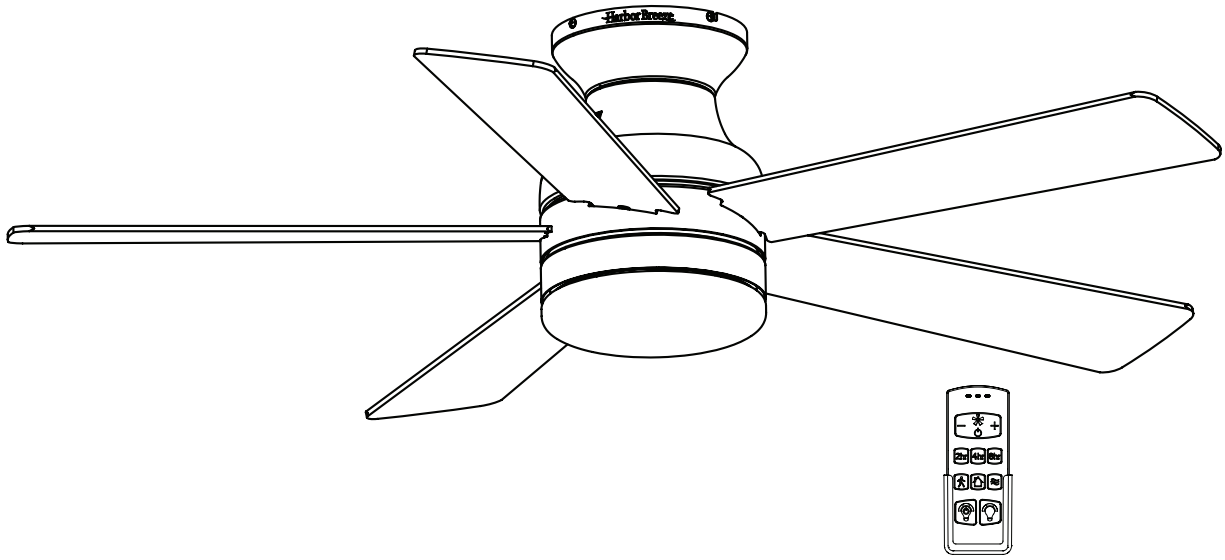

ATTACH YOUR RECEIPT HERE

Purchase Date _____

Questions, problems, missing parts? Before returning to your retailer, call our customer service department at 888-251-1003, 8 a.m. - 8 p.m., EST, Monday - Sunday. You could also contact us at partsplus@lowes.com.

AS22482

TABLE OF CONTENTS

Package Contents 3

Hardware Contents 4

Safety Information 5

Preparation 6

Initial Installation 7

Wiring 9

Final Installation. 10

Operating Instructions 13

Care and Maintenance 15

Troubleshooting. 15

Limited Lifetime Warranty 17

Replacement Parts List 18

PACKAGE CONTENTS

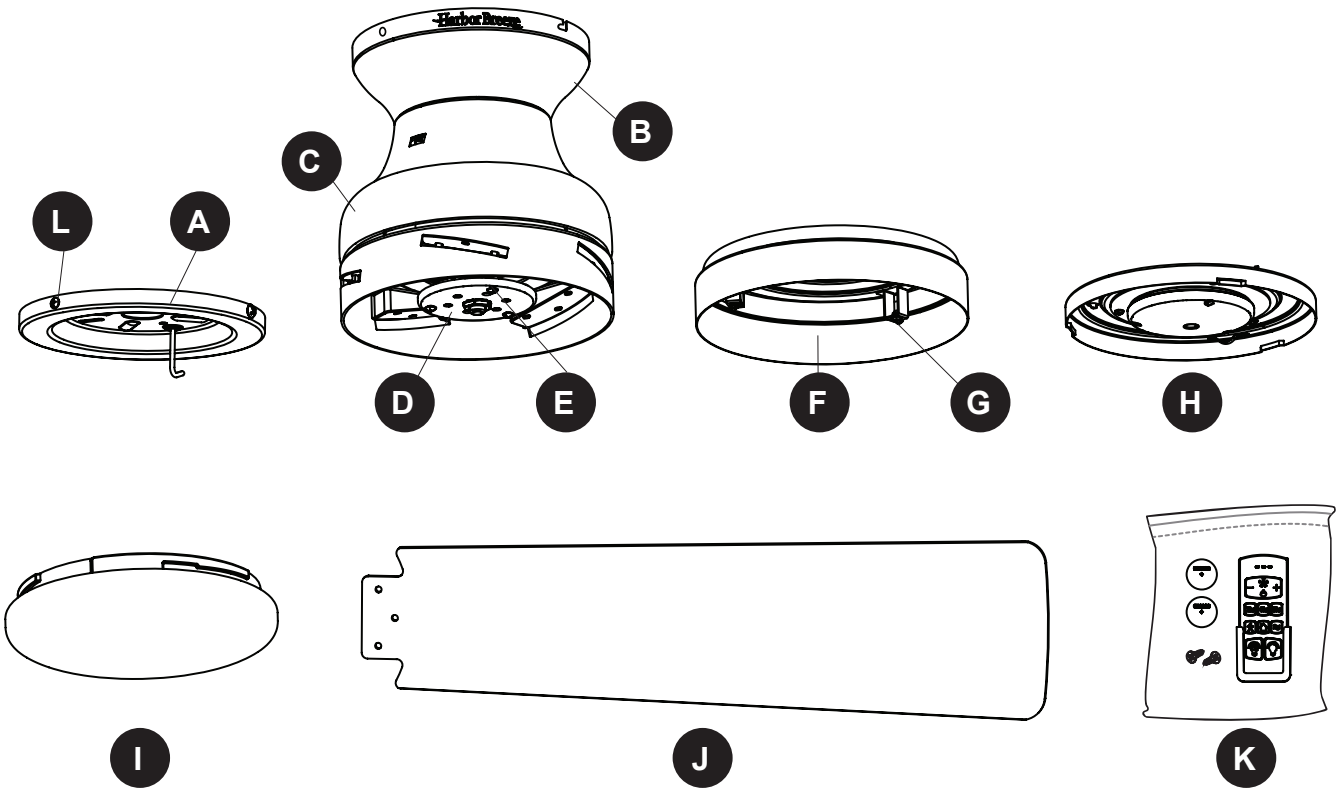

PART	DESCRIPTION	QUANTITY
A	Mounting Bracket	1
B	Canopy (preassembled to Motor Assembly [C])	1
C	Motor Assembly	1
D	Fitter Plate (preassembled to Motor Assembly [C])	1
E	Fitter Plate Screw (preassembled to Fitter Plate [D])	3
F	Light Pan	1
G	Light Pan Screw (preassembled to Light Pan [F])	3
H	Light Kit	1
I	Glass Bowl	1
J	Blade	3
K	Remote Pack	1
L	Mounting Bracket Scew (preassembled to Mounting Bracket [A])	4

HARDWARE CONTENTS (shown actual size)

AA

Wire Connector
Qty. 3
+ 1 extra

BB

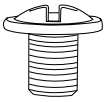

Blade Screw
Qty. 15
+ 1 extra

CC

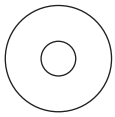

Blade Washer
Qty. 15
+ 1 extra

SAFETY INFORMATION

Please read and understand this entire manual before attempting to assemble, operate or install the product.

- Before you begin installing the fan, disconnect the power by removing fuses or turning off the circuit breakers.
- Make sure all electrical connections comply with local codes, ordinances, the National Electrical Code and ANSI/NFPA 70-199. Hire a qualified electrician or consult a do-it-yourself wiring handbook if you are unfamiliar with installing electrical wiring.
- Make sure the installation site you choose allows a minimum clearance of 7 ft. from the blades to the floor and at least 30 in. from the end of the blades to any obstruction.
- The net weight of this fan is: 16.34 lb (7,41 kg).

DANGER: When using an existing outlet box, make sure the outlet box is securely attached to the building structure and can support the full weight of the fan. Failure to do this can result in serious injury or death. The stability of the outlet box is essential in minimizing wobble and noise in the fan after installation is complete.

WARNING: To avoid personal injury, the use of gloves may be necessary while handling fan parts with sharp edges.

WARNING: Using a full-range dimmer switch to control fan speed will cause a loud humming noise from the fan. To reduce the risk of fire or electric shock, do NOT use a full-range dimmer switch to control the fan speed.

WARNING: To reduce the risk of fire, electric shock or personal injury, mount the fan to an outlet box marked “ACCEPTABLE FOR FAN SUPPORT” and use the mounting screws provided with the outlet box. Most outlet boxes commonly used for the support of lighting fixtures are not acceptable for fan support and may need to be replaced. Consult a qualified electrician if in doubt. Secure the outlet box directly to the building structure. The outlet box and its support must be able to support the moving weight of the fan (at least 35 lbs.).

WARNING: To reduce the risk of fire, electrical shock or personal injury, wire connectors provided with this fan are designed to accept only one 12-gauge house wire and two lead wires from the fan. If your house wire is larger than 12-gauge and there is more than one house wire to connect to the two fan lead wires, consult an electrician for the proper size wire connectors to use.

WARNING: To reduce the risk of fire, electric shock or personal injury, do not bend the blade arms when installing them, balancing the blades or cleaning the fan. Do not insert objects between the rotating fan blades.

WARNING: To reduce the risk of personal injury, use only parts provided with this fan. The use of parts OTHER than those provided with this fan will void the warranty.

SAFETY INFORMATION

CAUTION: Be sure the outlet box is properly grounded or that a ground (green or bare) wire is present.

CAUTION: Carefully check all screws, bolts and nuts on the fan motor assembly to ensure they are secured.

CAUTION: This device complies with part 15 of FCC Rules. Operation is subject to the following two conditions: 1) This device may cause harmful interference, and 2) this device must accept any interference received, including interference that may cause undesired operation.

CAUTION: This equipment has been tested and found to comply with the limits for a Class B digital device, pursuant to Part 15 of the FCC Rules. These limits are designed to provide reasonable protection against harmful interference in a residential installation. This equipment generates, uses and can radiate radio frequency energy and, if not installed and used in accordance with the instructions, may cause harmful interference to radio communications. However, there is no guarantee that interference will not occur in a particular installation. If this equipment does cause harmful interference to radio or television reception, which can be determined by turning the equipment off and on, the user is encouraged to try to correct the interference by one or more of the following measures:

--Reorient or relocate the receiving antenna.

--Increase the separation between the equipment and receiver.

--Connect the equipment into an outlet on a circuit different from that to which the receiver is connected.

--Consult the dealer or an experienced radio/TV technician for help.

Please note changes or modifications not expressly approved by the party responsible for compliance could void the user's authority to operate the equipment.

HKC-US
3350 Players Club Parkway, Suite 225
Memphis, TN 38125
1-888-251-1003

PREPARATION

Before beginning the assembly of this product, ensure that all parts are present. Compare all parts with the package contents list and hardware contents list. If any part is missing or damaged, do not attempt to assemble the product.

Estimated Assembly Time: 120 minutes

Tools Required for Assembly (not included): Electrical Tape, Phillips Screwdriver, Pliers, Safety Glasses, Step Ladder, Wire Cutters and Wire Strippers

Helpful Tools (not included): AC Tester Light, Tape Measure and Wiring Handbook

INITIAL INSTALLATION

1. Turn off the circuit breakers and the wall switch to the fan supply line leads.

   ⚠ **DANGER:** Failure to disconnect the power supply prior to installation may result in serious injury or death.

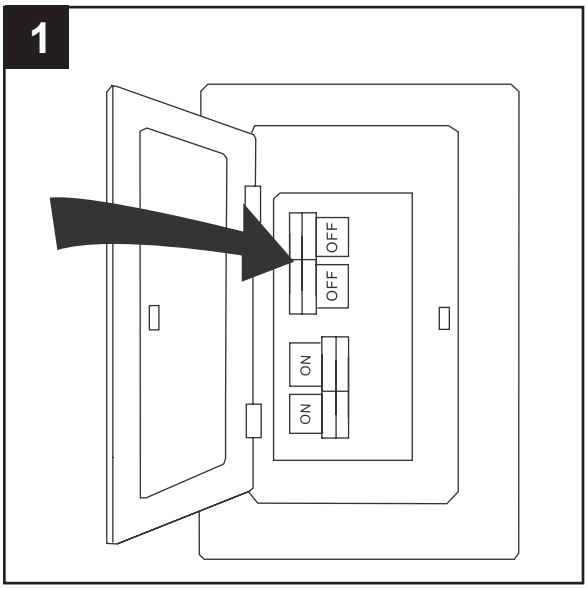

2. This fan is intended for Flushmount Installation. Standard Mounting, Angle Mounting, and Closemount installations are not available.

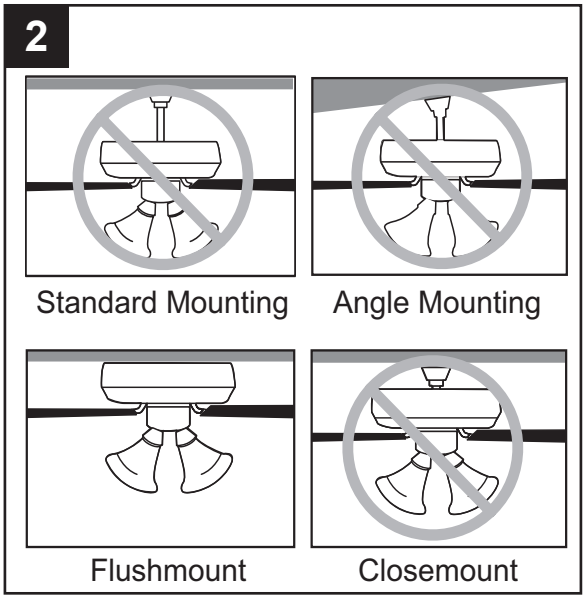

3. Ensure the blades (J) will be at least 30 in. from any obstructions and will be at least 7 ft. above the floor.

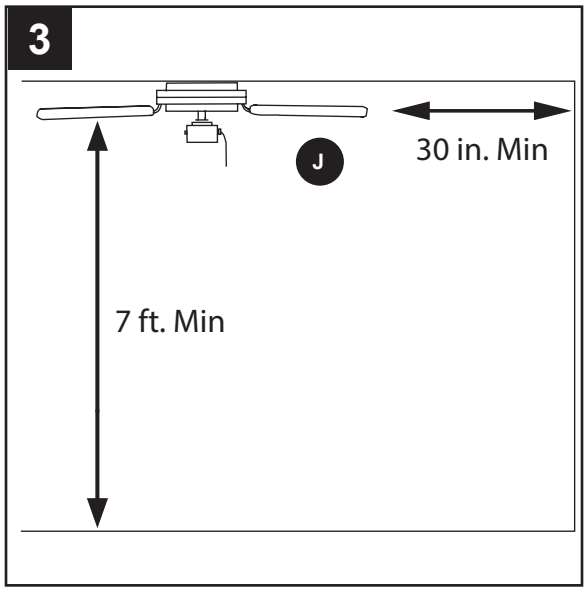

4. Loosen all four mounting bracket screws (L), then completely remove two mounting bracket screws (L). Set them aside for later use.

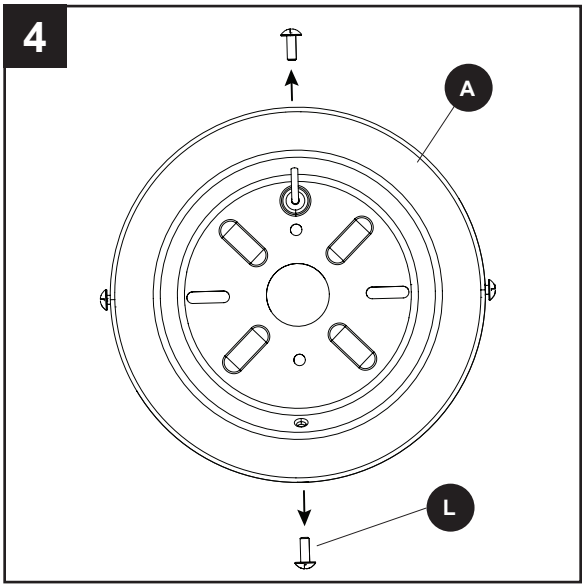

5. Feed the supply wires from the outlet box through the center hole in the mounting bracket (A). Then, secure the mounting bracket (A) to the outlet box (not included) using screws and washers provided with the outlet box.

   CAUTION: It is very important you use the proper hardware when installing the mounting bracket (A) as it will support the fan.

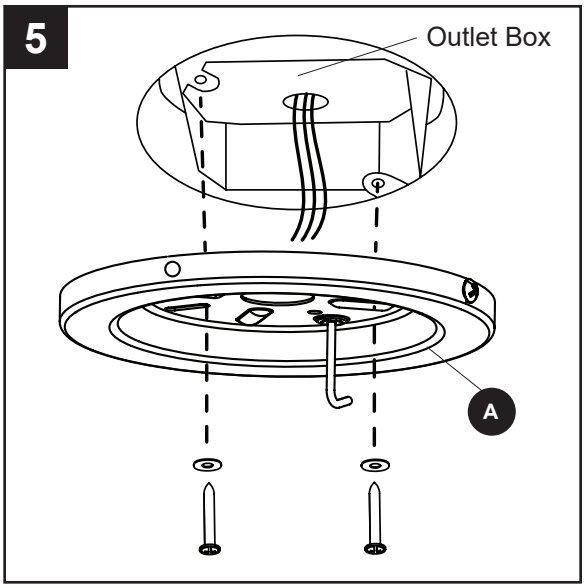

6. Raise the fan and place the canopy (B) on the hook on the mounting bracket (A), temporarily leaving hands free for the wiring process.

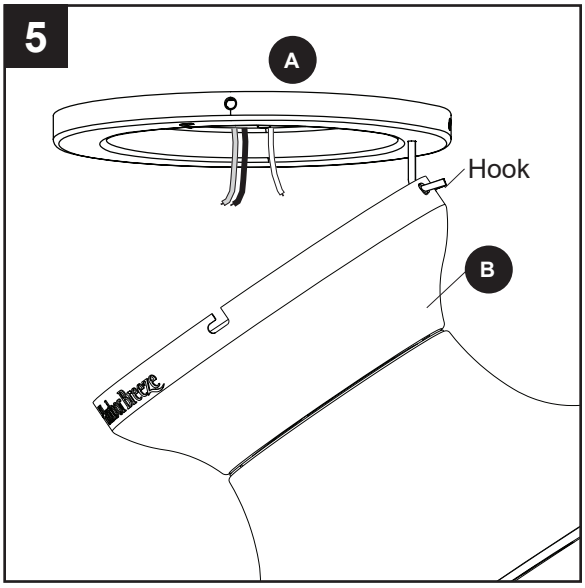

WIRING

⚠ **WARNING:** To reduce the risk of fire, electrical shock or personal injury, wire connectors provided with this fan are designed to accept only one 12-gauge house wire and two lead wires from the fan. If your house wire is larger than 12-gauge and/or there is more than one house wire to connect to the two fan lead wires, consult an electrician for the proper size wire connectors to use.
CAUTION: Be sure the outlet box is properly grounded or that a ground (green or bare) wire is present.

1. Connect supply and fan wires according to the diagram and these steps:
   - Connect the Green wire from the mounting bracket (A) to the Bare/Green (ground) supply wire.
   - Connect the White wire from the fan to the White (neutral) supply wire.
   - Connect the Black wire from the fan to the Black (hot) supply wire.

   Note: The Black wire is hot power for the fan. The White wire is neutral for the fan and light kit. The Green wire is the ground wire. If supply wires are different colors than referred to above, a professional electrician should determine the proper wiring.

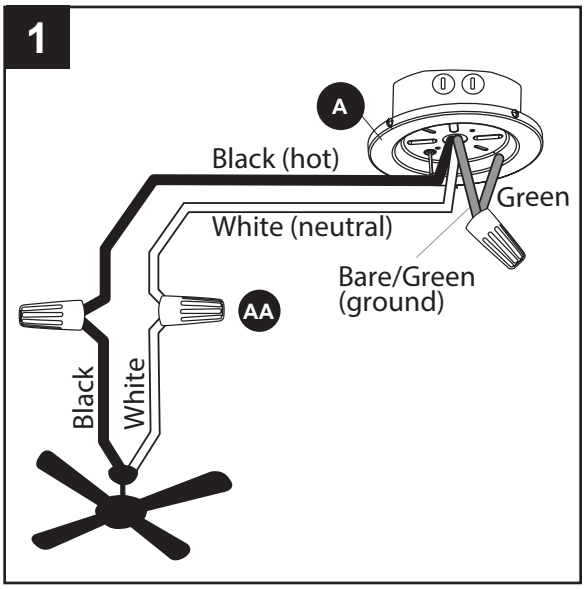

Hardware Used

AA Wire Connector x 3

2. Wrap electrical tape (not included) around the wire connector (AA) down to the wire.

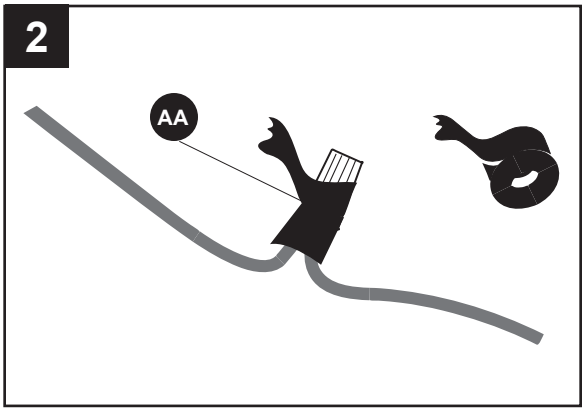

3. Turn the spliced/taped wires upward and gently push the wires and wire connector (AA) into the outlet box.

   ⚠ **WARNING:** Ensure no wire strands are visible after making connections. Place the Green and White wire connections on the opposite side of the outlet box from the Black.

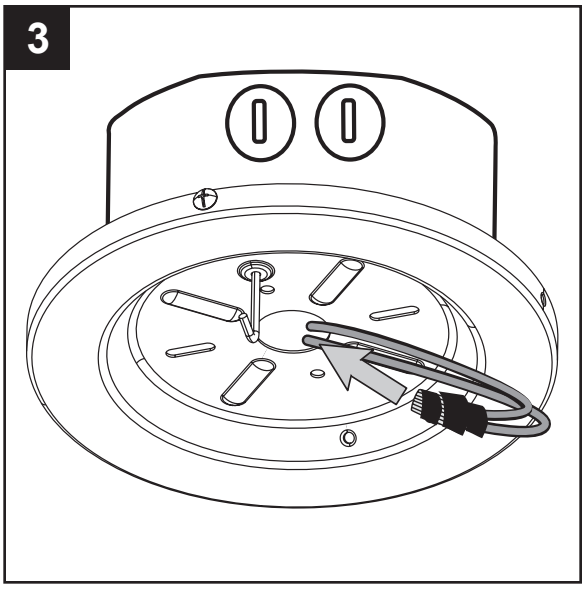

FINAL INSTALLATION

1. Slide the canopy (B) over the mounting bracket (A), aligning the slotted holes in the canopy (B) with the previously loosened mounting bracket screws (L) in the mounting bracket (A). Twist the canopy (B) clockwise to lock. Then re-insert the mounting bracket screws (L) (Step 4, page 8) and securely tighten all screws.

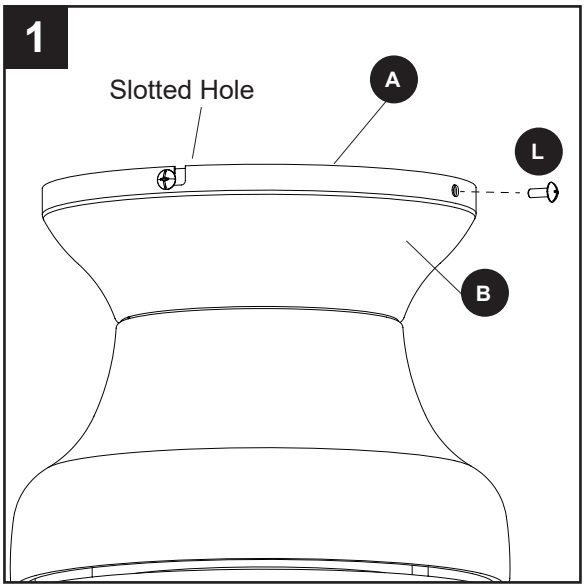

2. Insert blade (J) through slot in the side of the motor assembly (C). Align the holes of one blade (J) with three blade screw holes in underside of the motor assembly (C). Secure blade (J) with three blade screws (BB) and blade washers (CC).

Hardware Used

BB	Blade Screw	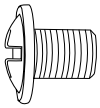	x 15
CC	Blade Washer	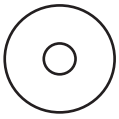	x 15

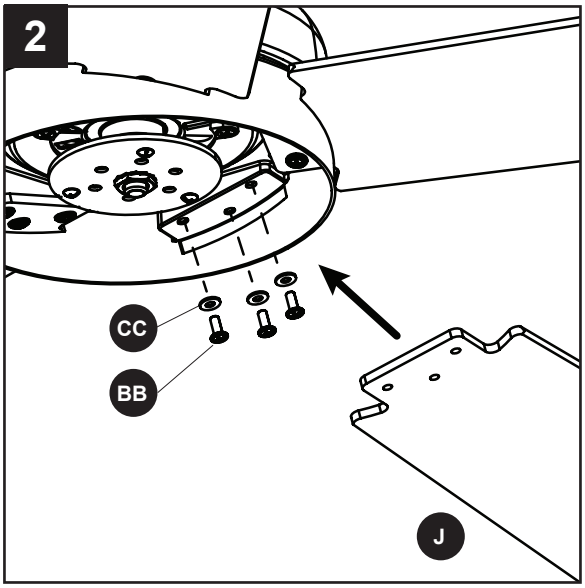

3. Remove one and loosen the other two fitter plate screws (E) but do not remove from fitter plate (D). Feed the single-pin connector through center hole in light pan (F). Align the two key slots in the light pan (F) with the loosened fitter plate screws (E). Place the light pan (F) over the two screws and turn the light pan (F) clockwise. Then tighten the two fitter plate screws (E). Re-install the previously removed fitter plate screw (E) and tighten firmly.

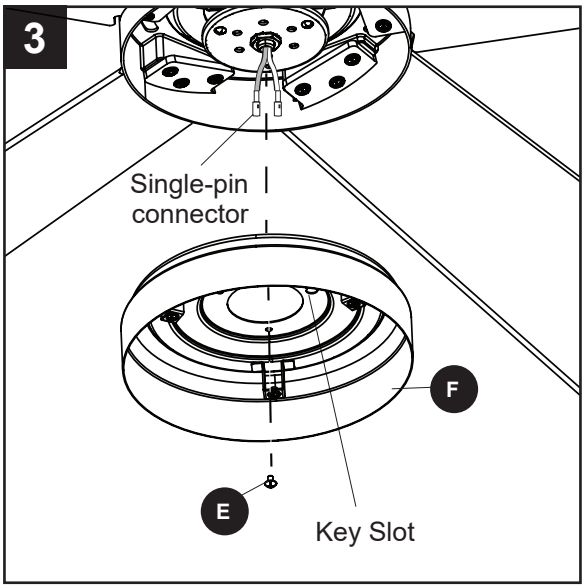

FINAL INSTALLATION

4. Remove one and loosen the other two light pan screws (G) from the underside of the light pan (F).Connect the single-pin connector from the fitter plate (D) to the single-pin connector from the light kit (H) --blue to black and white to white. Align the keyhole slots in the light kit (H) with the loosened screws in the light pan (G). Turn light kit (H) clockwise and replace the previously removed light pan screw (G). Tighten all screws.

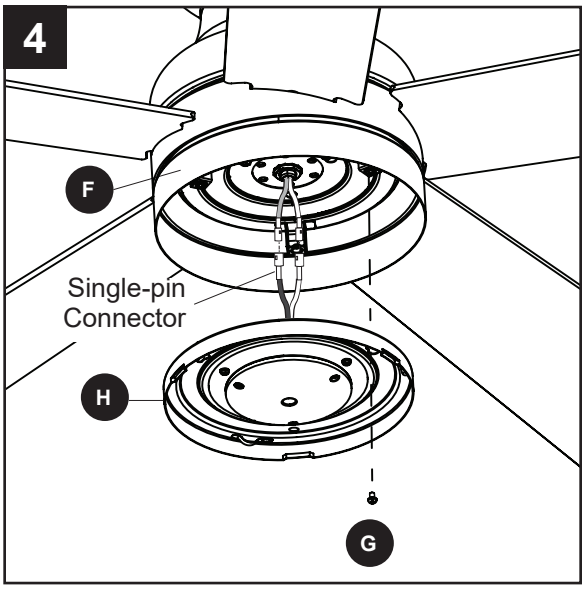

5. Lift the glass bowl (I) into the light kit (H) and turn in a clockwise direction until it is secure. **CAUTION:** Avoid cross-threading the glass during installation. Improper installation could cause the glass bowl (I) to be difficult to remove or fall, which could cause serious injury.

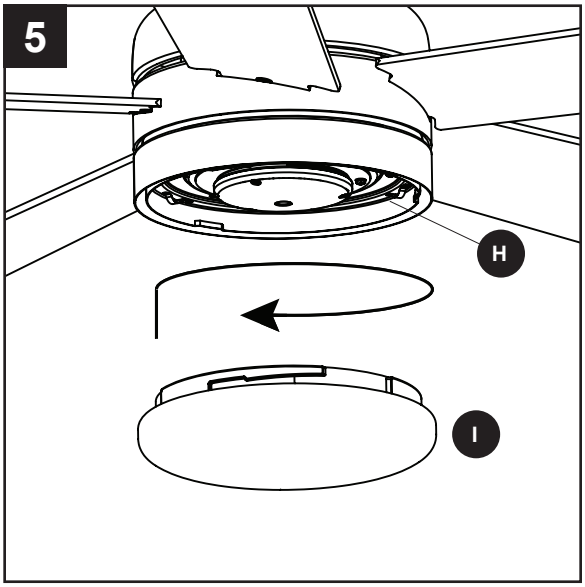

6. Remote control (K) comes equipped with a wall bracket. If you wish to install the wall bracket, remove the small plate to expose the screw holes. Insert wall brackets screws through holes and into wall, then cover with the previously removed small plate. The remote from remote pack (K) can be stored in the mounting bracket for easy access.

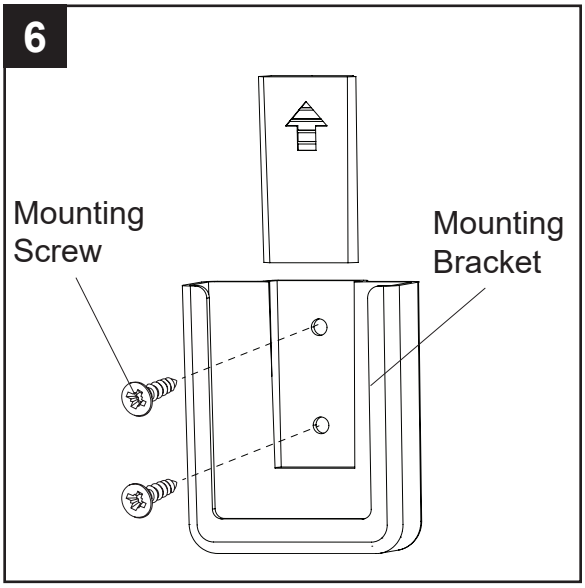

7. Remove the battery cover from the back of the remote found in remote pack (K). Insert the battery from remote pack (K) into the remote; ensuring the polarity of the battery matches the polarity indicated in the battery compartment -- positive (+) to positive (+) and negative (-) to negative (-). Replace the battery cover and press the fan power button on the remote to ensure the LED indicator illuminates and the remote turns on the fan.

   Note: If remote doesn't turn on the fan, see TROUBLESHOOTING (page 16).

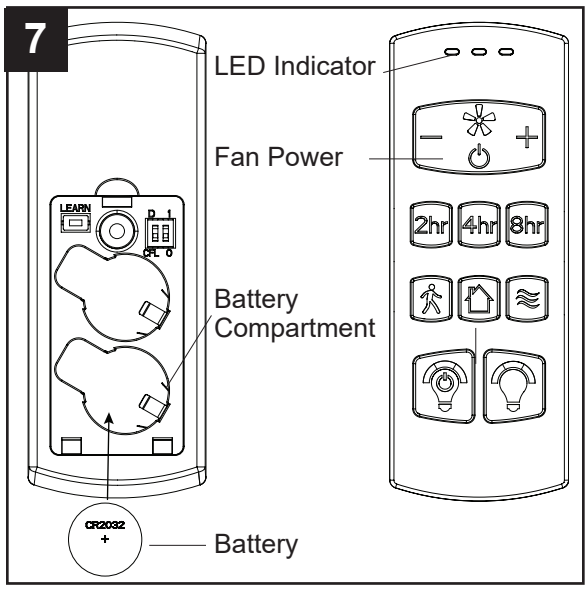

8. Turn on the circuit breakers and the wall switch to the fan supply line leads.

   Assembly is complete.

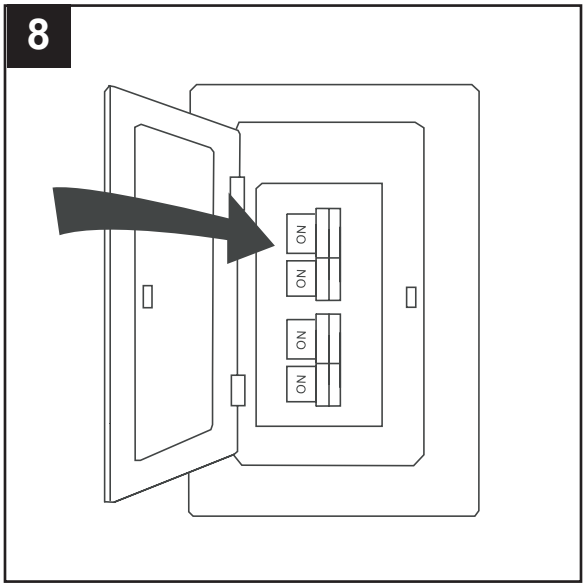

OPERATING INSTRUCTIONS

1. To operate the fan using remote control, press and release the following buttons:

   LED Indicator should illuminate when any remote button is pressed. If not, replace the DC3V, CR2032 batteries.

   Fan Power has four options:

   (✻) - Turns on fan at previously selected speed.

   (+) - Increase fan speed

   (–) - Lower fan speed

   (⏻) - Turns the fan off.

   Sleep Timers - Turn off fan after 2 hours (2hr), 4 hours (4hr), or 8 hours (8hr). Light dims to confirm function is active. Press Fan Off (⏻)to deactivate.

   Light Delay - Delays turning off light for one minute which allows safe exit from room. Light dims to confirm function is active. Press Light Control button to deactivate and turn the light off.

   Home Shield™ - Simulates occupancy while away from home. Fan remains off and the light randomly turns on for a minimum of five times and a maximum of 20 minutes. The light remains off for 60 minutes between events. Press and hold button to activate. Light will blink twice to confirm Home Shield is active. Press any button to cancel.

   Variable Breeze - Simulates a natural breeze, as if you were outside.

   Light Control - Tap button to turn the light off and on. Press and hold button to dim or brighten the lights.

   Light Color - Tap to cycle through the color temperatures from 2200K (warm white) to 6500K (daylight).

2. **LEARN** - Syncs remote control (K) to receiver (see troubleshooting for instructions).

   D/CFL Switch - Switch should be set to “D” to correspond with dimmable bulbs (included). Flip to “CFL” if you change to nondimmable bulbs, which will disable the dimming function.

   0/1 Switch - Changes signal frequency if there is interference from another remote (see troubleshooting for instructions).

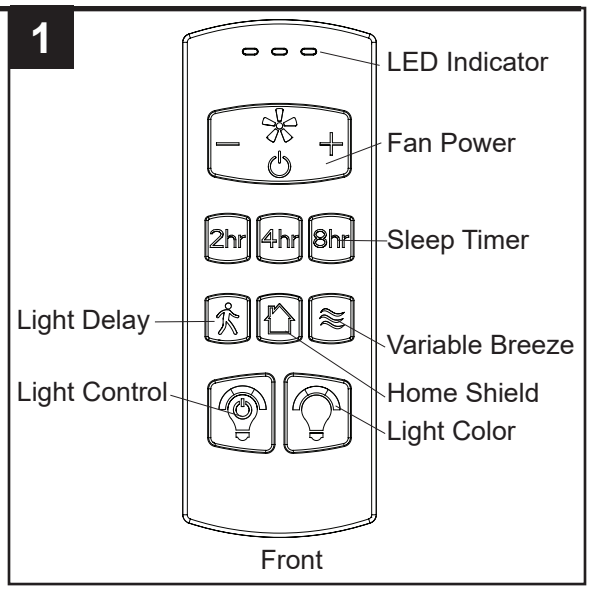

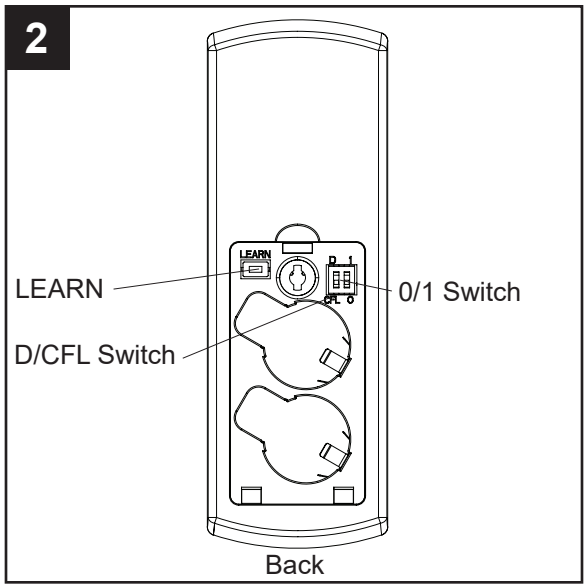

3. Using a ceiling fan will allow you to raise your thermostat setting in summer and lower your thermostat setting in winter without feeling a difference in your comfort.

   In warmer weather, push the reverse switch left to display a sun icon, which will result in downward airflow creating a wind chill effect (Fig. 3A).

   In cooler weather, push the reverse switch right to display a snowflake icon, which will result in upward airflow that can help move hot air off the ceiling area (Fig. 3B).

   Important: Wait for the fan to stop before moving the reverse switch. The reverse switch must be set either completely left or right in order for the fan to function correctly. If the reverse switch is set in the middle position, the fan will not operate (Fig. 3C).

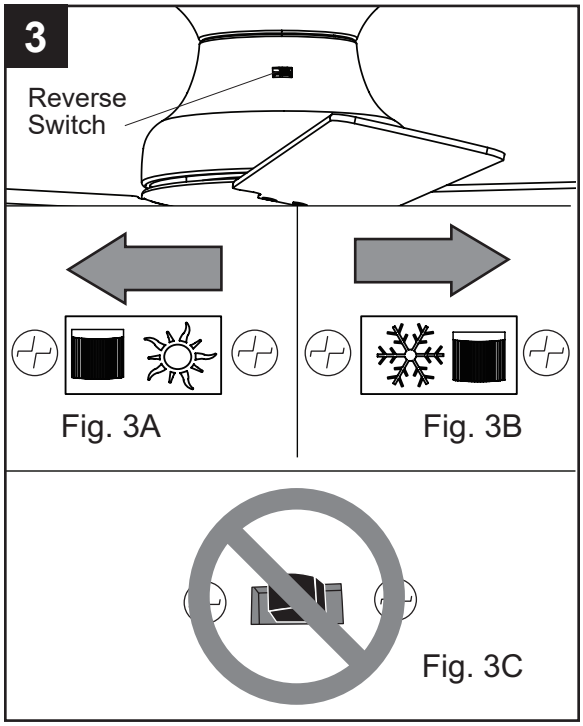

CARE AND MAINTENANCE

At least twice each year, tighten all screws on the fan. Clean the motor housing with only a soft brush or lint-free cloth to avoid scratching the finish. Clean the blades with a lint-free cloth.

Total fixture wattage is 23 watts; do not attempt to replace LED.

Battery Replacement: Use CR2032 lithium batteries. Exhausted batteries should be removed from remote. Non-rechargeable batteries should not be recharged. Do not dispose of batteries in fire, as they may explode or leak.

Important: Shut off the main power supply before you begin any maintenance tasks. Do not use water or a damp cloth to clean the ceiling fan.

TROUBLESHOOTING

PROBLEM	POSSIBLE CAUSE	CORRECTIVE ACTION
The fan does not move.	1. The power is off or the fuse is blown. 2. There is a faulty wire connection. 3. The plugs are not connected properly. 4. The reverse switch is not completely engaged.	1. Turn the power on or check the fuse. 2. Turn the power off. Loosen the canopy and check all connections. 3. Check that the connectors from the light kit and fan are connected properly. 4. Push the reverse switch completely to the left or right.
There is excessive wobbling.	1. The blades and/or blade arms are loose. 2. The blades are unbalanced. 3. The fan mounting is not secure.	1. Check and tighten all screws that hold the fan blades to the blade arms and the blade arms to the motor. 2. Switch one blade with a blade from the opposite side. Or balance the fan using a blade balancing kit (sold separately). 3. Turn off the power. Loosen the motor housing and verify the upper mounting bracket is secure to the electrical outlet box. The bracket must be flush without movement against the outlet box.
The fan operates correctly, but the lights are not working.	1. The light kit wire plugs are not connected properly. 2. There is a faulty wire connection.	1. Ensure that the male and female plugs in the light kit fitter are connected properly. 2. Turn the power off and check all connections at the ceiling outlet box.

TROUBLESHOOTING

PROBLEM	POSSIBLE CAUSE	CORRECTIVE ACTION
The fan is noisy.	1. The blades are loose.	1. Check and tighten all screws that hold the fan blades to the blade arms and the motor.
	2. There is a cracked blade.	2. Replace the cracked blade.
	3. A wall control is not compatible with the fan.	3. Do not connect fan to wall control.
	4. The outlet box is not secure.	4. Ensure the ceiling outlet box is secured to the building structure.
	5. The mounting bracket is not secure.	5. Ensure the mounting bracket is secured to the outlet box and that the screws are tight.
Remote control does not work.	1. Power surge may have cleared memory and remote needs to be re-synced to the receiver.	1. Turn off the power at the breaker box for at least 10 seconds and then turn the power back on. Within 30 seconds, press and hold the “LEARN” button on the back of the remote for 3 seconds. The fan will turn on at low speed and light will blink once, signaling a successful synchronization.
	2. Battery in remote control needs to be replaced.	2. Insert new CR2032 batteries in battery compartment of the remote control (see page 12).
	3. Interference from another remote.	3. If there are several fans in proximity, turn power off to other fans and re-sync the remote (see Corrective Action 1 above). Or change DIP switch in battery compartment of remote from 0 to 1.

LIMITED LIFETIME WARRANTY

The manufacturer warrants this fan to be free from defects in workmanship and materials present at time of shipment from the factory for a lifetime from the date of purchase by the original purchaser. The retailer also warrants that all other fan parts, excluding any glass or plastic blades, to be free from defects in workmanship and material at the time of shipment from the factory for a period of one year after the date of purchase by the original purchaser. The manufacturer agrees to correct such defects without charge or at its option replace the ceiling fan with a comparable or superior model.

To obtain warranty service, present a copy of the receipt as proof of purchase. All costs of removing and reinstalling the product are your responsibility. Any damage to any part such as by accident or misuse or improper installation or by affixing any accessories, is not covered by this warranty. The manufacturer assumes no responsibility whatsoever for fan installation during the limited lifetime warranty. Any service performed by an unauthorized person will render the warranty invalid.

Due to varying climate conditions, this warranty does not cover any changes in brass finish, including rusting, pitting, corroding, tarnishing or peeling. Brass finishes of this type give their longest useful life when protected from varying weather conditions. Any glass provided with this fan is not covered by the warranty.

Any replacement of defective parts from the ceiling fan must be reported within the first year from the date of purchase. For the balance of the warranty, call our customer service department for return authorization and shipping instructions so that we may repair or replace the ceiling fan. Any fan or parts returned improperly is the sole responsibility of the purchaser. There is no other expressed warranty. The manufacturer disclaims any and all warranties. The duration of any implied warranty which cannot be disclaimed is limited to the time period as specified in the expressed warranty. The manufacturer shall not be liable for incidental, consequential, or special damages arising out of or in connection with product use or performance except as may otherwise be accorded by law. This warranty gives specific legal rights, and you may also have other rights which vary from state to state.

This warranty supersedes all prior warranties.

Note: A small amount of “wobble” is normal and should not be considered a defect.

REPLACEMENT PARTS LIST

For replacement parts, call the customer service department at 888-251-1003, 8 a.m. - 8 p.m., EST, Monday - Sunday. You could also contact us at partsplus@lowes.com.
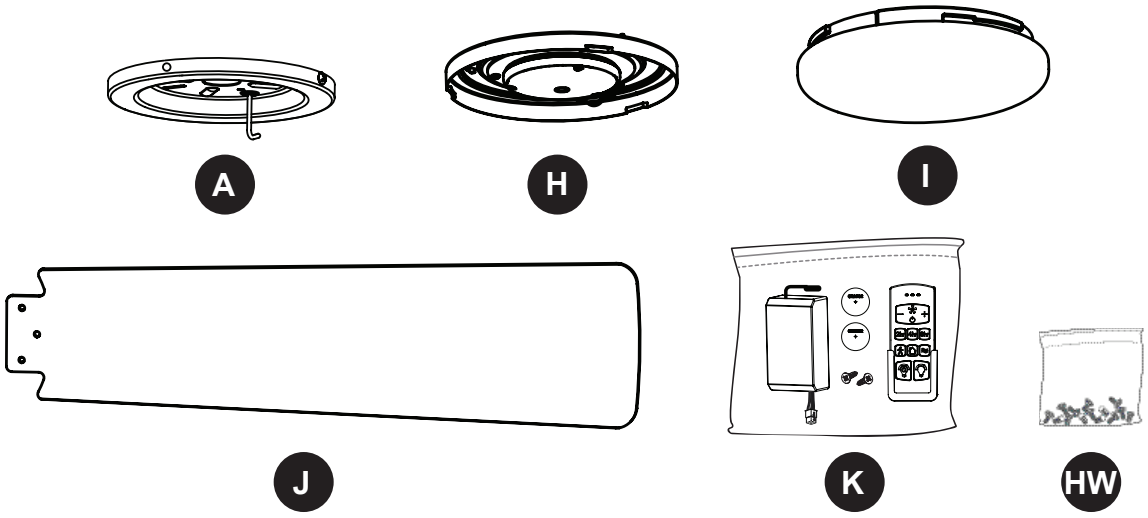
PART	DESCRIPTION	#5127878	#5127879	#5190472
A	Mounting Bracket	4L000016240	4L000016230	4L000016230
H	Light Kit	4L000016250	4L000016250	4L000016250
I	Glass Bowl	4L167600001	4L167600001	4L167600001
J	Blade (x5)	4L086260001	4L086260002	4L086260003
K	Remote Pack	4L000016450	4L000016450	4L000016450
HW	Hardware Kit	4L000016260	4L000016260	4L000016260