Veil®

Toilet tank, 1.28 gpf

K-28141-RA

Features

- Two-piece design
- 1.28 gpf (4.8 lpf)
- Right-hand Polished Chrome trip lever
- Combines with K-28121 bowl to create a complete K-28161-RA toilet
- AquaPiston® canister optimizes the flow out of the tank, harnessing gravity and the natural, powerful reducing cascade of water to increase the power and effectiveness of the flush

Recommended Products/Accessories

K-28122-R Right-hand trip lever (Qty 3)

Codes/Standards

ASME A112.19.2/CSA B45.1

KOHLER® Toilets and Seats Limited Warranty

See website for detailed warranty information.

Available Colors/Finishes

Color tiles intended for reference only.

Color	Code	Description
	0	White

Veil®

Toilet tank, 1.28 gpf

K-28141-RA

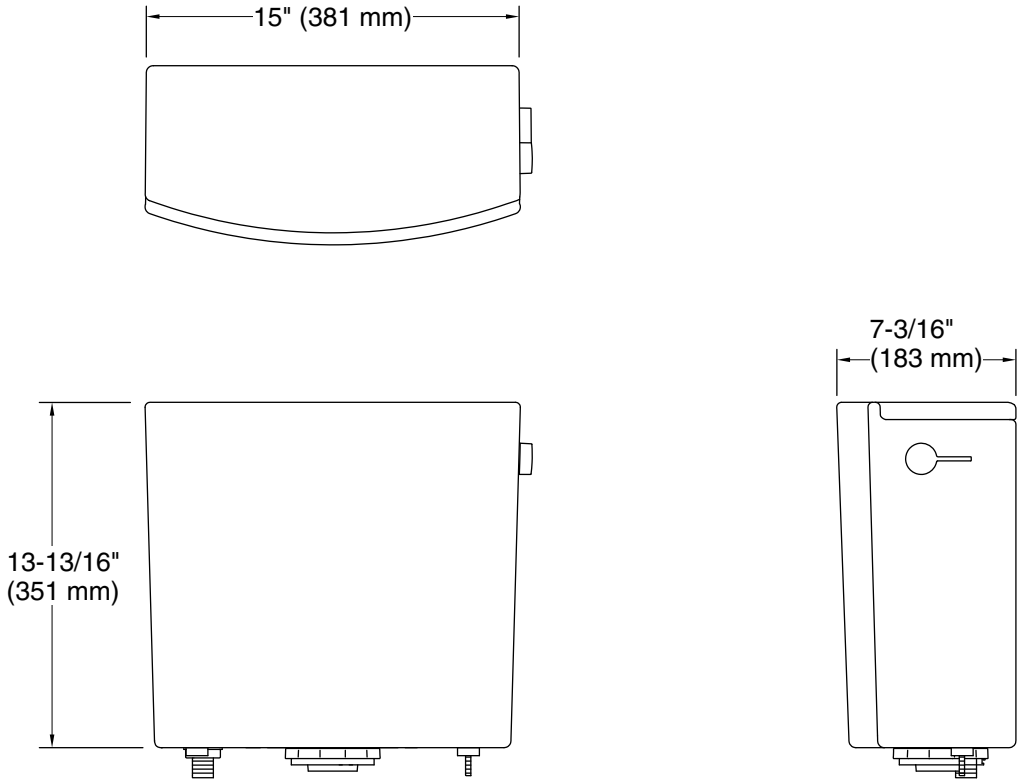

Technical Information

All product dimensions are nominal.

Toilet type:	Bowl-mount
Flush type:	AquaPiston, Revolution 360

Fixture Supply Requirements

Min static pressure:	15 psi (103.4 kPa)
Max static pressure:	80 psi (551.6 kPa)

Notes

Install this product according to the installation instructions.