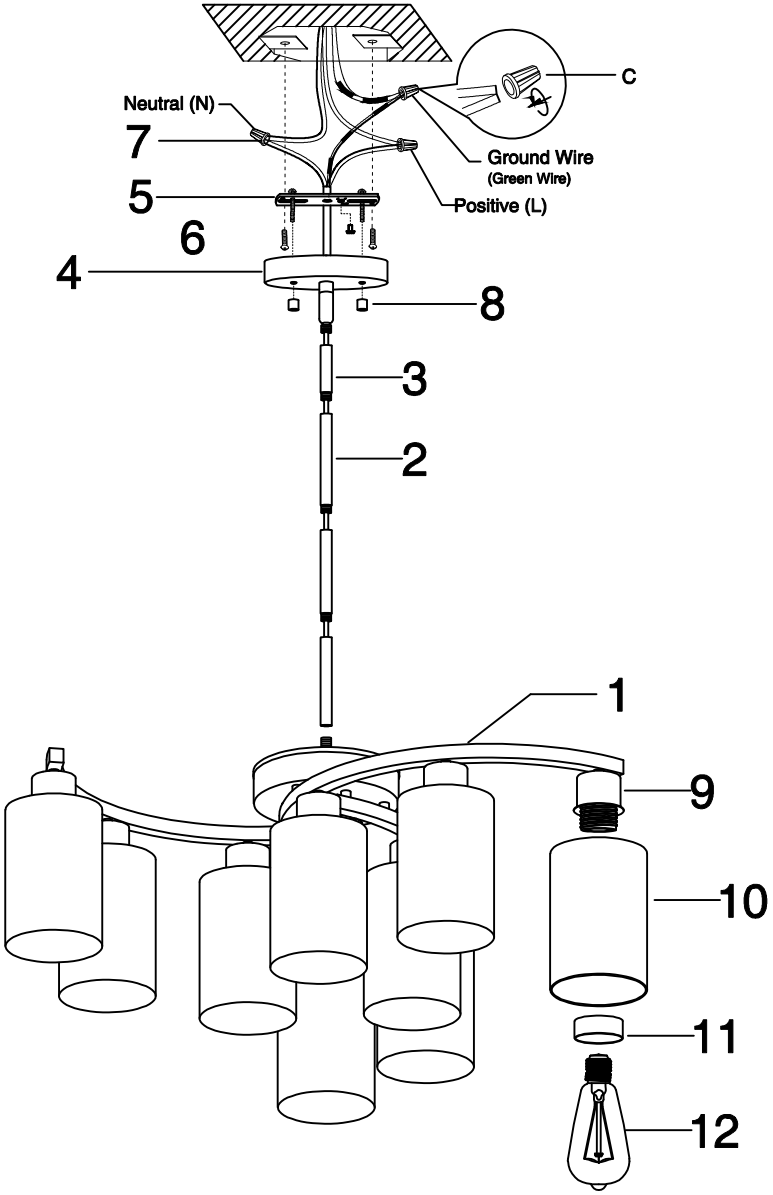

1:Fasten iron pipes 2 and 3 to lamp base 1 using locking mechanisms.
2:Securely fix ceiling pan 4 to iron pipe 2 with threaded engagement.
3:Torque mounting plate 5 to junction box using machine screws 6 (recommended: 2.5-3 N·m).
4:Complete electrical connections between main wires and lamp body wires via twist-lock connector 7.
5:Anchor wall mount 4 to cladding panel 5 employing decorative compression nut 8.
6:Engage lampshade 10 with luminaire body 9 through collet adapter 11 (tactile click confirmation).
7:Install bulb 12 into socket (CAUTION: Bulb excluded from standard components)