Swing•N•Slide®

Anchor-It™

NE 4521

Kit Includes:

Qty.	Description
4	Anchor
4	Metal Anchor Strap
4	1-1/2" Lag Bolt
4	2" Hex Head Bolt
4	Flat Washer
4	Loc Nut
1	Illustrated Plan

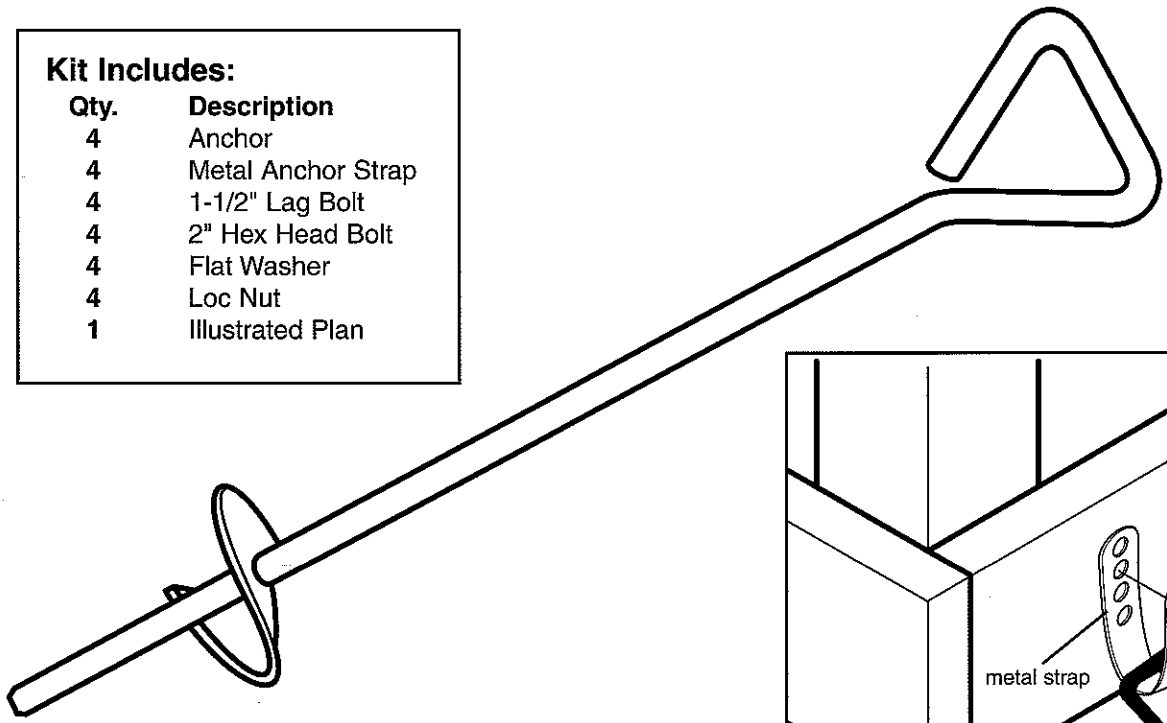

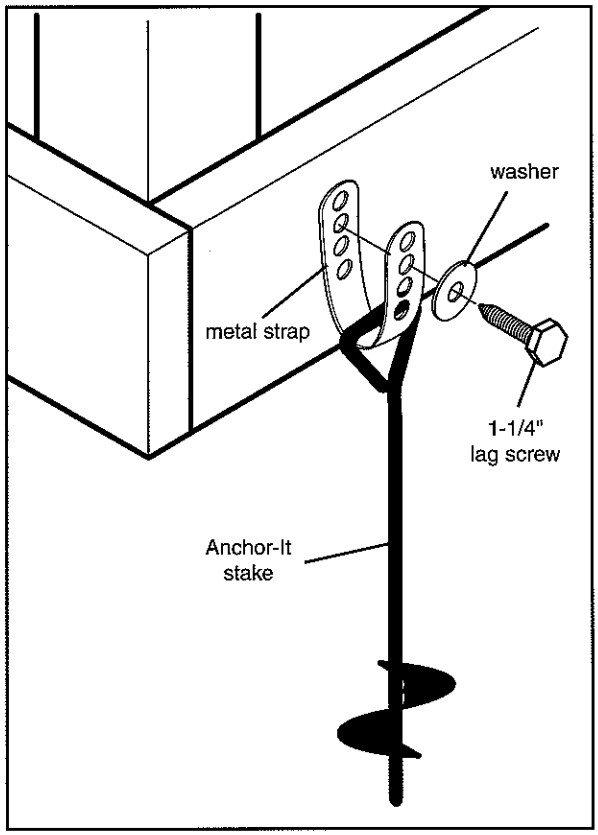

Instructions for Anchoring Swing•N•Slide Activity Centers

1. Determine the final location of your activity center.
2. Place the Anchor-It stakes adjacent to the base and near the corners of your activity center (at the bottom of the legs on swing sets) and twist the auger-style stakes into the ground until only the loop is exposed.
3. Place the metal strap through the loop of the Anchor-It stake and secure it to the unit with a lag screw and washer as illustrated to the right. **Note:** Attach the strap to the unit with as little play as possible using whatever holes in the strap that work best.

Use the Anchor-It stakes to secure almost any item to the ground. Included in the hardware are four bolts and loc nuts for use with non wood applications.

®

SEAL OF APPROVAL

©Swing•N•Slide Corp. 1997
Printed in U.S.A.