Product Specs Sheets

Cover Page

Ambra 120F Pack 1

Features

- Complete Vanity Unit with Mirror
- Available in 4 Finishes: Glossy White, Nordic Oak, Anthracite, and Samara Ash
- Free Standing Installation with Four Legs in Bright Chrome
- Two soft close drawers with organizer in upper drawer
- Two soft close doors with 105 degree opening capability for easy cabinet access
- Includes integrated sink and vanity top in gloss white solid surface material with faucet hole and overflow
- Fully assembled structure and front made of engineered wood in wood finishes and high gloss lacquered
- Handle integrated in front of furniture
- Hidden hanging bracket directly assembled with great resistance and depth regulations
- Made in Spain

Related Items:

- WSBC 53991 | Push Waste Drain
- WSBC 53922 | Decorative Trap

SKU# | Options

- Ambra 120F Pack 1 NO | Nordic Oak
- Ambra 120F Pack 1 SA | Samara Ash
- Ambra 120F Pack 1 WG | Glossy White
- Ambra 120F Pack 1 AN | Anthracite

Finishes

- Nordic Oak
- Samara Ash
- Glossy White
- Anthracite

*** WS Bath Collections reserves the right to revise dimensions or information on this sheet without notice**

Collection	Model |	Dimensions Metric	
Ambra	Ambra 120F Pack 1	*1 inch = 2.54 cm* *1 inch = 25.4 mm*	WS® BATH COLLECTIONS 1051 Lea Drive - Collegeville, PA 19426 Tel. 215 513 9400 - Fax 610 831 0215 www.wsbathcollections.com - info@wsbathcollectins.com

Product Specs Sheets

Technical features

Technical drawing	Name	Material	Colour	Colour
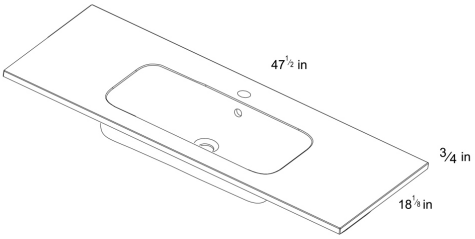	**SALONE**			Gloss White
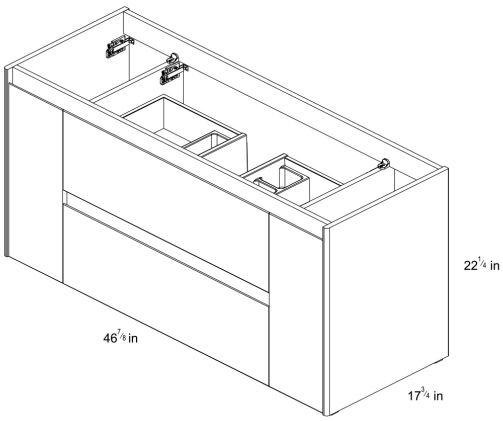	**AMBRA** 1 Door / 2 Drawers / 1 Door			Nordic Oak
				Samara Ash
				Gloss White
				Anthracite
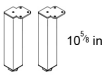	**LEGS**			Chrome

Technical information

STRUCTURE	MDF board in 5/8 in. continous wrapping in 2D/ Cyclum Process.
FRONT	MDF board in 5/8 in. continous wrapping in 2D/ Cyclum Process.
HANDLE	Integrated in the front of the furniture.
DRAWER	Drawers made in mokka textile polylaminate coated board with hidden parcial extraction runners with soft close system. Includes organizer in upper drawer. Lower drawer useful space (widexhighxdepth): $20^{1/16}$ x $4^{5/16}$ x $12^{2/4}$ in.
WALL HANGING BRACKET	Hidden hanging bracket of directly assembled with great resistance and depth regulations.
HINGE	105° opening, $1^{3/8}$ in. cap, easy assembly and soft close system.
LEGS	Metallic in bright chrome finish. (optional)
PIPE DEPTH	Pipe depth $2^{1/54}$ in.

Collection	Model |	Dimensions Metric	
Ambra	Ambra 120F	*1 inch = 2.54 cm* *1 inch = 25.4 mm*	WS® BATH COLLECTIONS 1051 Lea Drive - Collegeville, PA 19426 Tel. 215 513 9400 - Fax 610 831 0215 www.wsbathcollections.com - info@wsbathcollections.com

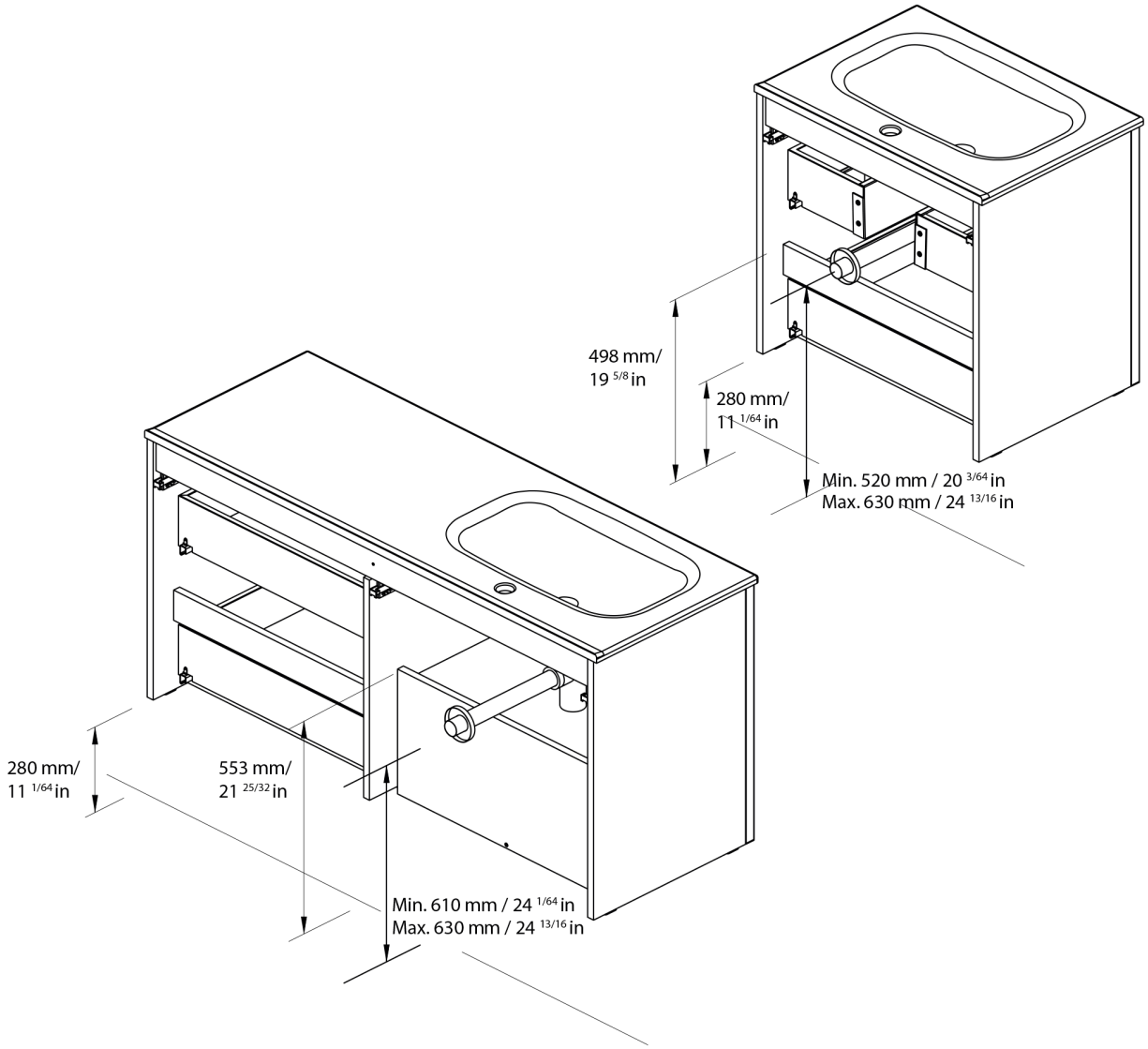

ES	EN
Las cotas indicadas en los dibujos son en función de la altura de la pata del conjunto, en caso de que el mueble vaya suspendido y esta altura no se respete, dichas cotas también variarán.	Dimensions indicated in the drawing are based on the level of the whole leg, in case of wall hanging the furniture dimensions also may vary.

Collection Ambra	**Model** | Ambra 120F	Dimensions Metric *1 inch = 2.54 cm* *1 inch = 25.4 mm*	WS® BATH COLLECTIONS 1051 Lea Drive - Collegeville, PA 19426 Tel. 215 513 9400 - Fax 610 831 0215 www.wsbathcollections.com - info@wsbathcollections.com

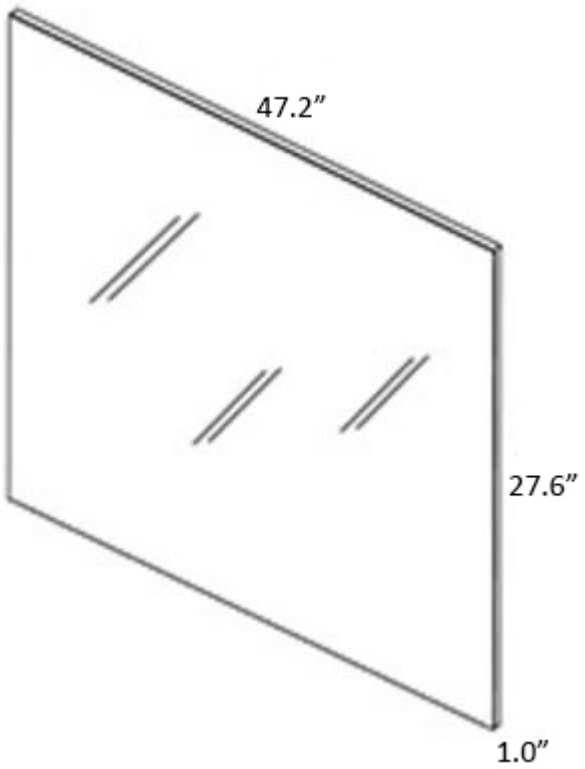

Collection	Model	Dimensions Metric	
Murano	Murano 120	*1 inch = 2.54 cm* *1 inch = 25.4 mm*	WS® BATH COLLECTIONS 1051 Lea Drive - Collegeville, PA 19426 Tel. 215 513 9400 - Fax 610 831 0215 www.wsbathcollections.com - info@wsbathcollections.com

We recommend the following items that work with your sink.

TRAPS

WSBC 53922
Our best seller

DRAINS

WSBC 53991
Push waste drain (click clack)
with overflow

MOUNTING HARDWARE

Wall-mount installation

Bolts

Vessel/ countertop installation

Silicone *(optional)*

Collection Ambra	**Model** | Ambra 120F Pack 1	Dimensions Metric *1 inch = 2.54 cm* *1 inch = 25.4 mm*	WS® BATH COLLECTIONS 1051 Lea Drive - Collegeville, PA 19426 Tel. 215 513 9400 - Fax 610 831 0215 www.wsbathcollections.com - info@wsbathcollections.com