WOODFENCEBOM V1 2/13

Barrette

Wood Fence

Assembly and Installation Instructions

PLEASE READ OWNER'S MANUAL COMPLETELY BEFORE ASSEMBLING YOUR FENCE.

ALL STATED SIZES ARE NOMINAL DIMENSIONS.

Owner's Manual

Version

1.0

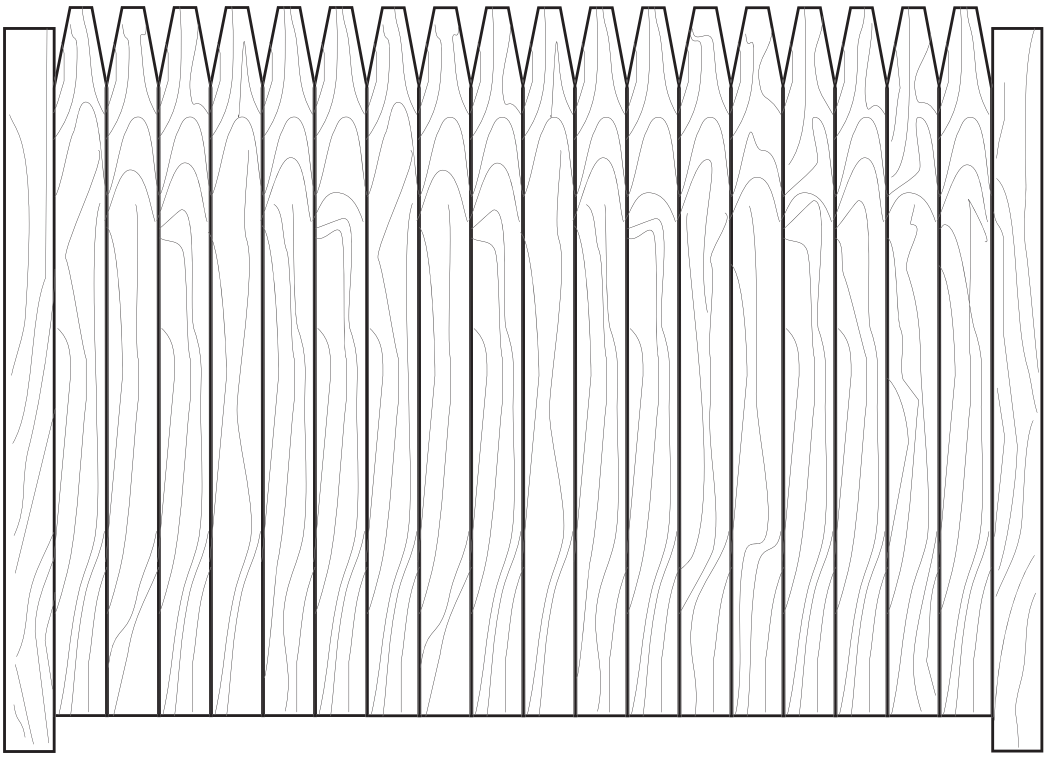

To register your product, please visit: www.barretteoutdoorliving.com/product-registration

Thank you for choosing the Barrette Outdoor Living Fence. Please read the instructions completely before assembling your fence. Retain manual and your dated sales slip for future reference and warranty claims.

Before You Begin…

Check your local zoning laws.

- Local zoning laws and Home Owners Associations may regulate the location, style and height of your fence or even require a permit signoff beforehand.
- Check local codes for frost line depth and regulations.
- Additional products and assembly may be required to meet wind code requirements. Notice of acceptance (NOA) can be found at www.miamidade.gov/building/pc-search_app.asp

Contact your local utilities companies.

- You must have the utility companies clearly mark your property for electrical, gas or water lines to avoid puncturing any unseen underground utilities.

Pay to mark your property line.

- Being proactive will save you time and money from any disputes from neighbors.

Material Checklist:

- ☐ Circular Saw or Hand Saw
- ☐ Bag of High Strength Concrete (1½ bags per hole average)
- ☐ Coarse Gravel (6" per hole)
- ☐ Water for Concrete
- ☐ Clean Rags
- ☐ Post Hole Digger
- ☐ Safety Glasses
- ☐ String Line Stakes
- ☐ Spool of String
- ☐ Line Level
- ☐ Tape Measure
- ☐ Shovel

ATTENTION: Before you assemble the fence:

PLEASE TAKE A COMPLETE INVENTORY OF ALL PARTS USING THE KIT CONTENTS.

DO NOT ATTEMPT TO ASSEMBLE THE FENCE IF PARTS ARE MISSING OR DAMAGED.

Please do not return the product to the store, for assistance or replacement parts call:

1-800-336-2383

Panel Assembly:

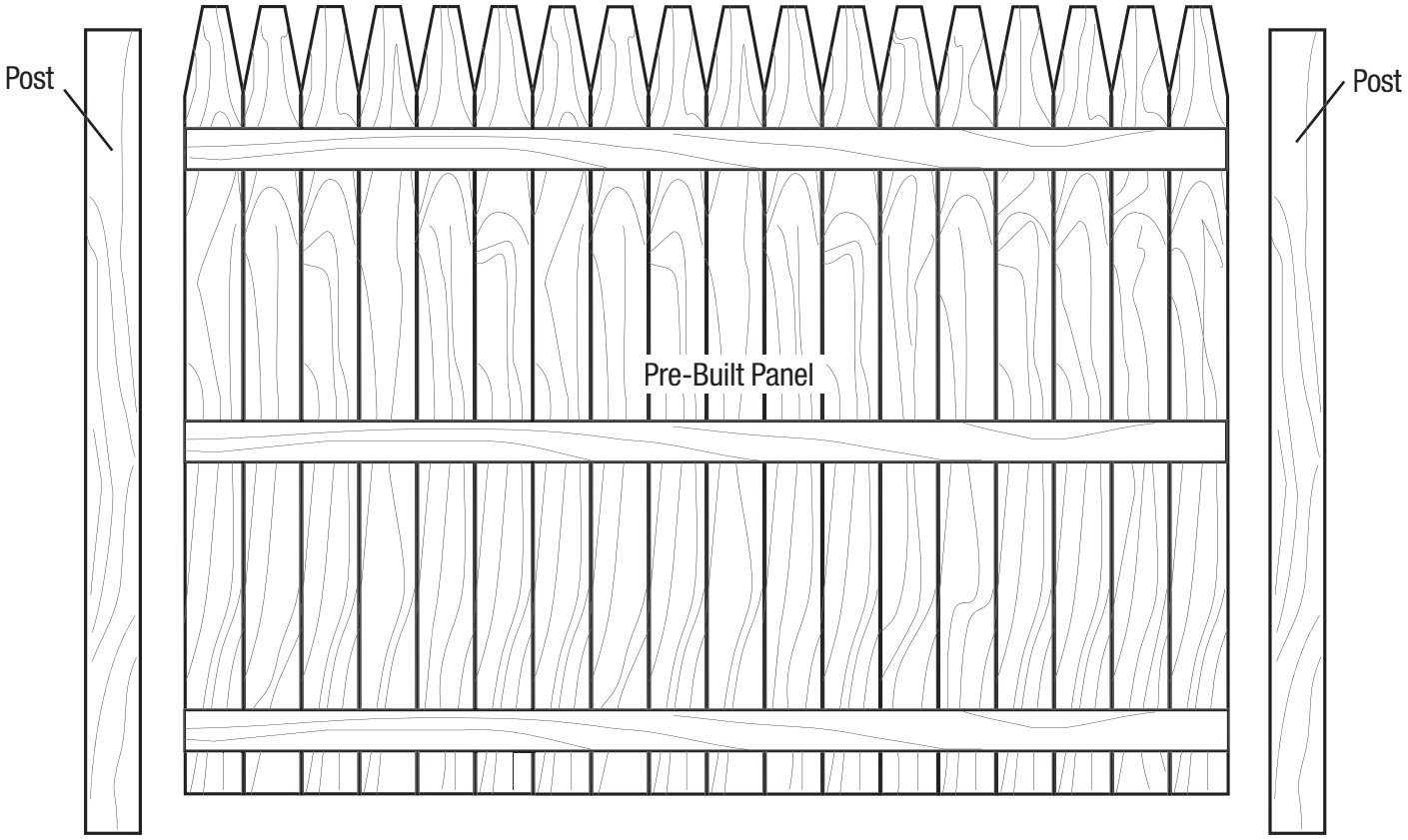

*Not all styles require an aluminum insert in bottom rail

1

Begin by staking out the fence. Locate any gates.

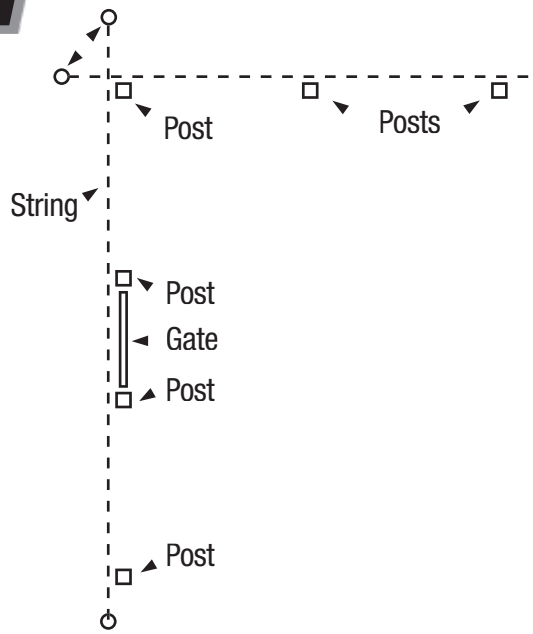

2

Set posts 8' on center. Dig post holes 12" in diameter by 36" deep* with 6" of gravel. (Check local frost line depths). Square up corners using the 3-4-5 right triangle method.

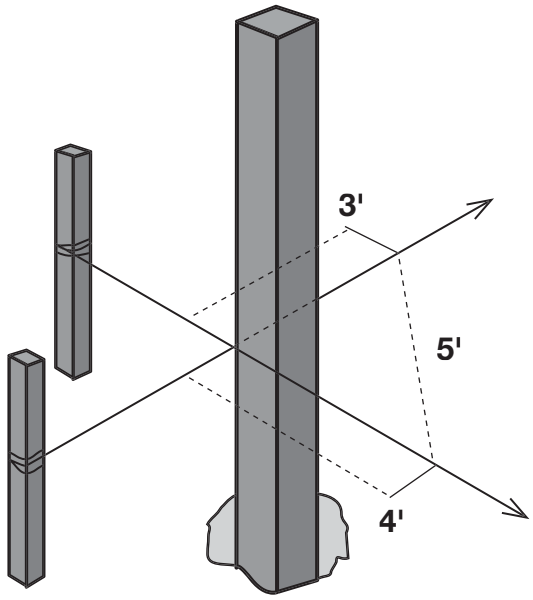

3

*If frost line does not exceed 30", put 6" of gravel into bottom of both holes and insert posts. Add concrete to first post hole according to manufacturers instructions. Ensure first post is plumb and level. Let concrete set making sure panel will be 2" above ground. Do not add concrete to second hole until later in installation.

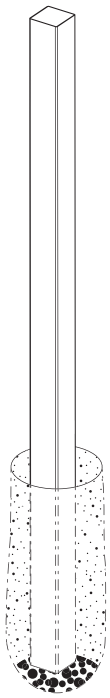

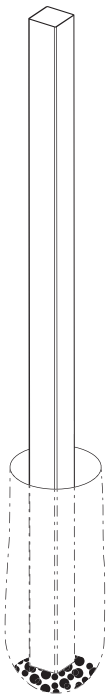

4

If frost line exceeds 30" dig hole to the appropriate depth and then add 6" of gravel for post drainage. Add concrete according to manufacturers instructions until a depth of 30" remains and let concrete set to create a footing. Set post in hole ensuring it is plumb and level. Fill hole with concrete according to manufacturers instructions. Make sure panel will be 2" above ground, or check with local building codes on fence height requirements. Go to step 5.

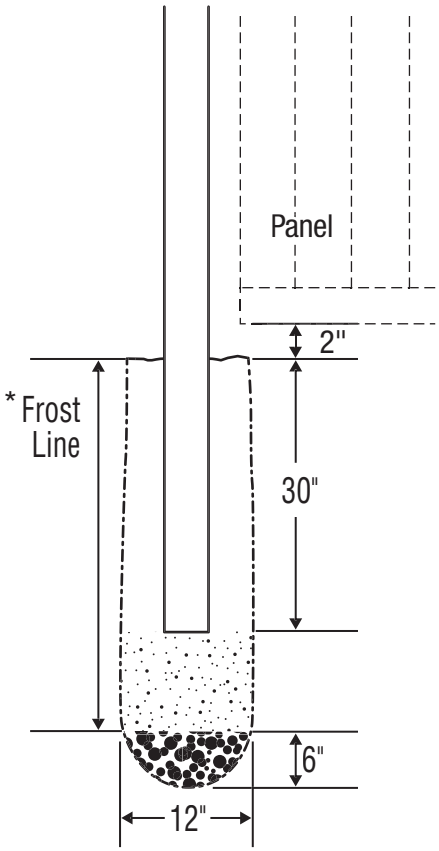

*Check local codes for frost line depth and regulations.

5

Level posts by running line level along the top of posts from one end to the other end. Use string to help create a straight line if needed. Once post is set in place, use supports on two sides to keep post plumb and level.

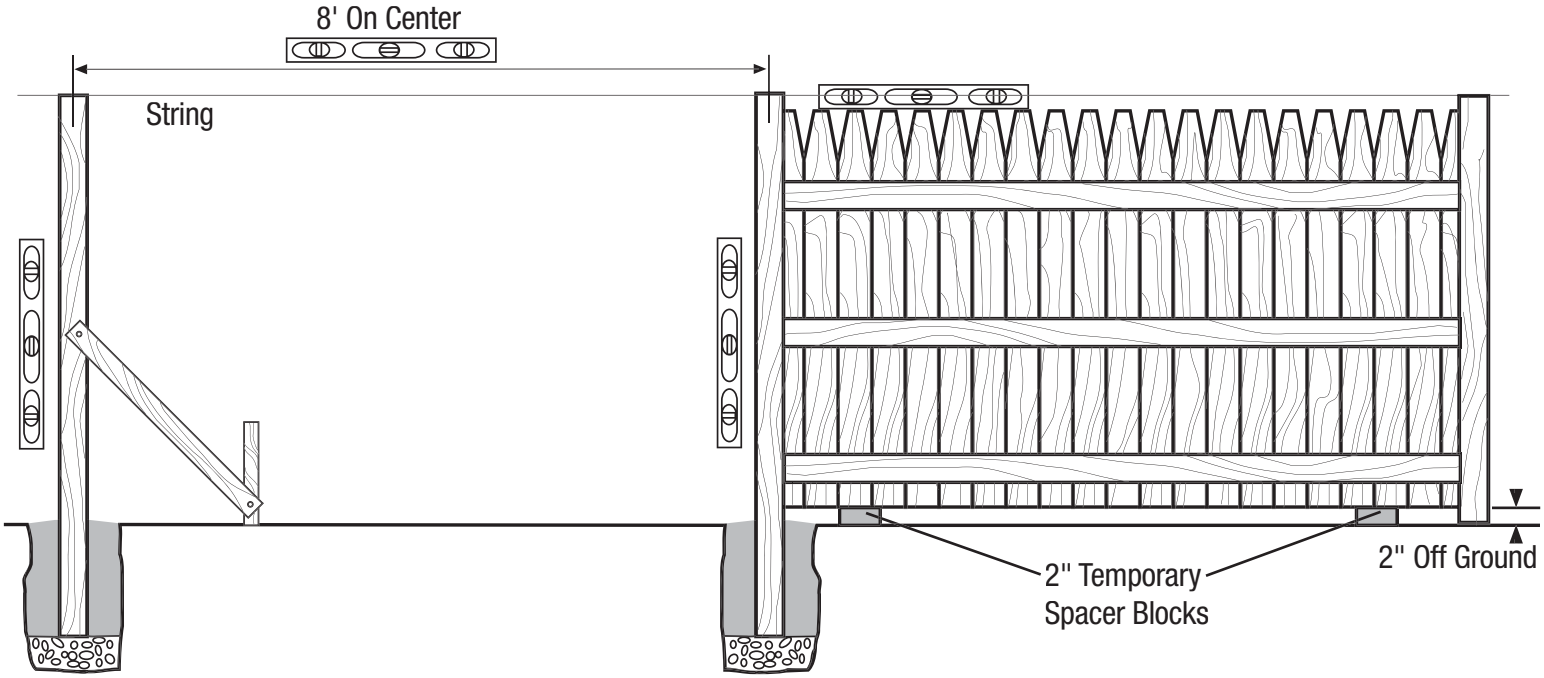

6

Pre-drill all holes through the picket and rail. This will prevent wood from splitting.

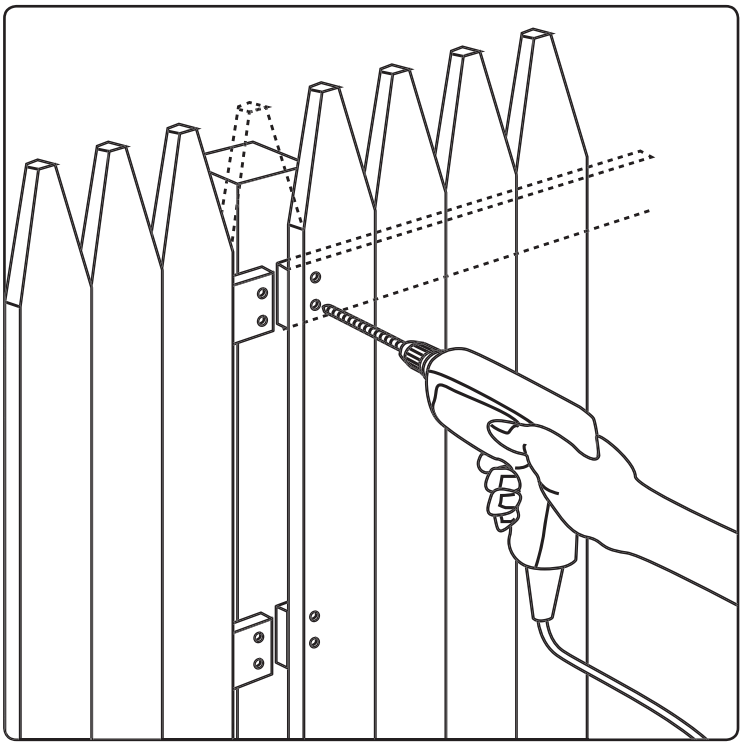

7

Attach fence section to posts with rust-proof screws or nails.

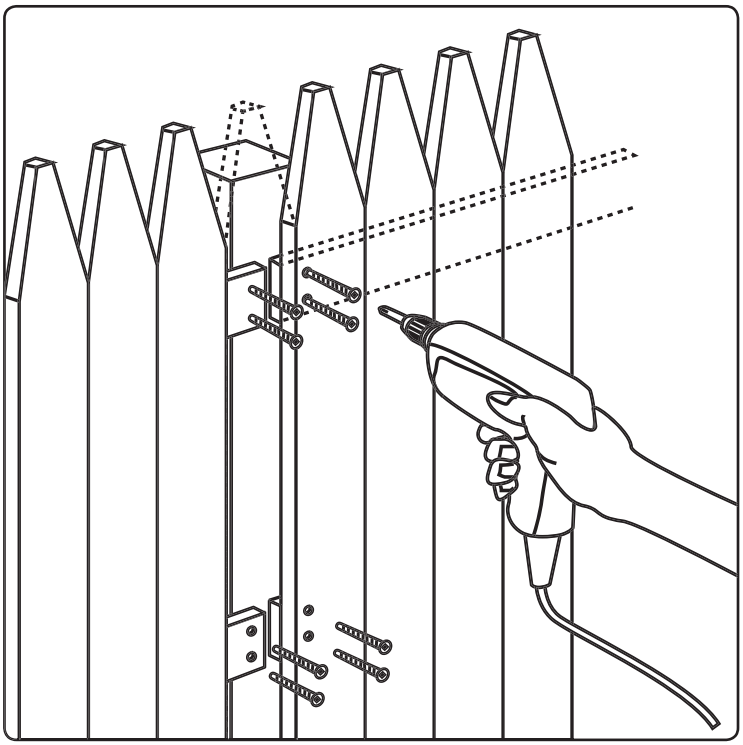

Top View

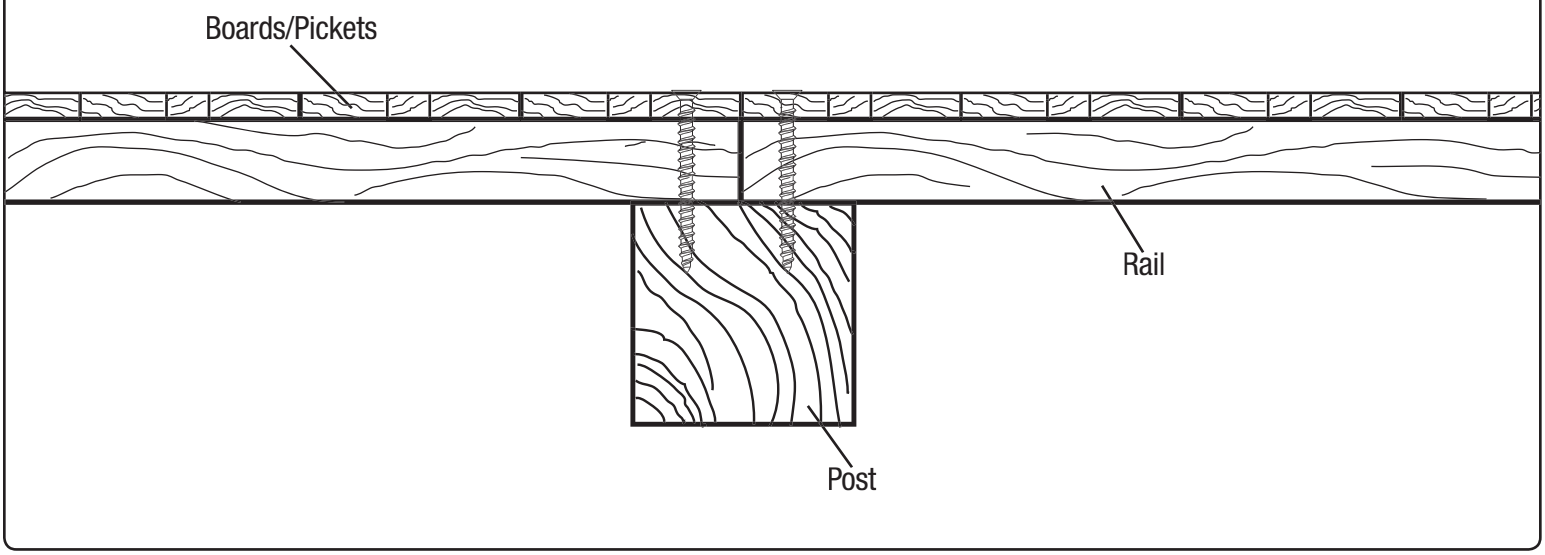

8 Repeat process from Steps 2 - 7 until all fence panels and posts have been installed.

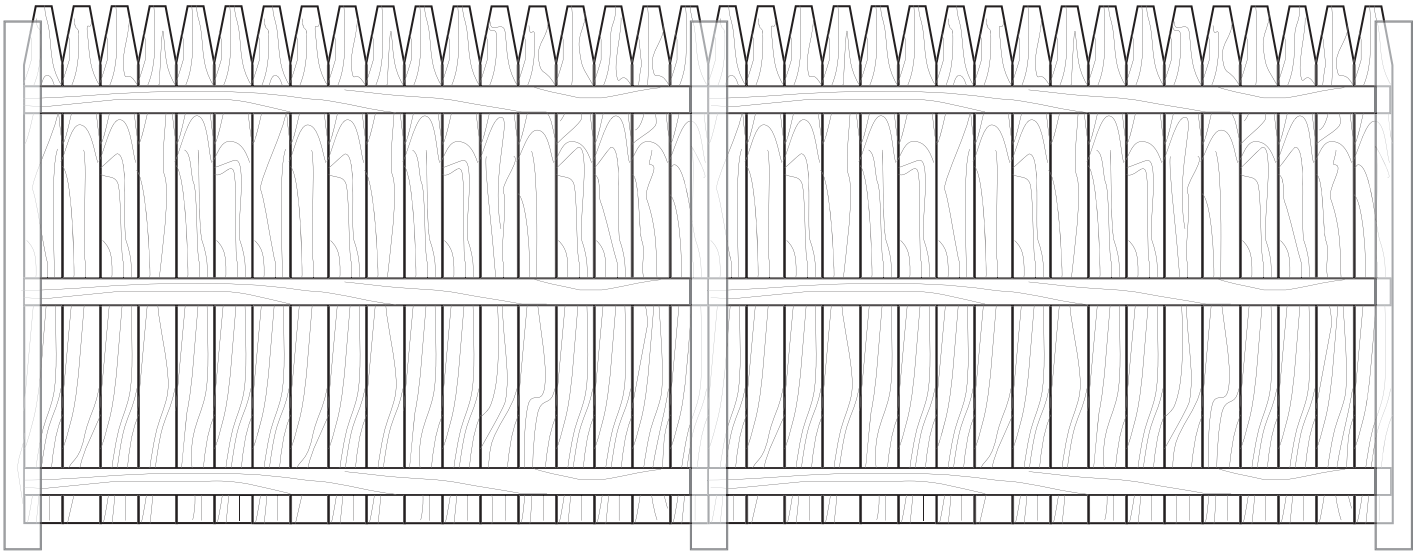

Transferable Limited Lifetime Warranty

What is covered: Barrette Outdoor Living warrants vinyl and aluminum products to include; vinyl and aluminum fence, vinyl and aluminum railing and plastic lattice against defects or workmanship for as long as you own your home. Barrette Outdoor Living will at its option replace the product in question with new product of the same or equivalent value at no charge. Barrette Outdoor Living warrants these products against peeling, flaking, splintering, corrosion, rusting or abnormal discoloration under normal use and service per ASTMD 2244. This warranty extends to the original purchaser or transferee as specified herein on the products noted above. Separate and distinct warranties for hardware and other products are not covered under this warranty.

What this warranty does not cover: This limited warranty does not cover damage resulting from accident, unreasonable use, neglect, alteration, improper service, improper installation, acts of God or any other causes not arising out of defects in materials or workmanship. Additionally, this warranty does not cover costs of installation, removal, reinstallation or surface mold and mildew created by excessive environmental conditions. Any service or repair provided outside the scope of this limited warranty shall be at Barrette Outdoor Living's rate and terms then in effect.

What do we do to correct the problems? Should your Barrette Outdoor Living product prove defective under warranty, reference the website or call the phone number listed below. Your problem will be assigned a tracking number and an authorized Barrette Outdoor Living representative will contact you to arrange a convenient time to schedule an onsite inspection, or request pictures, if need be. If after inspection product is deemed to be manufacturer defect we will make arrangements to rectify the issue. You must have proof of your purchase in order for the problem to be corrected.

Transferee Coverage: Warranty coverage will be extended to one transferee on the above listed products with the following limitations. Transferee must obtain an original or copy of the initial sales receipt (with proof of date) from the previous owner(s). Additionally, if fence is purchased from a builder or installer, documentation must be supplied that names the product installed on property and date of transfer.

THIS WARRANTY IS IN LIEU OF ALL CONDITIONS OR WARRANTIES, EXPRESS, OR IMPLIED INCLUDING BUT NOT LIMITED TO ANY IMPLIED CONDITIONS OR WARRANTIES OR MERCHANTABILITY OR FITNESS FOR A PARTICULAR PURPOSE ON THE PART OF Barrette OR ITS LICENSORS, SOME STATES DO NOT ALLOW THE EXCLUSIONS OF IMPLIED WARRANTIES OR LIMITATIONS OF HOW LONG AN IMPLIED WARRANTY LASTS, SO THE ABOVE LIMITATIONS MAY NOT APPLY TO YOU. IF THE PRODUCT IS DEFECTIVE PER THE ABOVE COVERAGES, YOUR SOLE AND EXCLUSIVE REMEDY SHALL BE REPAIR OR REPLACEMENT AS PROVIDED ABOVE. BARRETTE AND ITS LICENSORS SHALL NOT BE LIABLE FOR ANY DAMAGES, LOSS OF USE, LOSS OF PROFITS OR INTERRUPTION OF BUSINESS WHETHER SUCH ALLEGED DAMAGES ARE BASED IN WARRANTY, TORT, CONTRACT, OR INDEMNITY. SOME STATES DO NOT ALLOW THE EXCLUSION OF LIMITATIONS OF INCIDENTAL OR CONSEQUENTIAL DAMAGES, SO THE ABOVE LIMITATIONS MAY NOT APPLY TO YOU. This warranty is valid only in the United States and Canada.

Refer to www.BarretteOutdoorLiving.com for specific details about warranty limitations.
1-800-336-2383

To register your product, please visit: www.barretteoutdoorliving.com/product-registration

© 2013 Barrette Outdoor Living • 7830 Freeway Circle • Middleburg Heights, Ohio • 44130
http://www.barretteoutdoorliving.com • 1-800-336-2383