SPECIFICATION SHEET

Shower System

SFS-1067

Multi-Function Shower System

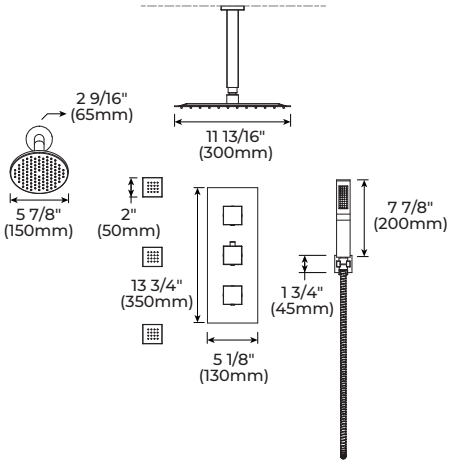

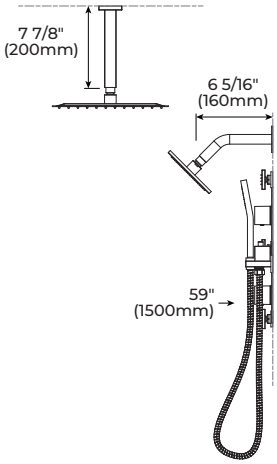

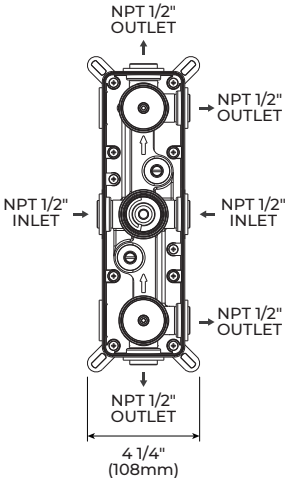

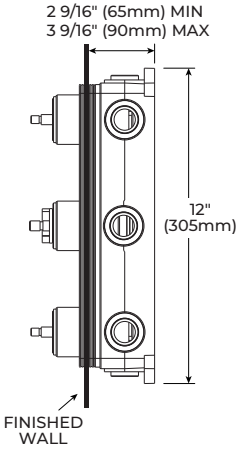

- Rough-In Valve Included
- Refer to the Installation Guide for complete installation instructions.

contact@everstein.com
+1 (888) 666-8220
everstein.com

EVERSTEIN®