CARE AND MAINTENANCE

Spot clean using a mild water-free solvent. Only a professional cleaner should undertake a complete overall cleaning.
The use of steam or water-based cleaners may cause excessive shrinking or staining.

NOTICE

* Please make sure that you have all parts indicated before you begin assembly of this item
* This item should be assembled on a soft surface to prevent scratching the finish during assembly
* This item may require periodic tightening

Part List and Hardware List

PIECE	DESCRIPTION	PICTURE	QUANTITY
A	TOP PART	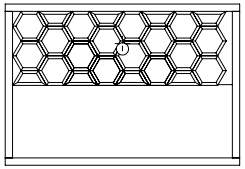	1X
B	Leg	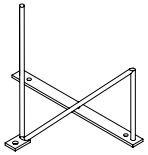	2X
HW1	ALLEN BOLT CSK 16X6	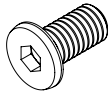	8X
HW2	WASHER 16X8		8X
HW3	Allen key 4 mm		1X

Item# NST9002A

Product dimensions: 19"W* 13.8"D* 19.7"H

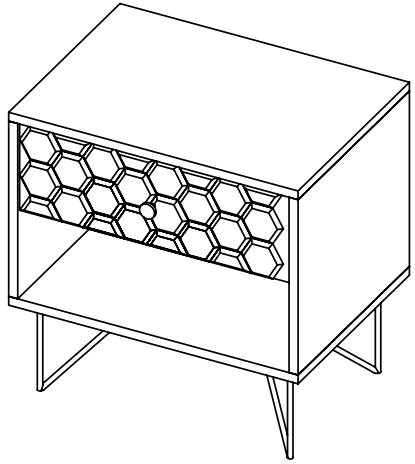

⚠ WARNING ⚠

Weight Capacity - 66 LBS
Warning : Do not stand on Nightstand
Warning : Do not over torque bolts.

The legs and hardware are located under the drawer

PREPARATION

Before beginning assembly of product, make sure all parts are present. Compare parts with package contents list and hardware contents list.
If any part is missing or damaged, do not attempt to assemble the product.
Estimated Assembly Time: 15 minutes.
Tools Required for Assembly (included): Allen Key

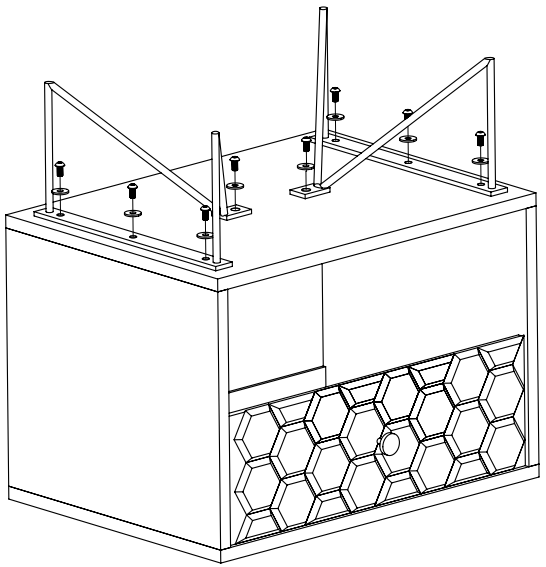

STEP1 OPEN THE ZIPPER ON THE INSIDE OF THE DRAWER AND TAKE OUT LEGS AND HARDWARE

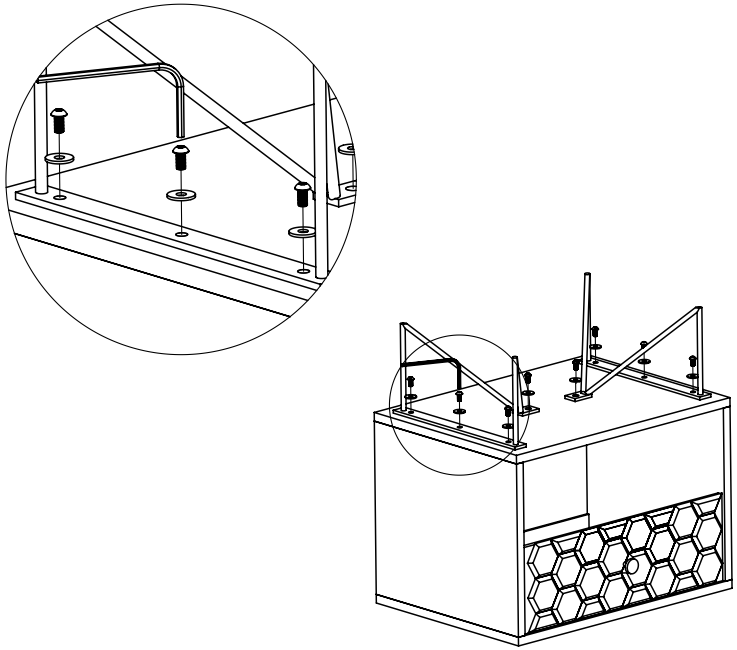

STEP2 PUT THE WASHERS (H2) ON THE ALLEN BOLT (H1) IN THE ORDER SHOWN IN THE PICTURE

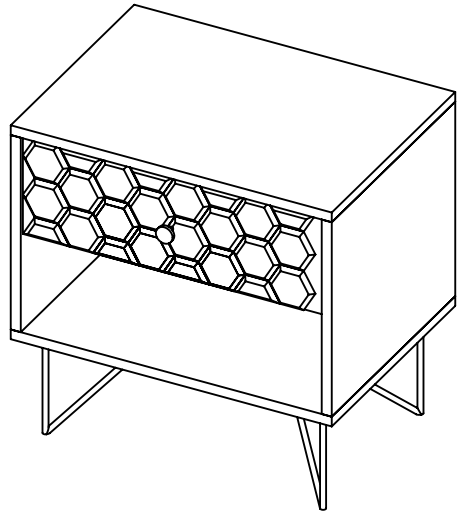

STEP3 INSERT ALLEN BOLT WITH WASHER INTO THE BOTTOM PANEL HOLE AS SHOWN AND TIGHTEN WITH ALLEN KEY(H3).
STEP 4 PLACE THE MARBLE (C) GENTLY AS SHOWN.

The legs and hardware are located under the drawer