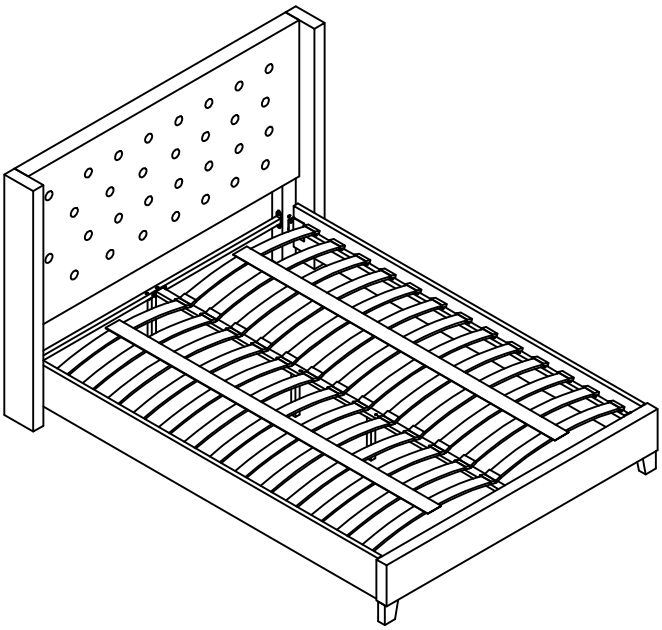

Thank you for your purchase!

Upholstered and Tufted Full/Queen/King Size Platform Bed

ASSEMBLY INSTRUCTIONS

Before You Begin:

Please identify all component parts and hardware pieces required before you begin. Carefully remove all of the components from the packaging and set aside for assembly. Assemble on a soft surface to prevent scratching during assembly.

Caution:

Tighten all components securely before use. Failure to do so may result in personal injury.
DO NOT use any sharp objects to open plastic wrapped components as damage to product or componenets may result.

Warning:

CHOKING HAZARD - Small Parts. Adult Assembly Required.

DO NOT ALLOW CHILDREN TO CLIMB ON FURNITURE

Serious or fatal injuries can occur from furniture tipping over. You must install Tipping Restraint Hardware (where included) to help prevent the unit from tipping and causing accidental injury, instability, death or damage. The tipping restraint is intended only as a safety measure, it is not a substitute for proper adult supervision.

To help prevent furniture from tipping over it must be permanently attached to the wall. Anti-Tip Safety Wall Straps suitable for the unit weight and wall materials (if not included) should be purchased and installed.

Customer Service Email: CustomerExperience@belnick.com | Phone: 866-552-2810

PARTS

1		1PC
2		1PC
3		2PCS
4		1PC
5		3PCS
6		28PCS

7		1PC
8		1PC
9		1PC
10		1PC
11		1PC
12		2PCS

B		8PCS
C		8PCS
D		2PCS
E		2PCS
F		10PCS
G		10PCS

H		8PCS
I		1PC
J		1PC
K		2PCS
L		28PCS
M		14PCS

STEP 1

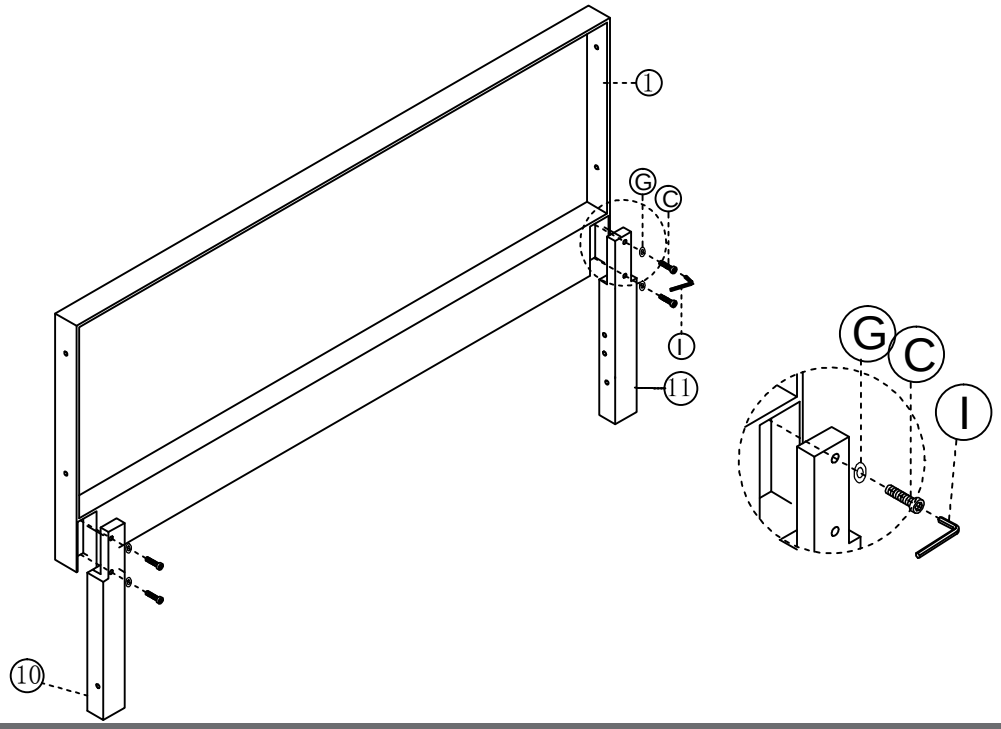

STEP 2

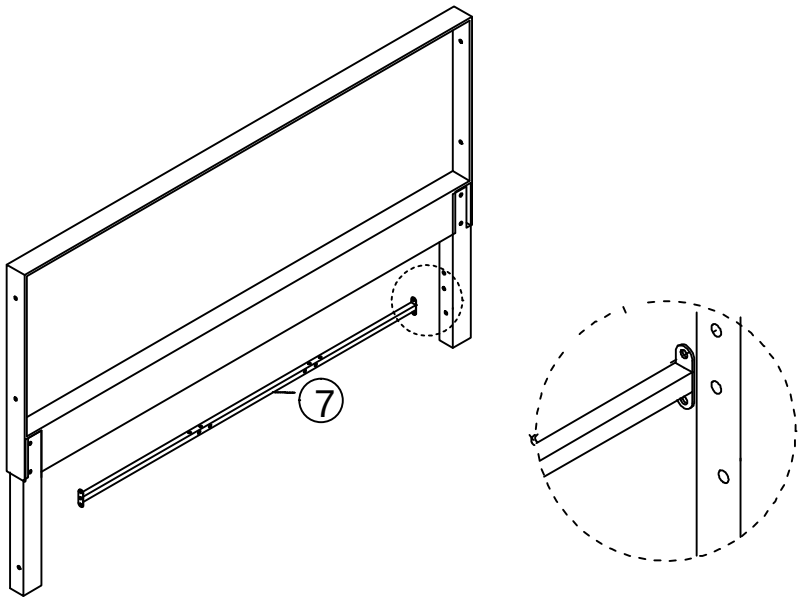

STEP 3

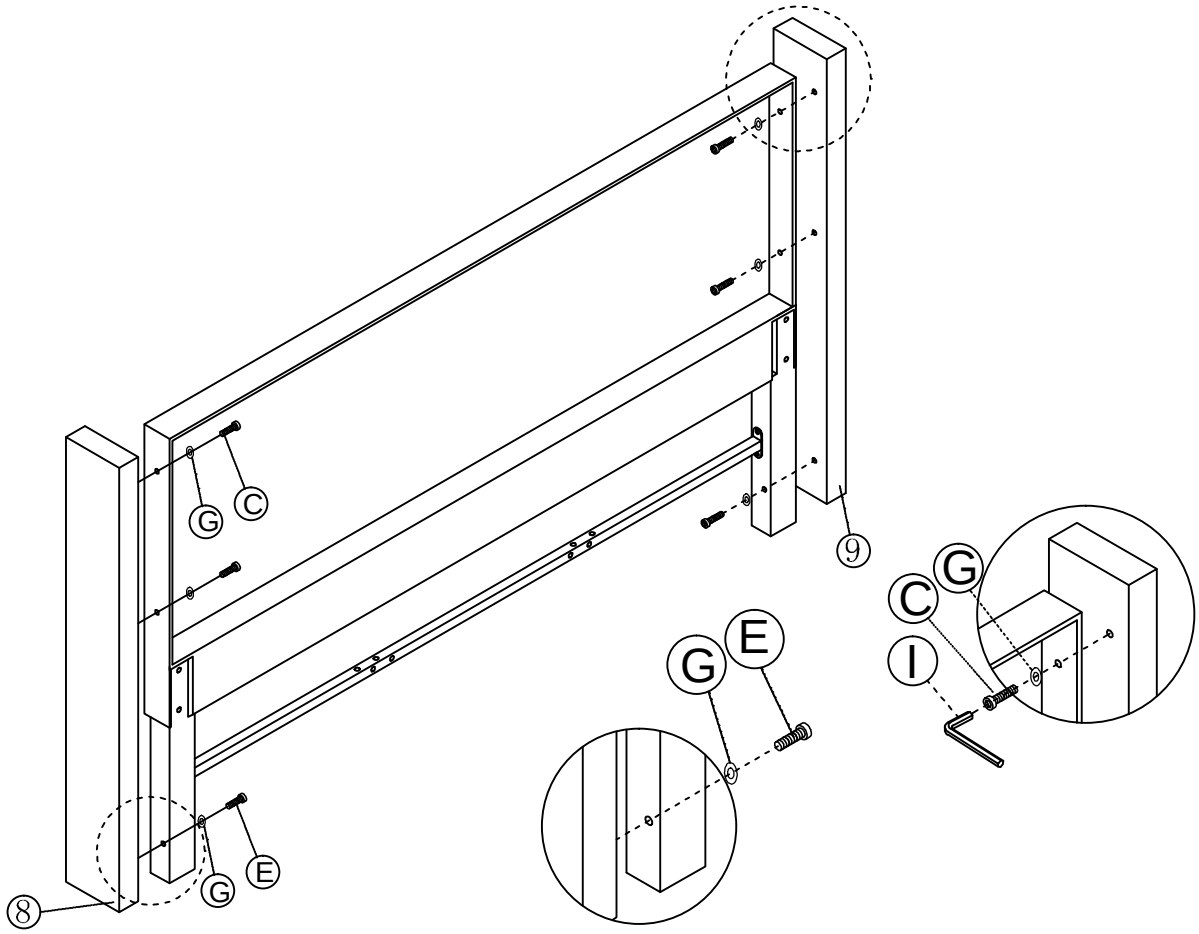

STEP 4

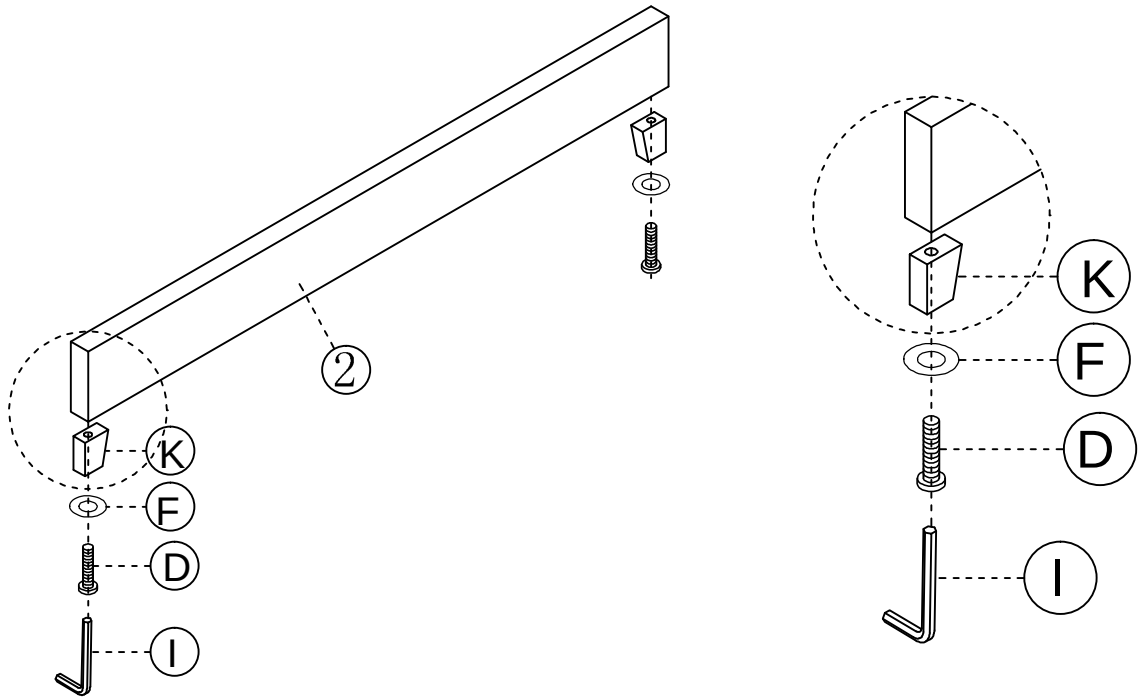

STEP 5

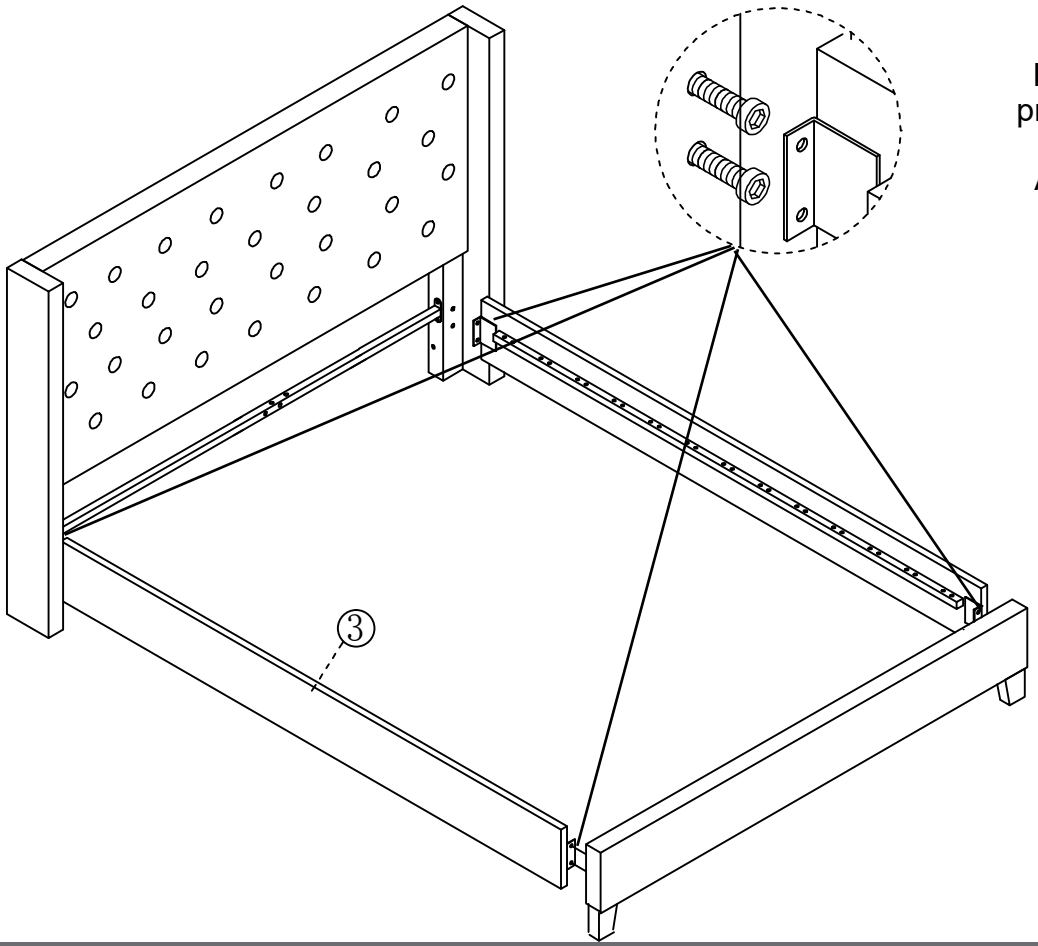

Loosen the screws pre-assembled in the side rail (Part 3). Attach the side rail then tighten the screws.

STEP 6

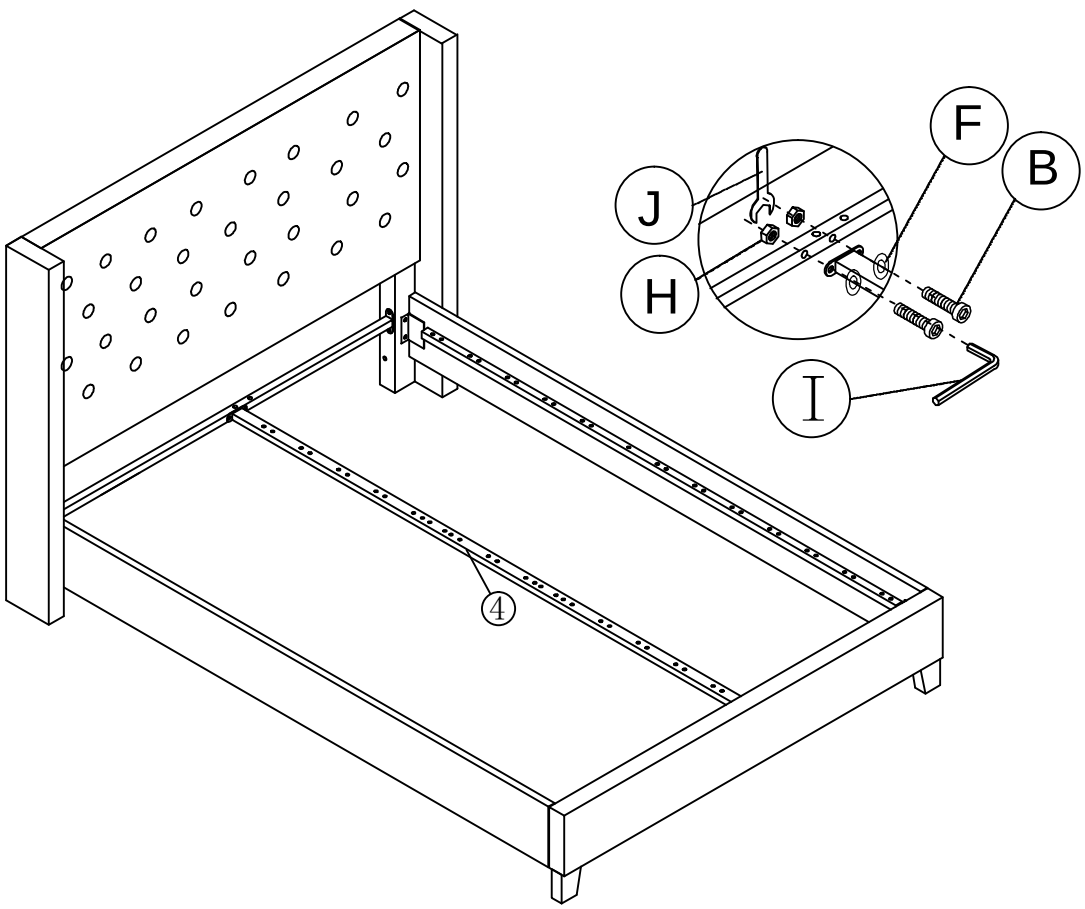

STEP 7

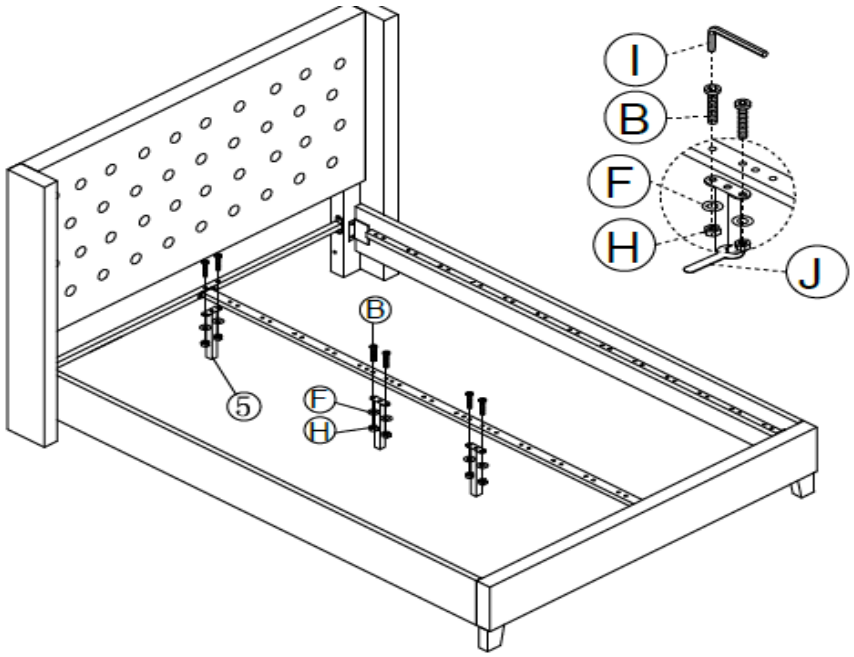

STEP 8

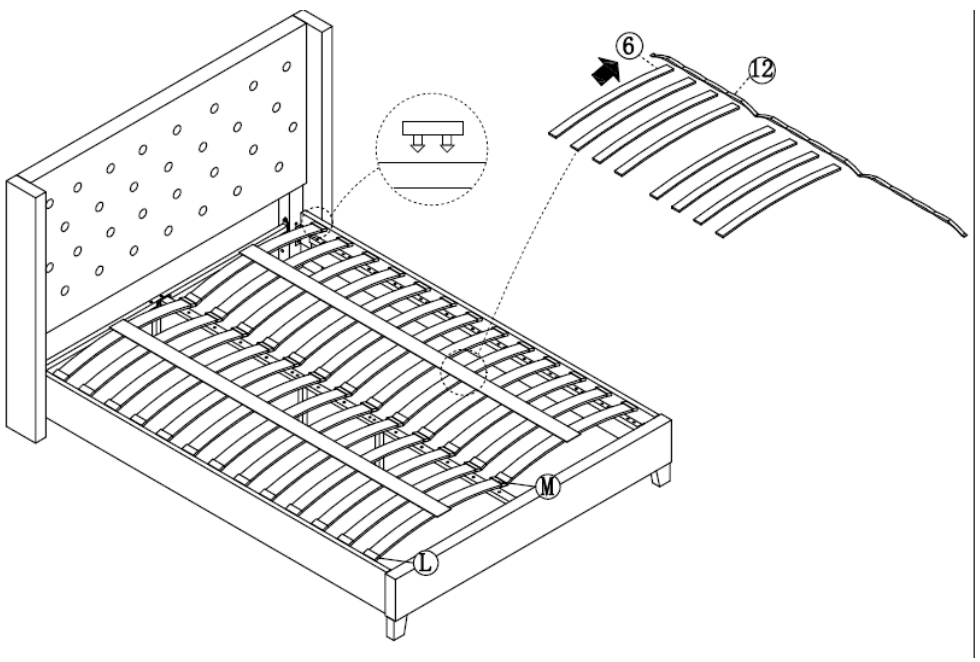
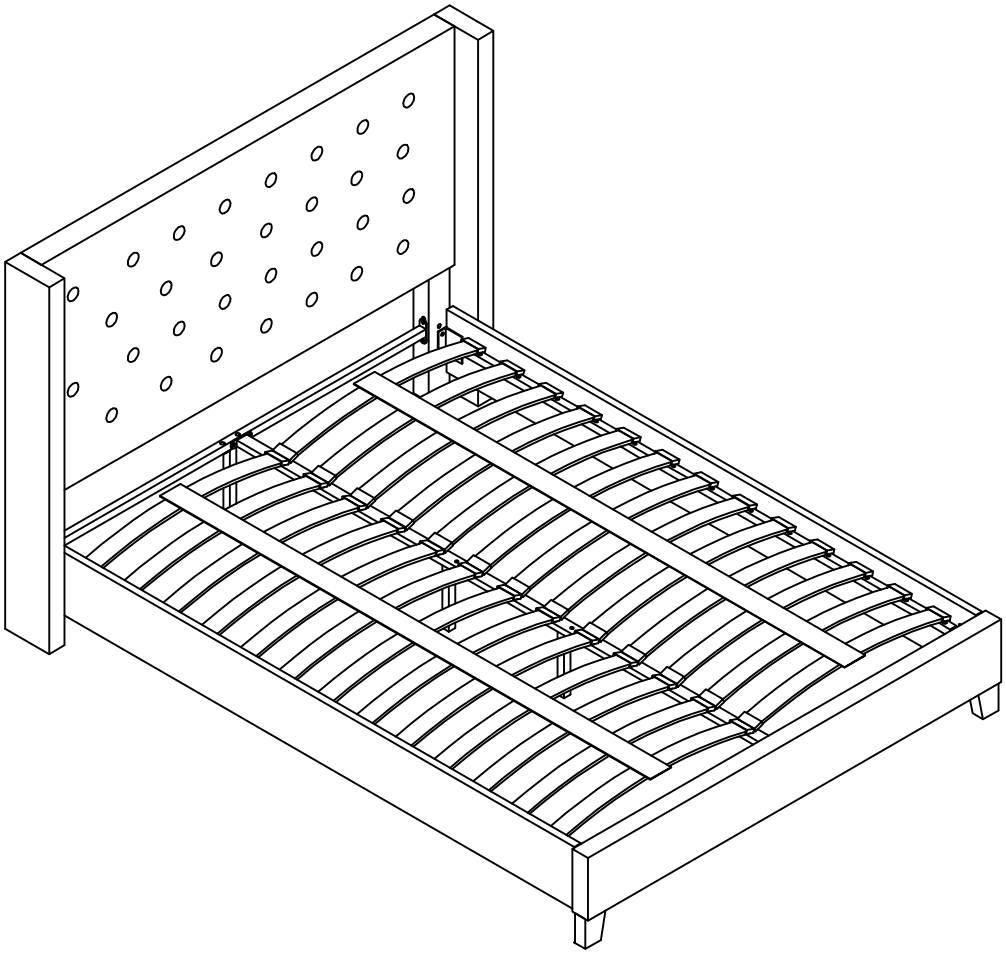
STEP 9