ASSEMBLY INSTRUCTION

STEP1

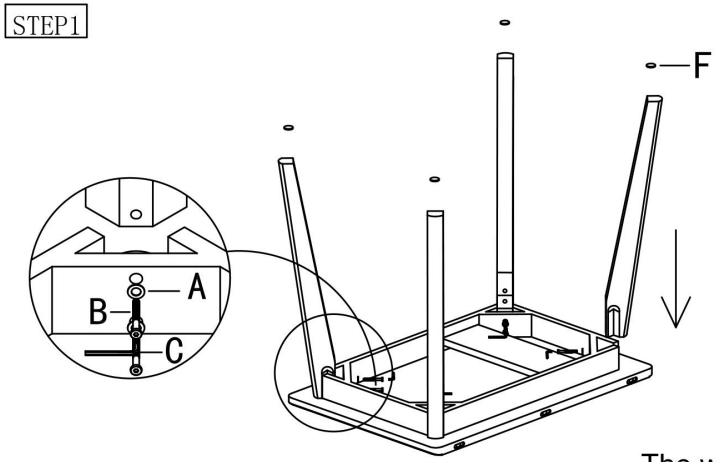

STEP2

The wrong way of use can damage the product

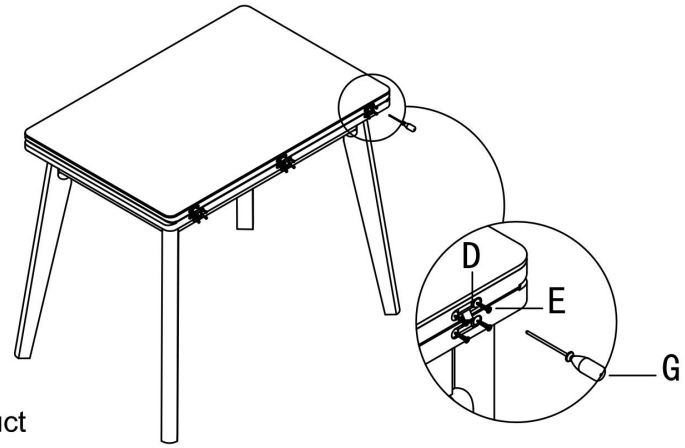

STEP3

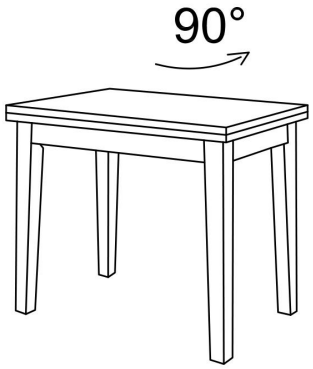

Rotate 90 degrees as shown to open the desktop

STEP4

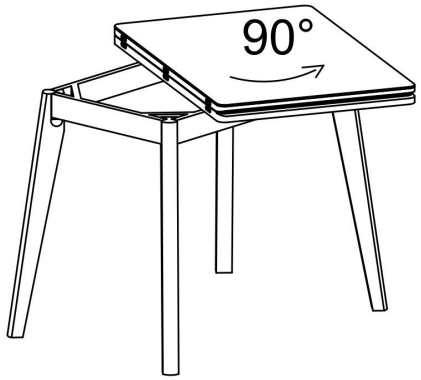

STEP5

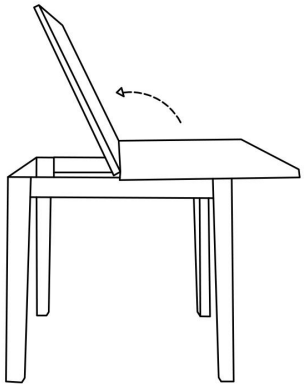

A 8pcs	B 8pcs	C 1pcs	D 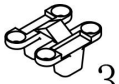 3pcs	E 12pcs	F 4pc	G 1pc