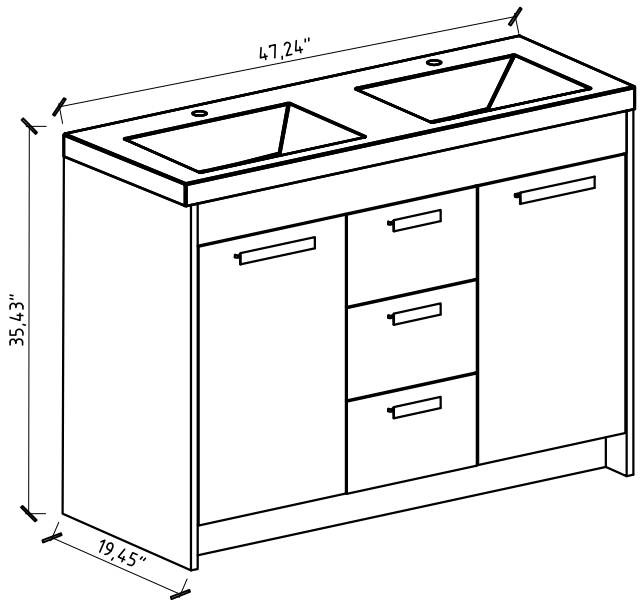
47,24"
35,43"
19,45"

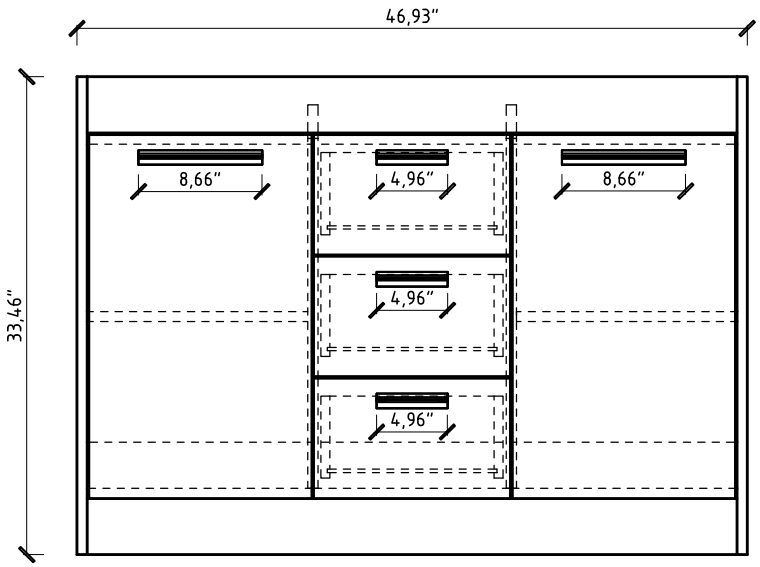
46,93"
33,46"
8,66"
4,96"
8,66"
4,96"
4,96"

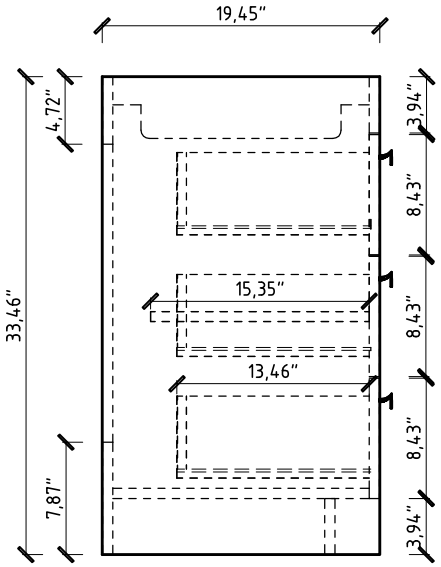
19,45"
33,46"
4,72"
7,87"
3,94"
8,43"
8,43"
8,43"
3,94"
15,35"
13,46"

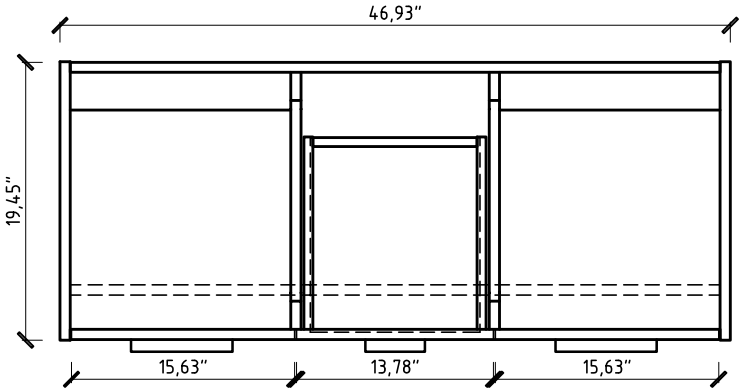
46,93"
19,45"
15,63"
13,78"
15,63"

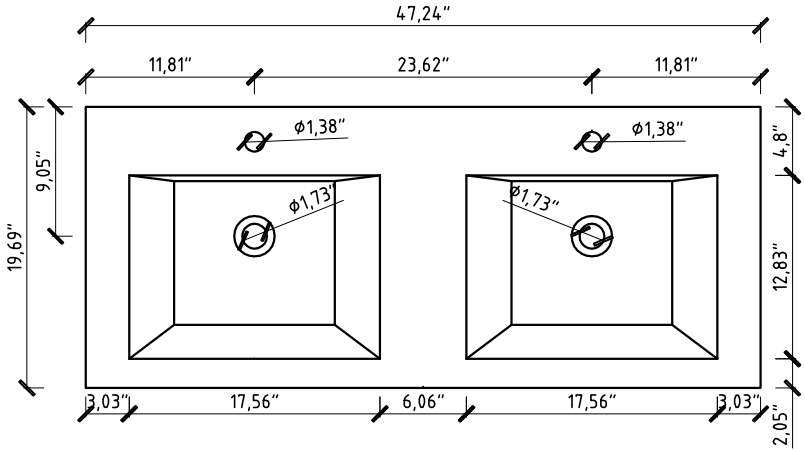
47,24"
11,81"
23,62"
11,81"
Ø1,38"
Ø1,38"
Ø1,73"
Ø1,73"
19,69"
9,05"
4,8"
12,83"
2,05"
3,03"
17,56"
6,06"
17,56"
3,03"

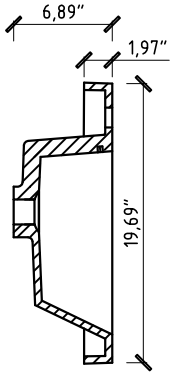
6,89"
1,97"
19,69"