品牌

Electactic

产品类别

饮水制冰机

包材类别

说明书

产品型号

HZBY-15A
WD5815A-BLACK

设计师

罗子滢

日期

20260526

更新履历

技术要求:
1. 颜色：单黑印刷
2. 尺寸：A5
此页为技术页，第二页开始印刷制作。

ICE MAKER WITH WATER DISPENSER

USER MANUAL

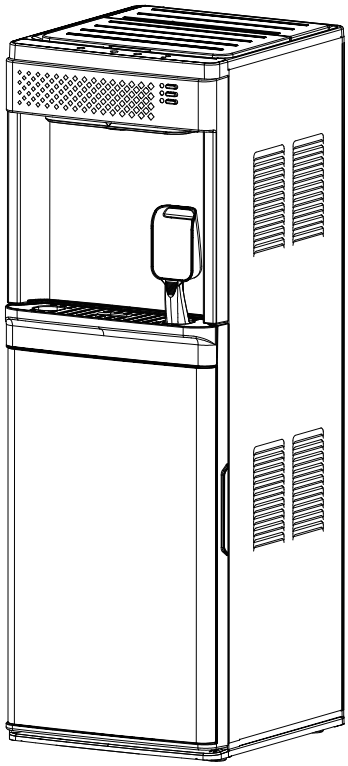

Model No.: HZBY-15A

Please read this user manual carefully before operating the unit.

Scan the QR code to watch the product videos

Web: www.electacticshop.com

Email: service@electacticshop.com

Tel: 888-698-2504

CONTENTS

SAFETY PRECAUTIONS 1

KNOWING YOUR UNIT 3

BEFORE THE FIRST USE 4

OPERATING INSTRUCTIONS 5

CLEANING AND MAINTENANCE 8

TROUBLESHOOTING 9

SAFETY PRECAUTIONS

When using electrical appliances, basic safety precautions should be followed to reduce the risk of fire, electric shock, and injury to persons or property. Read all instructions before using this appliance.

● Do not operate this or any other appliance with a damaged cord. Connect only to properly polarized outlets. Do not plug any other appliance into the same outlet. Ensure the plug is fully inserted into the outlet.
● Do not route the power cord over carpeting or other heat-insulating materials. Do not cover the cord. Keep the cord away from high-traffic areas and do not submerge it in water.
● The use of an extension cord is not recommended, as it may overheat and present a fire hazard. If an extension cord must be used, its marked rating must be equal to or greater than the rating of this appliance.
● If the unit is brought indoors from outdoors during cold weather, allow it to warm to room temperature for several hours before plugging it in.
● Do not allow hot water to contact bare skin. Exercise caution and supervise closely when the appliance is used near children.
● Do not use this unit outdoors.
● Place the unit on a level, flat surface to avoid hazards caused by instability.
● Position the unit away from direct sunlight.
● Do not tip or overturn the unit.
● Use only potable water to make ice cubes or dispense cold beverages; do not use any other liquids.
● Always turn off and unplug the unit when the water bottle is empty or when replacing the bottle.
● Unplug the unit before cleaning, performing maintenance, or servicing.
● Do not clean the unit with flammable liquids. Fumes from these liquids may create a fire hazard or risk of explosion.
● Disconnect the mains plug from the wall socket when the appliance is not in use, or when traveling or on holiday, where the appliance is connected via a mains plug.
● **WARNING:** This appliance must be grounded.
● **IMPORTANT:** The wires in the mains lead are colored according to the following code:
Green or Green with a Yellow stripe: Ground
White: Neutral
Black: Live
WARNING: Fill with potable water only.

KNOWING YOUR UNIT

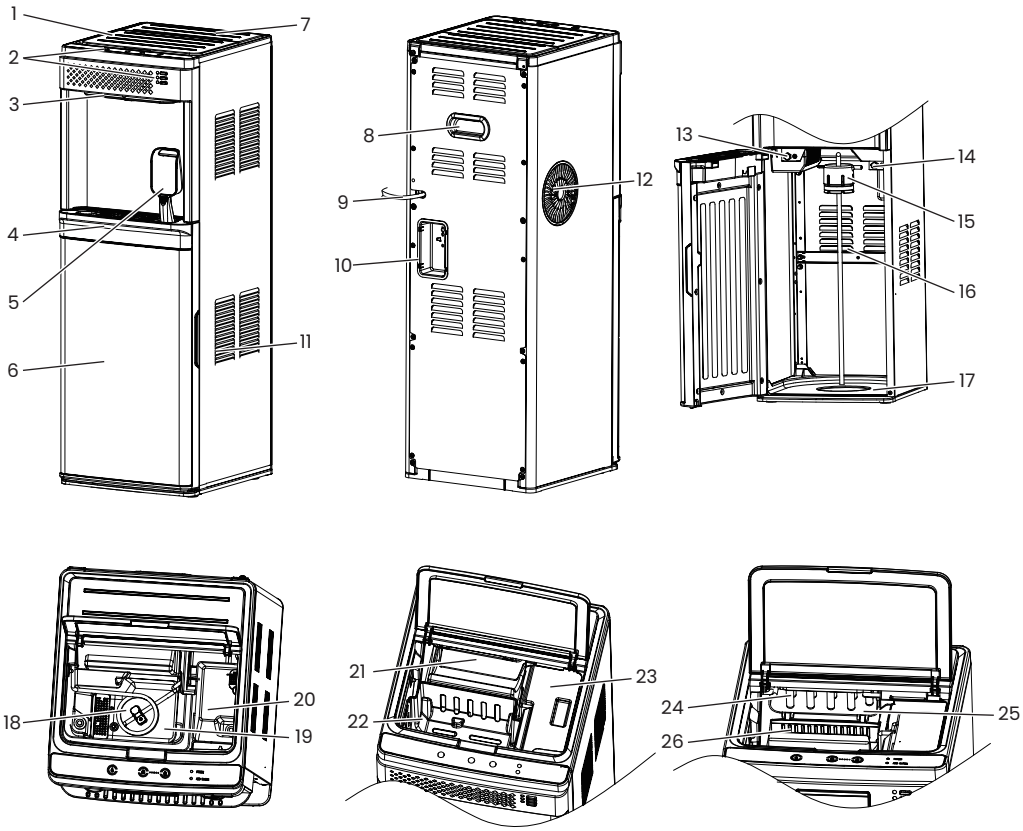

1. Front Upper Cover
2. Control Panel
3. Water Outlet
4. Detachable Water Tray
5. Ice Scoop
6. Front Door
7. Rear Upper Cover
8. Handle
9. Power Cord
10. Cord & Plug Storage
11. Air Inlet
12. Air Outlet
13. Cold Water Tank Drain Port
14. Ambient Water Tank Drain Port
15. Water Bottle Cover
16. Water Inlet Silicone Hose
17. Base
18. Stainless Steel Evaporator
19. Cold Water Tank
20. Ambient Water Tank
21. Silicone Pad
22. Ice Basket
23. Ambient Water Tank Cover
24. Ice-Making Evaporator
25. Ice-Making Box
26. Ice Shovel

BEFORE THE FIRST USE

1. Unpacking the unit

- When removing the unit from its packaging, do not turn it upside down or lay it on its side.
- Remove all strapping.
- Open the carton.
- Lift the unit straight up from the box.
- Remove the plastic bag.
- Remove the styrofoam packing materials.
- Verify that the water tray and ice scoop are included. If any accessories are missing, please contact customer service.

2. Cleaning

- Wipe the unit clean with a soft cloth before use.

3. Placement

- Set the unit on a hard, level surface. Allow it to sit for 6 hours before use to stabilize the internal components.
- Place the unit in a location with good air circulation. Leave a minimum clearance of 6.3 inches (16 cm) on both sides and between the back of the unit and the wall.
- Avoid direct sunlight, high temperatures, and other heat sources.
- The unit must be positioned so that the power plug remains accessible.

4. Preparing for Use

- Open the front door and tighten the drain nuts securely on the unit's drain ports. The nuts may loosen during shipping, and failure to tighten them can cause water leakage.
- Do not plug in the power cord yet. Read all instructions before proceeding.
- This appliance is for indoor use only. Do not operate it in temperature above 97°F (36°C).

BEFORE THE FIRST USE

5. Water Bottle Installation

● Ensure the unit is unplugged from the electrical outlet.
● Pierce the bottle seal with the water bottle cover as shown in Figure 1. Insert the water inlet silicone hose into the bottle, fit the cover in place, then place the water bottle on the base as shown in Figure 2.

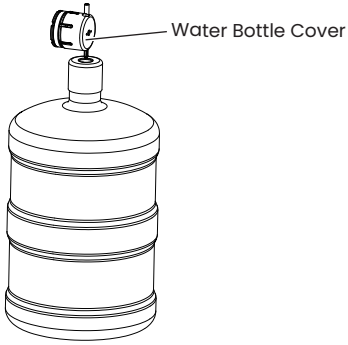

Figure 1

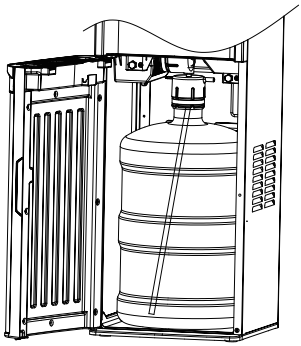

Figure 2

6. Cold Weather Use

● If the unit has been exposed to low temperatures during transportation or storage, let it stand at room temperature for several hours before plugging in.

7. Electrical Safety

● Improper use of the grounded plug may result in electrical shock. If the power cord is damaged, contact customer service.
● **DANGER:** This appliance must be properly grounded. It is equipped with a three-prong plug for use with a standard grounded outlet. Do not cut or remove the ground prong under any circumstances.
● Plug the unit into a dedicated, properly installed, grounded 110-115V, 60Hz outlet. Contact a certified electrician with any questions about grounding.

8. Powering On

● Once the above steps are complete, plug the unit into the wall outlet. The power indicator on the control panel will illuminate. You may now operate the hot water, cold water, and ice-making functions as desired.

OPERATING INSTRUCTIONS

Control Panel

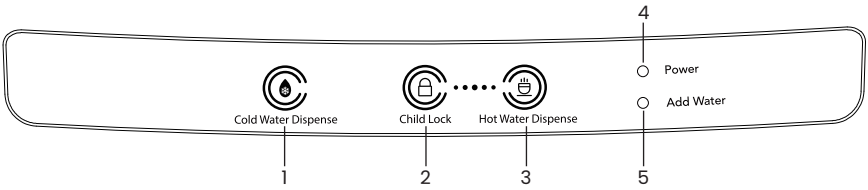

1 Cold Water Dispense Button
2 Child Lock Button
3 Hot Water Dispense Button
4 Power Indicator
5 Water Shortage Indicator

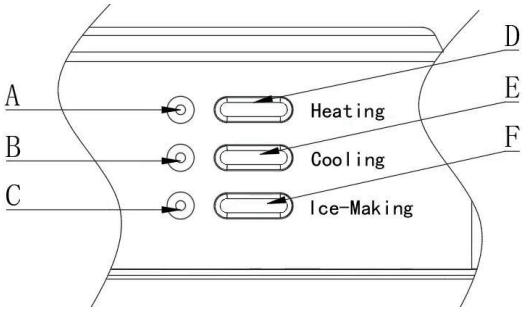

A Heating Indicator
B Cooling Indicator
C Ice-Making Indicator
D Heating Button
E Cooling Button
F Ice-Making Button

OPERATING INSTRUCTIONS

Hot Water Operation
1. Press the heating button. The corresponding white heating indicator will light up, and the heating function will start.
2. Heating typically takes about 15 minutes (time varies based on inlet water temperature).
3. When the heating indicator switches to solid green, the water has reached the set temperature (185–203°F).

Cold Water Operation
1. Press the cooling button. The corresponding white cooling indicator will light up, and the cooling function will start.
2. Cooling typically takes about 20 minutes (time varies based on inlet water and ambient temperatures).
3. When the cooling indicator switches to solid green, the water has reached the set temperature (≤47°F).

Ice-Making Operation
1. Press the ice-making button. The corresponding white ice-making indicator will light up, and the ice-making function will start.
2. Ice-making typically takes about 7 minutes per cycle (time varies based on inlet water and ambient temperatures).
3. When the ice-making indicator switches to solid green, the ice basket is full. Remove the ice cubes and restart the ice-making process.

Removing Ice
Open the front cover.
Use the ice scoop to remove ice cubes and place them in your container.
Close the front cover after removing the ice.

Simultaneous Cold Water & Ice-Making Operation
1. Press the cooling and ice-making buttons. Both corresponding indicators will light up.
2. Ice-making will run with priority. After the ice-making cycle completes, the unit will resume cooling if the water has not yet reached the set temperature.

OPERATING INSTRUCTIONS

Child Lock Function
1. The child lock function disables hot water dispensing to prevent scalding and unintended operation.
2. The child lock will activate automatically once the unit is plugged in, and the child lock button will illuminate.
3. Press the child lock button to unlock, and the button will turn off. If no button is pressed within 3 seconds after unlocking, the unit will automatically lock again.

Dispensing Hot Water
1. Press the child lock button and the child lock button will turn off.
2. Within 3 seconds, press the hot water dispense button. The button will stay on, and the outlet will dispense hot water for approximately 2 minutes.
3. To stop dispensing early, press the hot water dispense button again. The supply will stop, and the button will turn off.

Dispensing Cold Water
1. Press the cold water dispense button. The button will stay on, and the outlet will dispense cold water for approximately 2 minutes.
2. To stop dispensing early, press the cold water dispense button again. The supply will stop, and the button will turn off.

Water Shortage Reminder
1. When water is insufficient, the water shortage indicator will flash red.
2. The heating, cooling, and ice-making functions will automatically stop.
3. Refill or replace the water bottle to resume operation.

CLEANING AND MAINTENANCE

Cleaning

Before using your unit or after three months of use, thoroughly clean the appliance as follows:

1. Flip up the front upper cover and remove the ice basket.

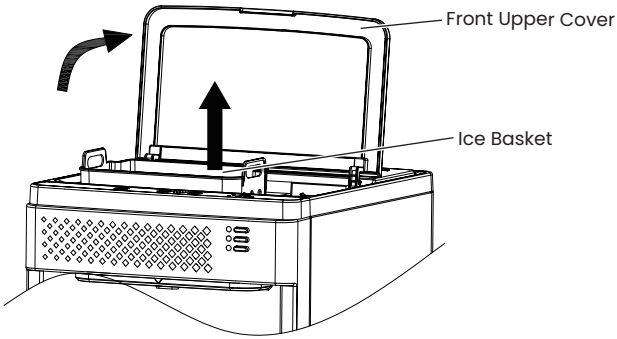

2. Slide the water tank cover toward the center to open it. Then clean the two water tanks with warm water.

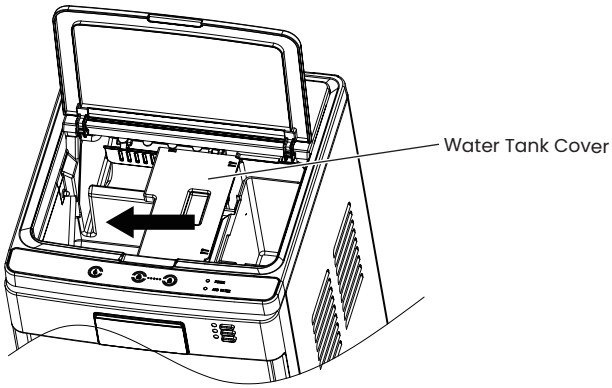

3. Clean all removed accessories with warm water and a soft cloth.
4. Take out the silicone pad, wash it with clean water, dry it with a cloth, then replace it in its original position. The silicone pad helps reduce ice-falling noise.

CLEANING AND MAINTENANCE

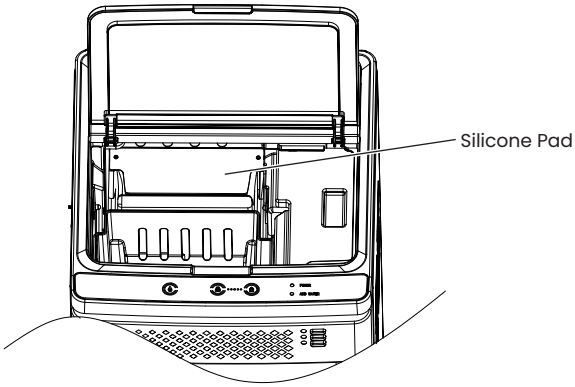

5. Clean the stainless steel evaporator and ice-making evaporator column with water or alcohol.
6. Fill the two water tanks with water. Clean them using a diluted cleaning agent, warm water, and a soft cloth.
7. Open the front door and clean the water inlet silicone hose with water or alcohol. The water inlet silicone hose is non-removable.
8. After cleaning, turn the drain nuts on both drain ports counterclockwise, remove the drain plugs, and drain all water from the tanks. Rinse repeatedly, then reinstall the plugs and nuts.
9. Clean the exterior regularly with mild cleaning agents and warm water.
10. During use, empty and clean the water tray when it is full.

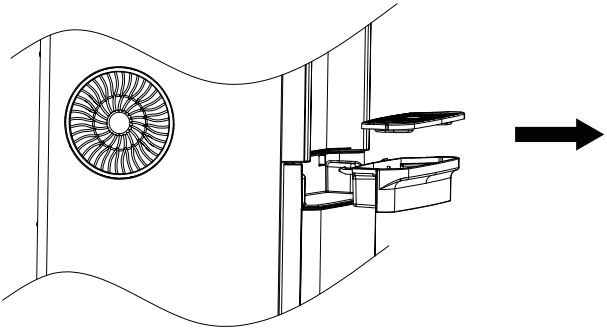

Maintenance

- **Long-term storage:** If the unit will not be used for an extended period, drain all water from the unit and wipe the interior dry.
- **Routine care:** Inspect and clean components regularly to ensure optimal performance and hygiene.

TROUBLESHOOTING

Problem	Possible Cause	Solution
The water shortage indicator flashes red.	Water level is low.	Refill or replace the water bottle.
The ice-making indicator shows a steady green light.	Ice basket is full.	Empty the ice basket.
	Ice full sensor is faulty (light stays on even when empty).	1. Press and hold the ice-making button for more than 5 seconds to force 10 ice-making cycles. 2. If the issue persists, contact customer service to replace the sensor.
The power indicator flashes.	Ice-making mechanism is jammed.	1. If ice is stuck in the ice-making box, carefully remove it. 2. If the problem continues, contact customer service.
Ice cubes stick together.	Ice-making cycle is too long; evaporator is overly submerged in water.	Stop ice-making, allow ice to melt, then restart. Adjust the evaporator position.
	Water temperature in the tank is too low.	Replace the water in the tank. Water temperature should ideally be between 46°F and 90°F.
Ice-making runs but produces no ice.	Ambient or water temperature is too high.	Operate the unit when the ambient temperature is below 90°F. Add cooler water to the tank.
	Refrigerant system leak.	Contact customer service.
	Refrigerant system blockage.	

ROWAN ELECTRIC APPLIANCE LLC

8:30am-5:30pm P.S.T.
Monday to Friday