INSTALLATION INSTRUCTIONS

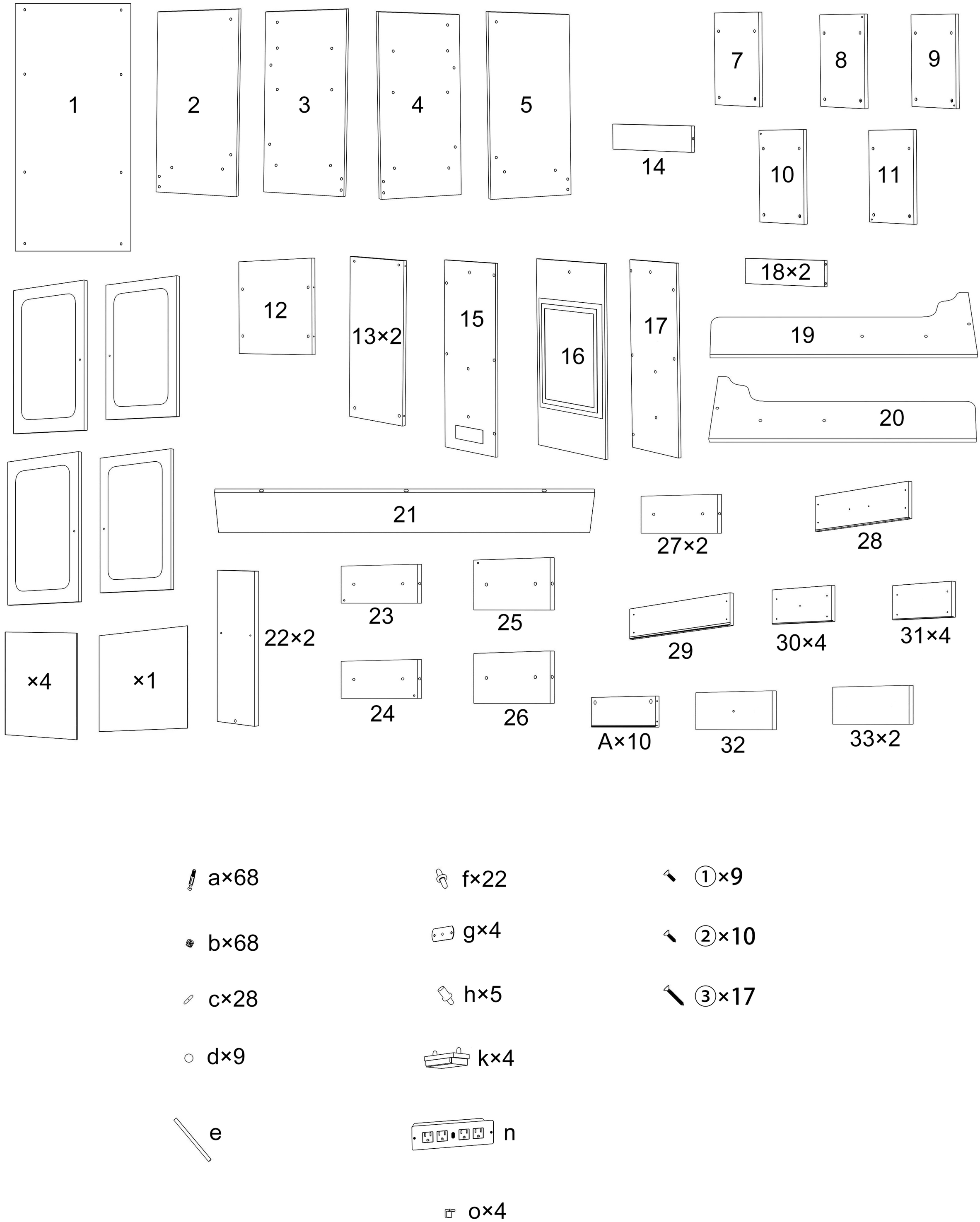

1

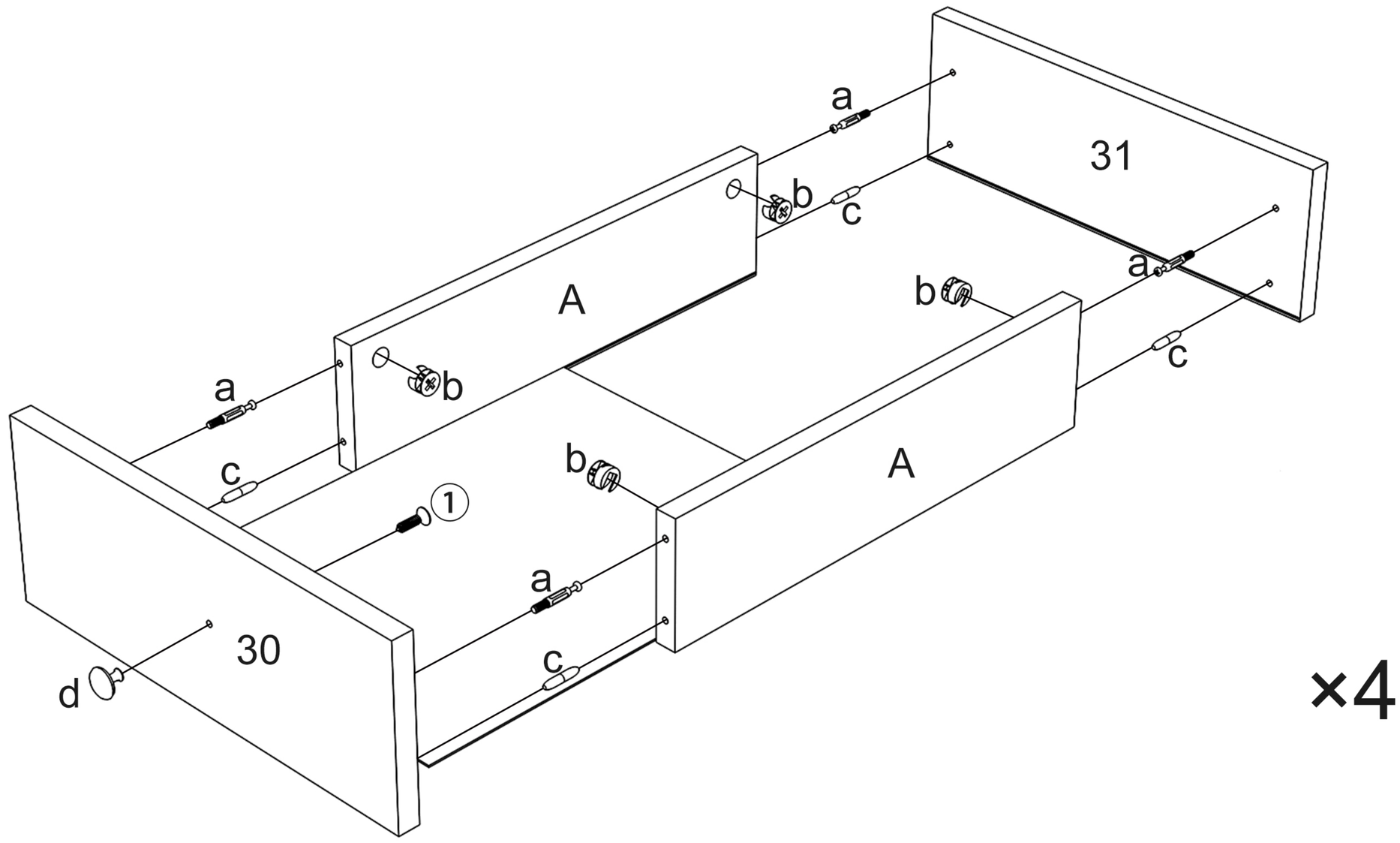
a
31
b
c
A
a
b
b
c
a
b
c
A
1
b
a
30
c
d
×4

2

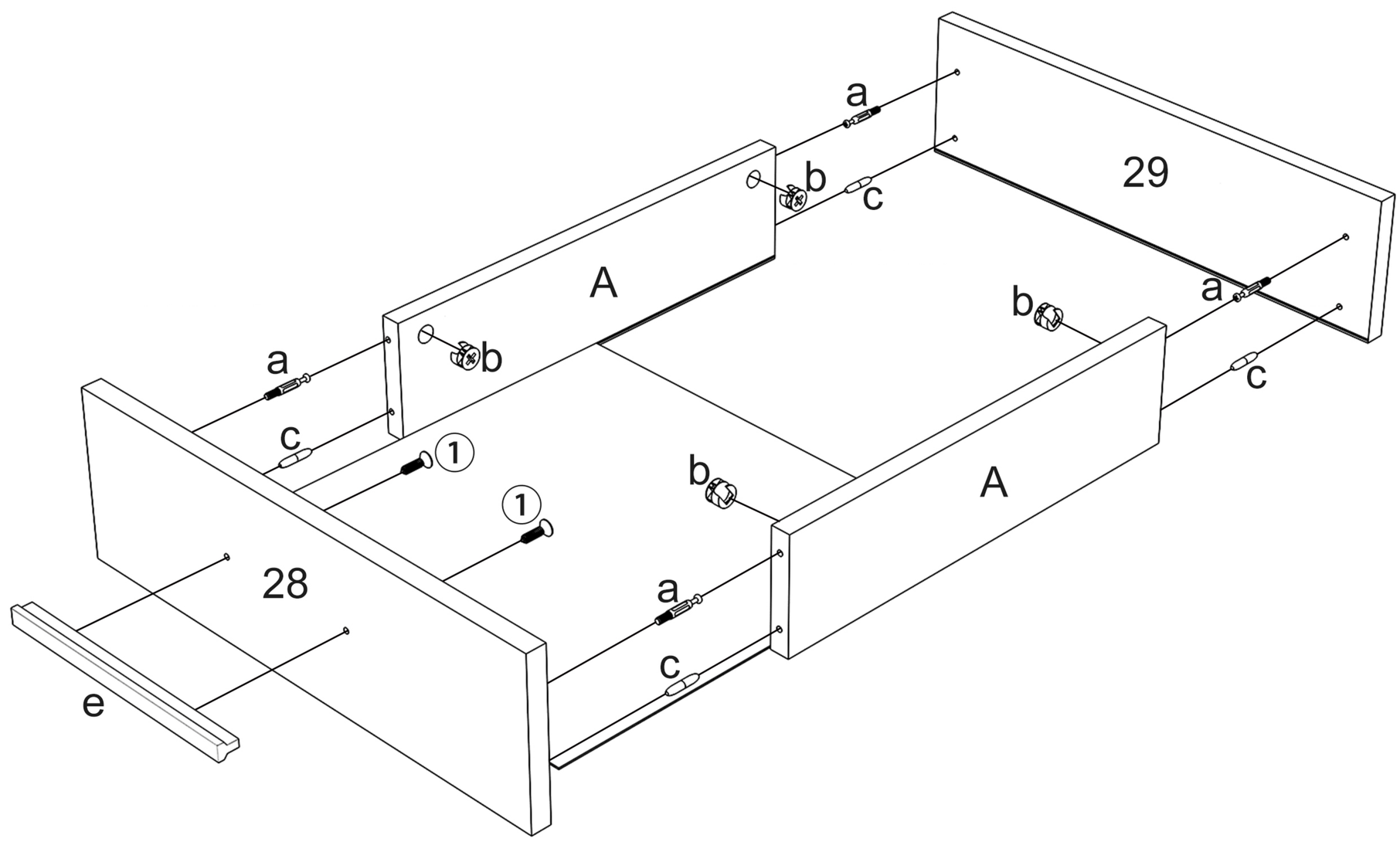
a
29
b
c
A
a
b
b
c
a
c
1
b
A
1
28
a
c
e

3

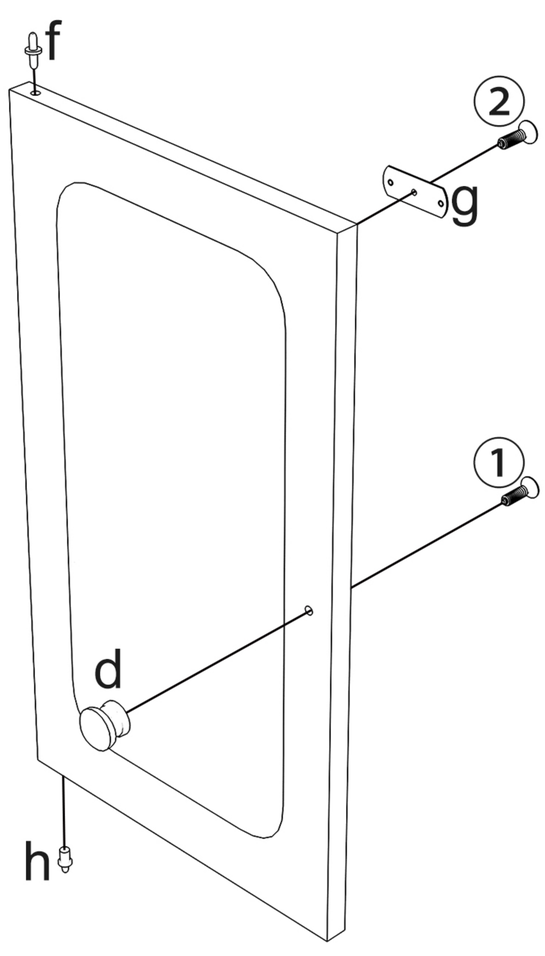
f
2
g
1
d
h

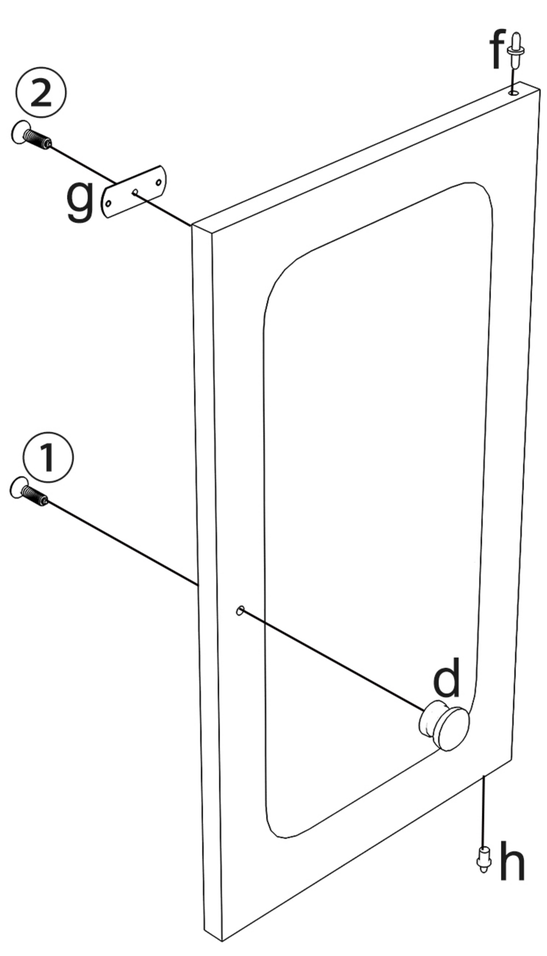
f
2
g
1
d
h

4

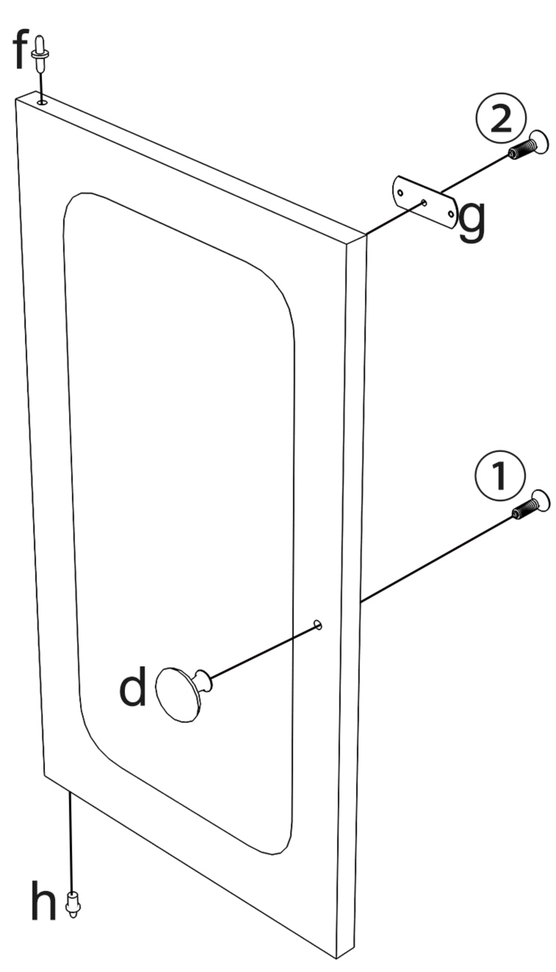
f
2
g
1
d
h

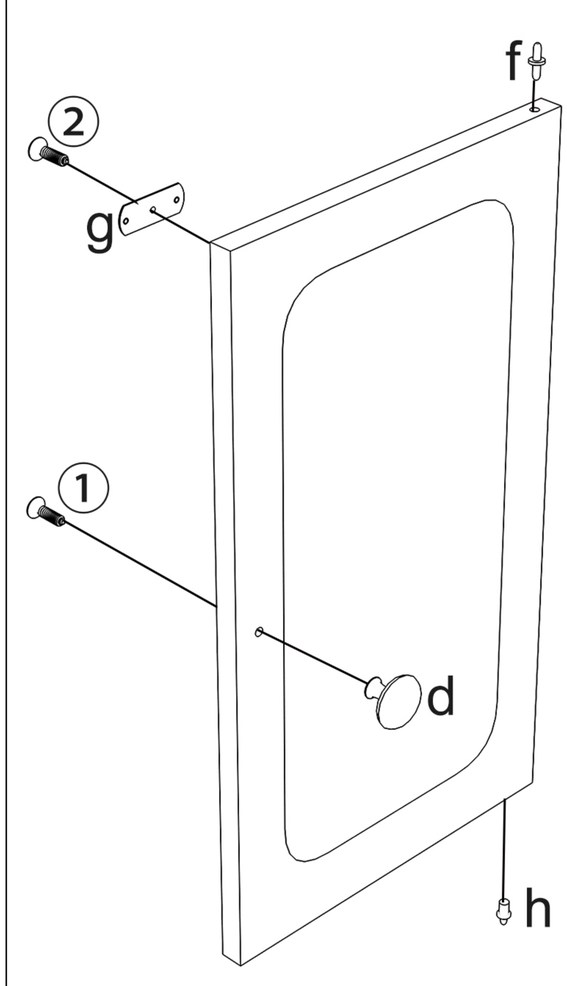
f
2
g
1
d
h

5

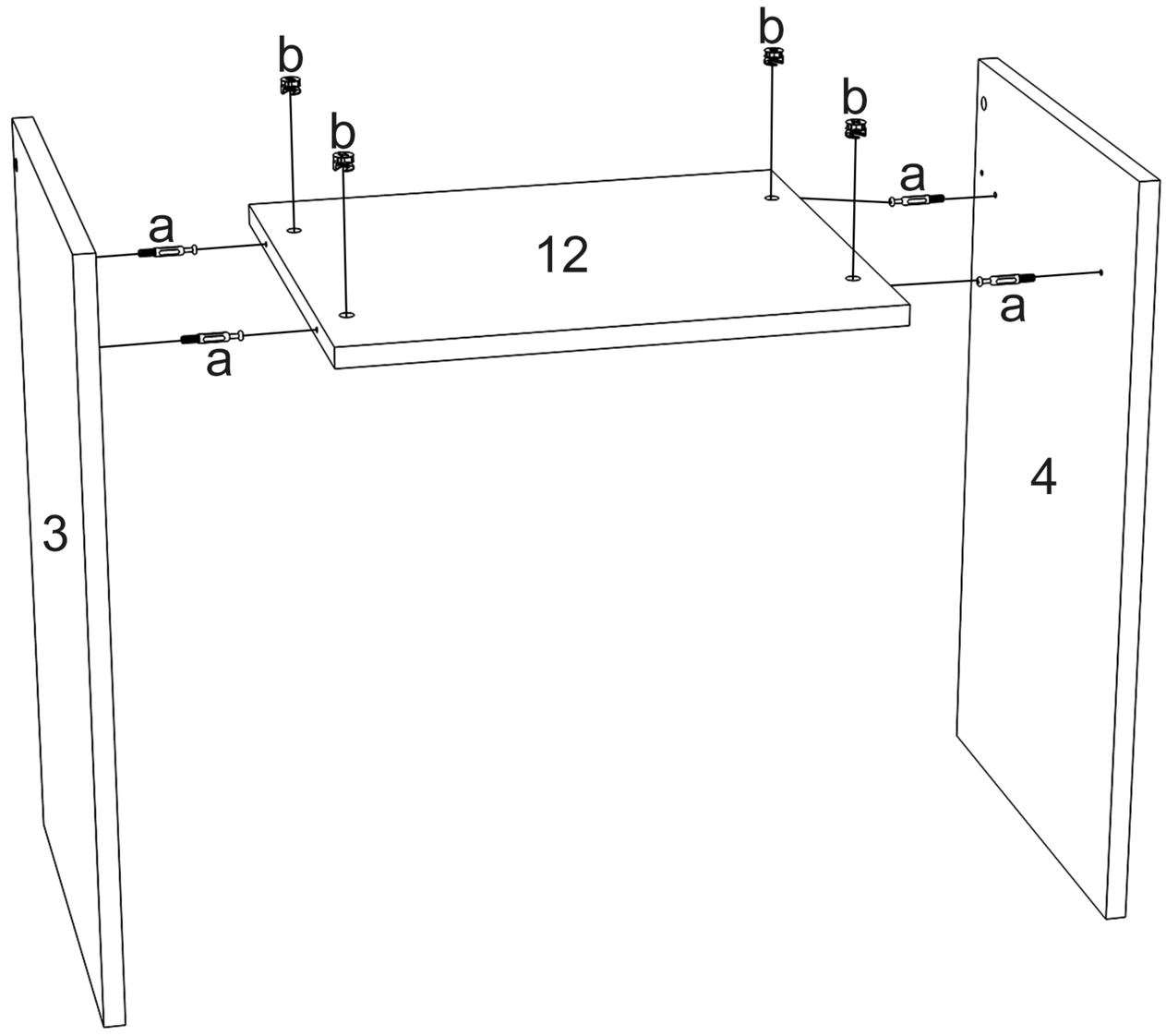

6

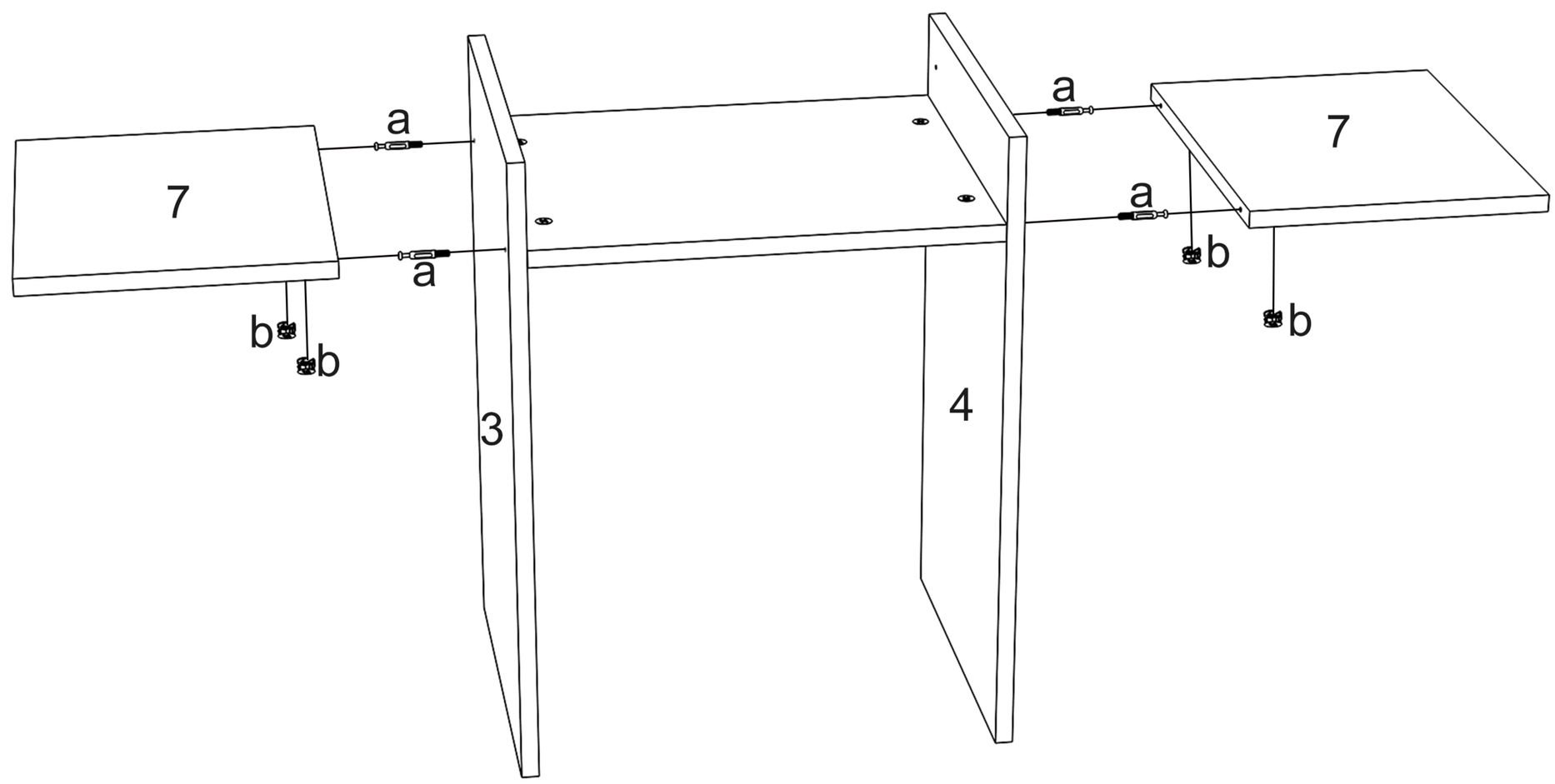

7

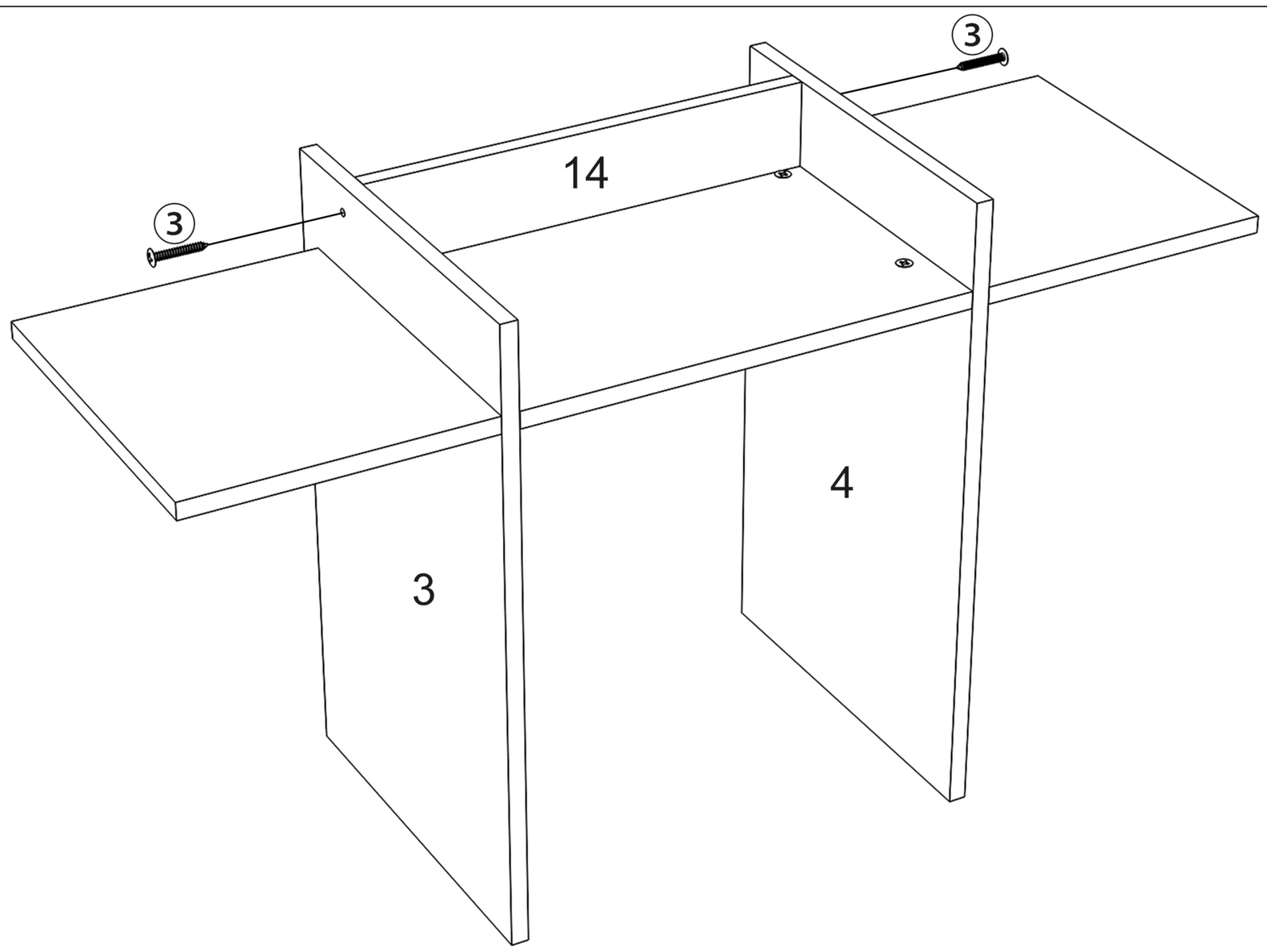

8

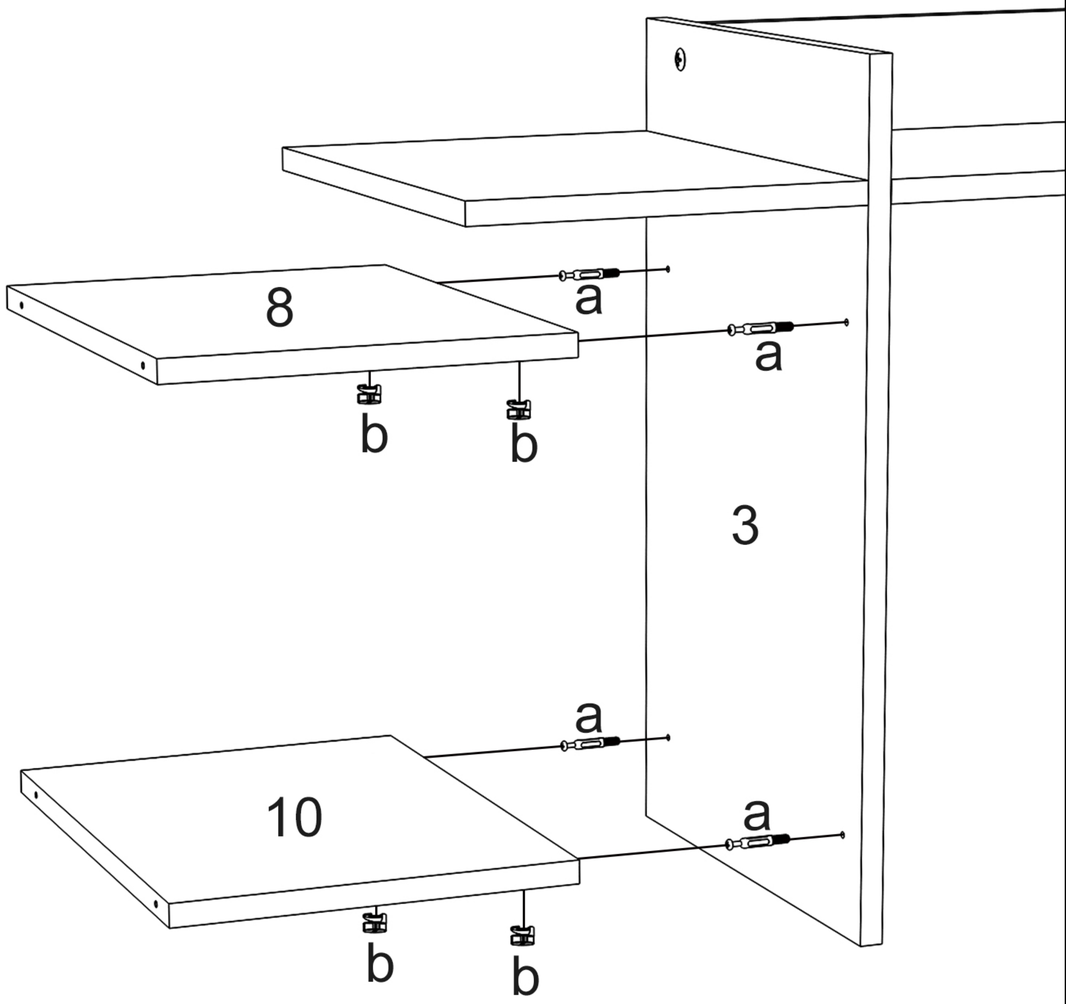

9

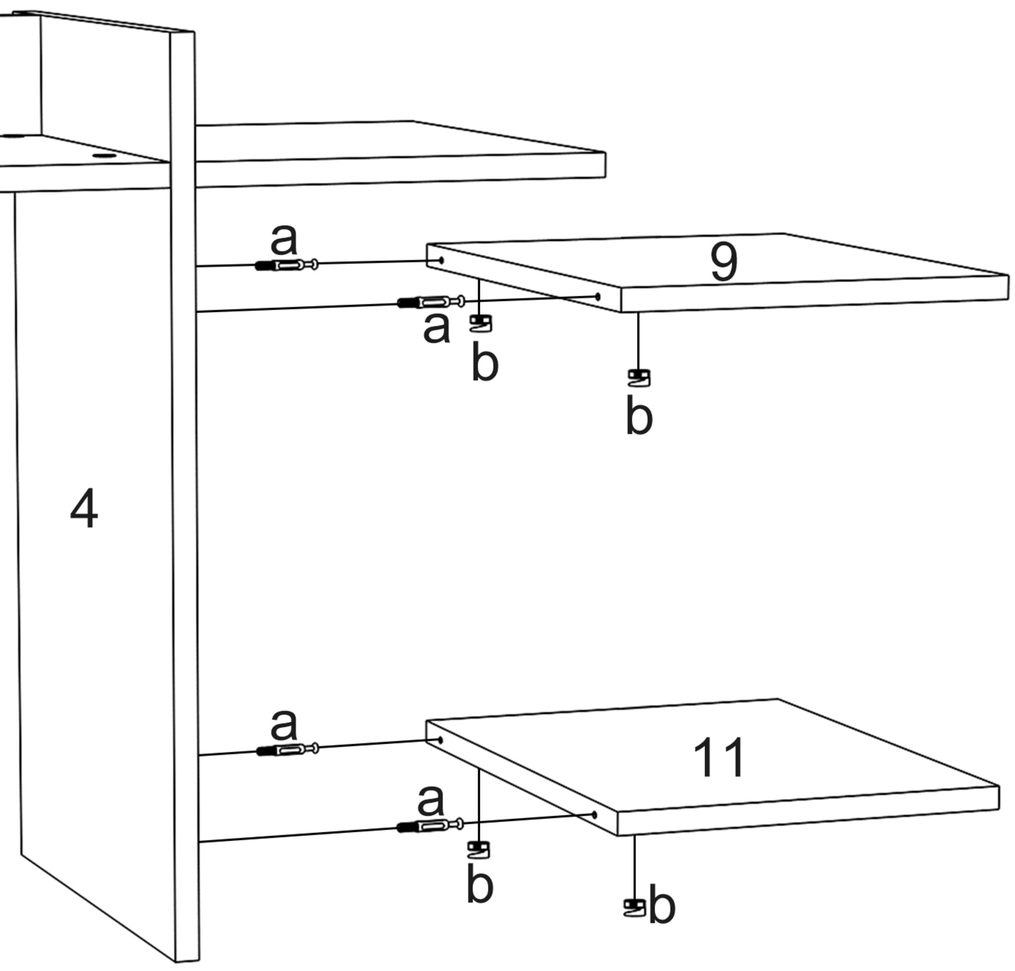

10

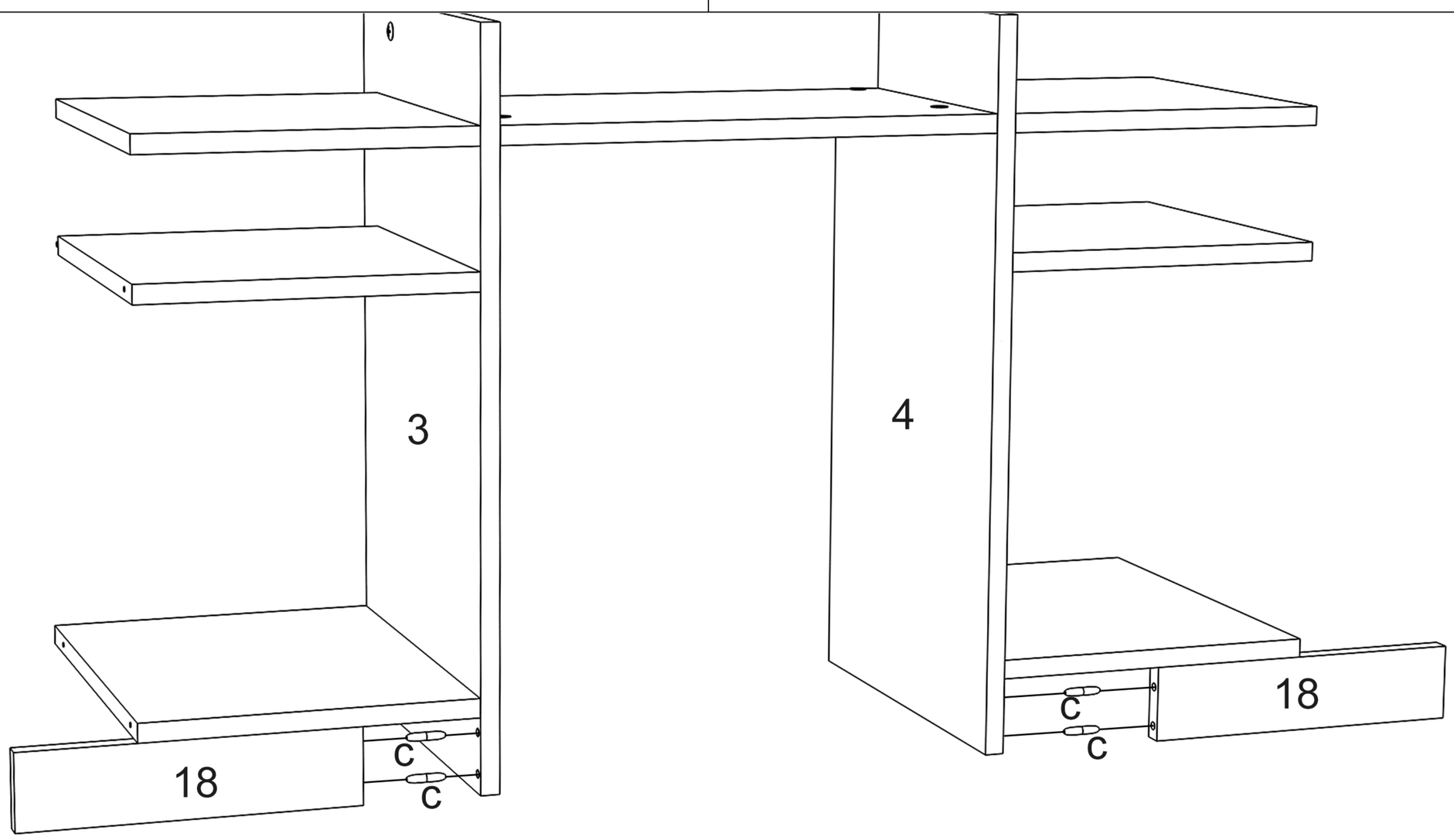

11

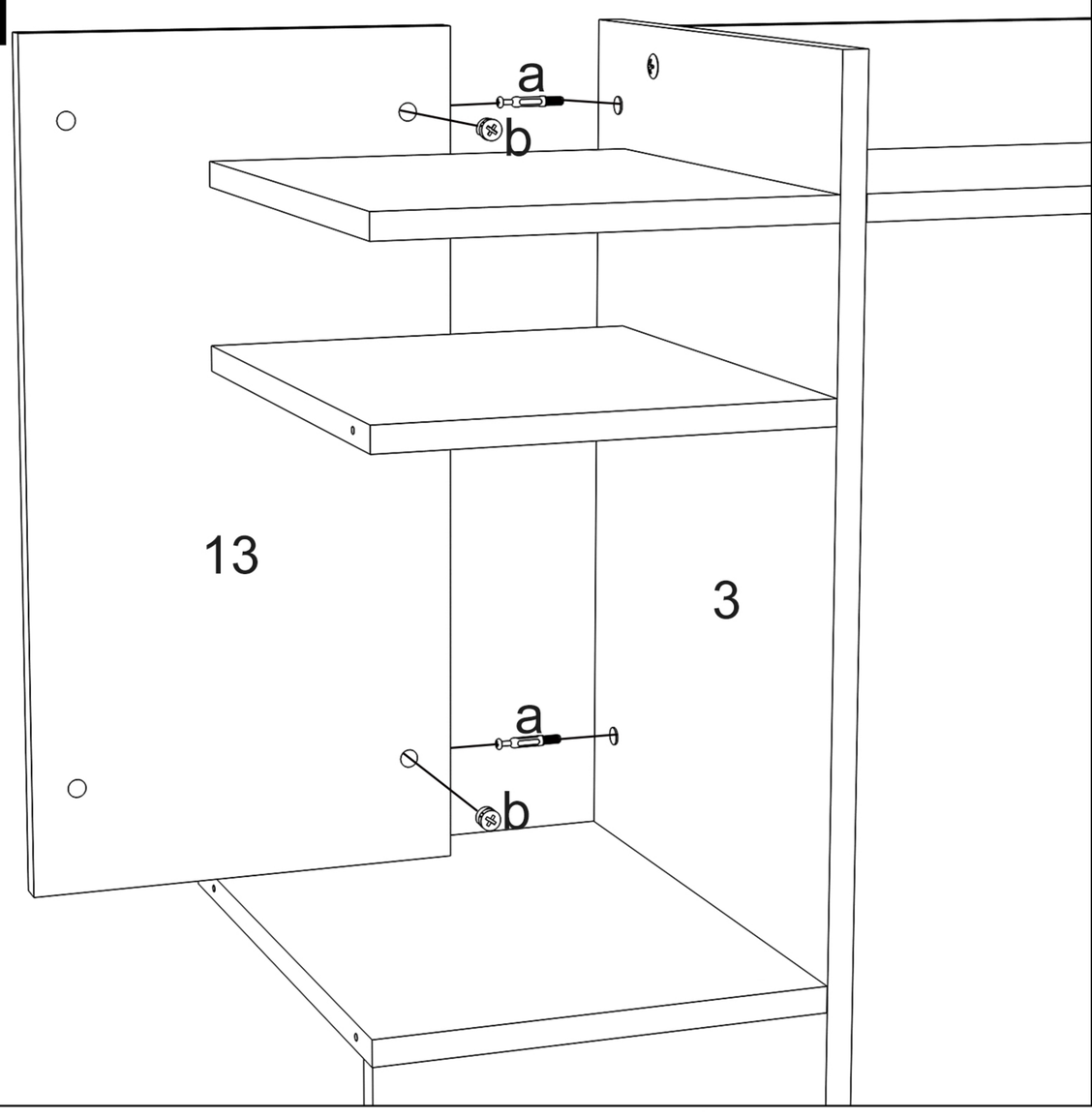

12

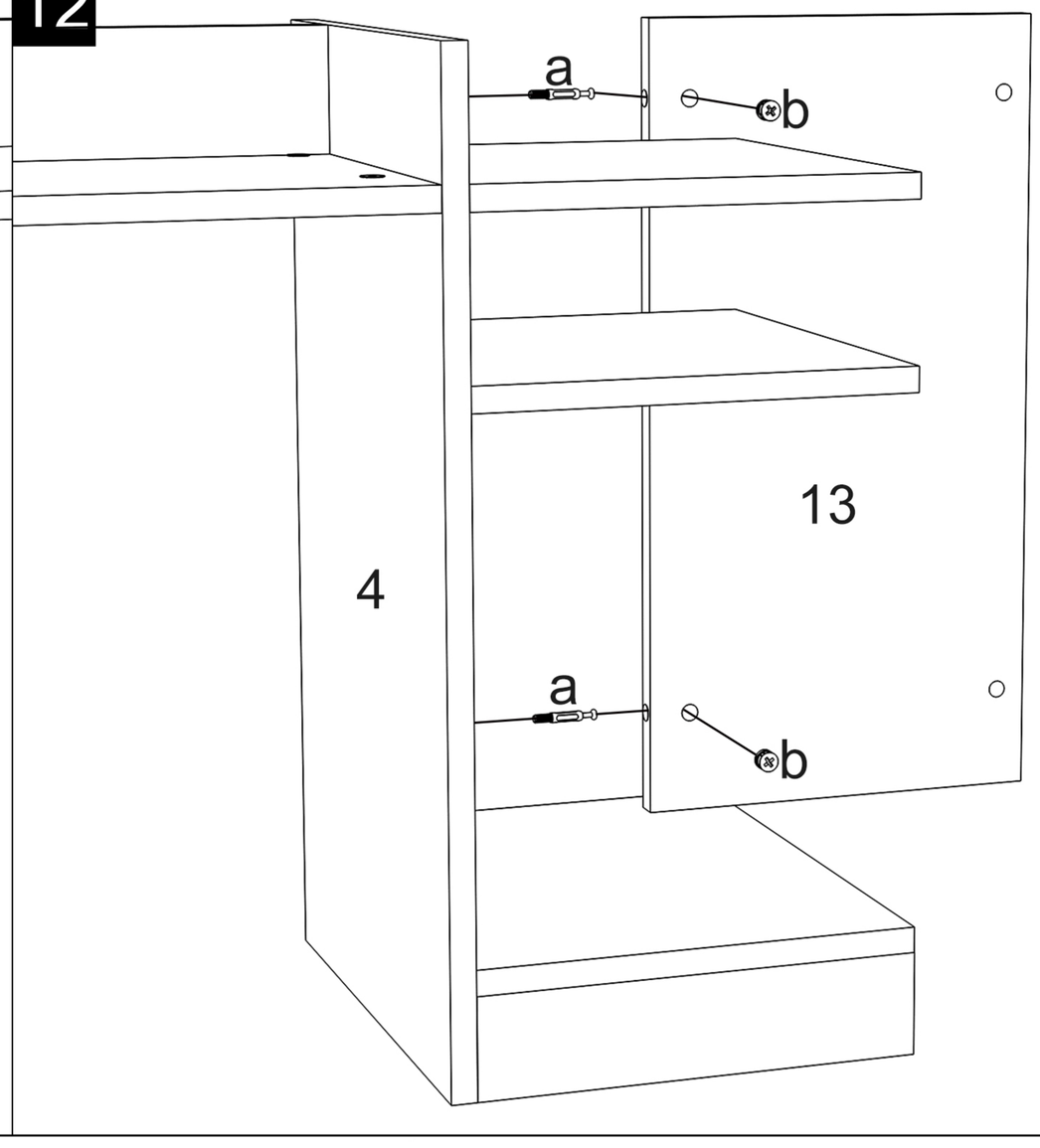

13

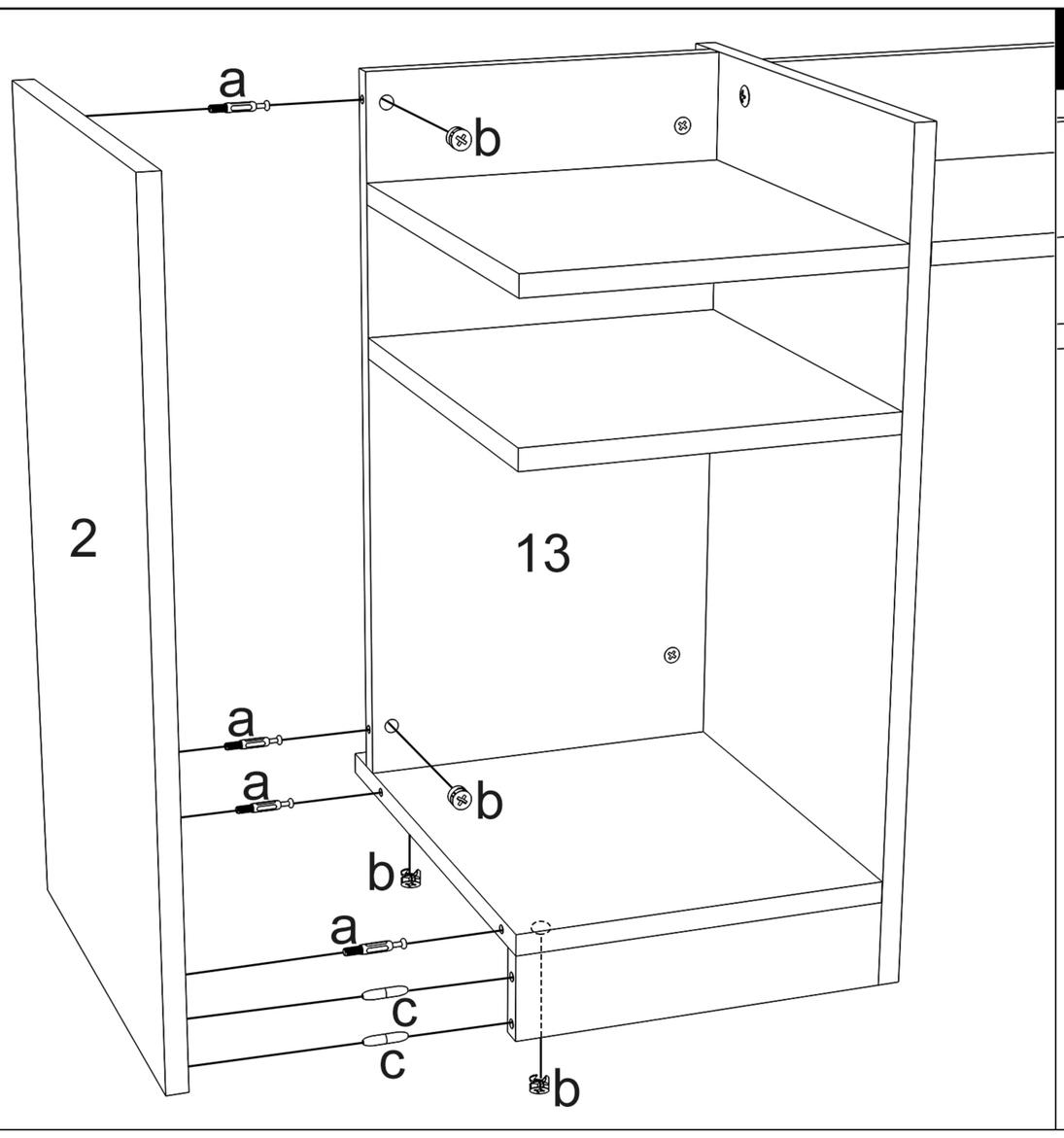

14

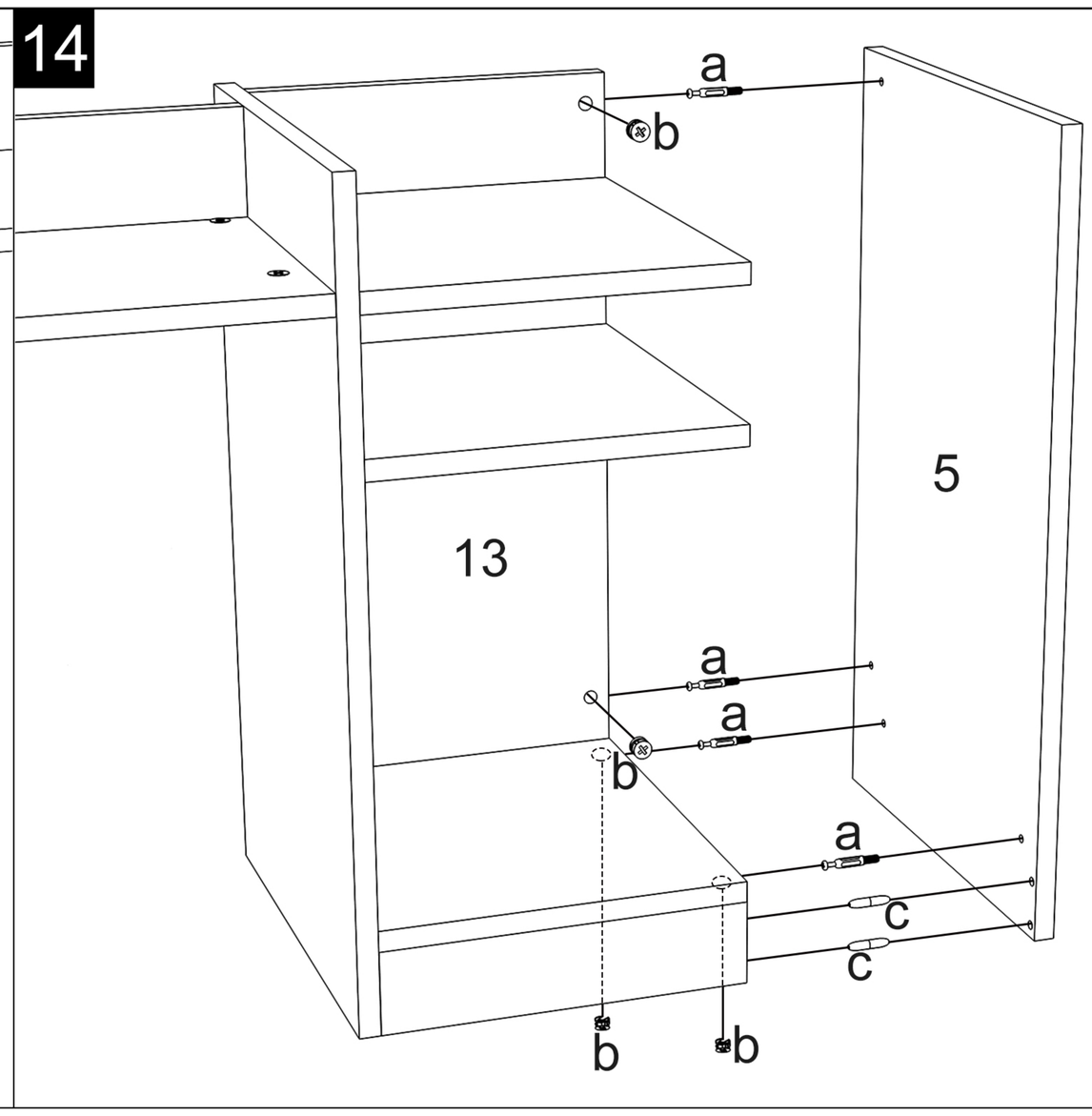

15

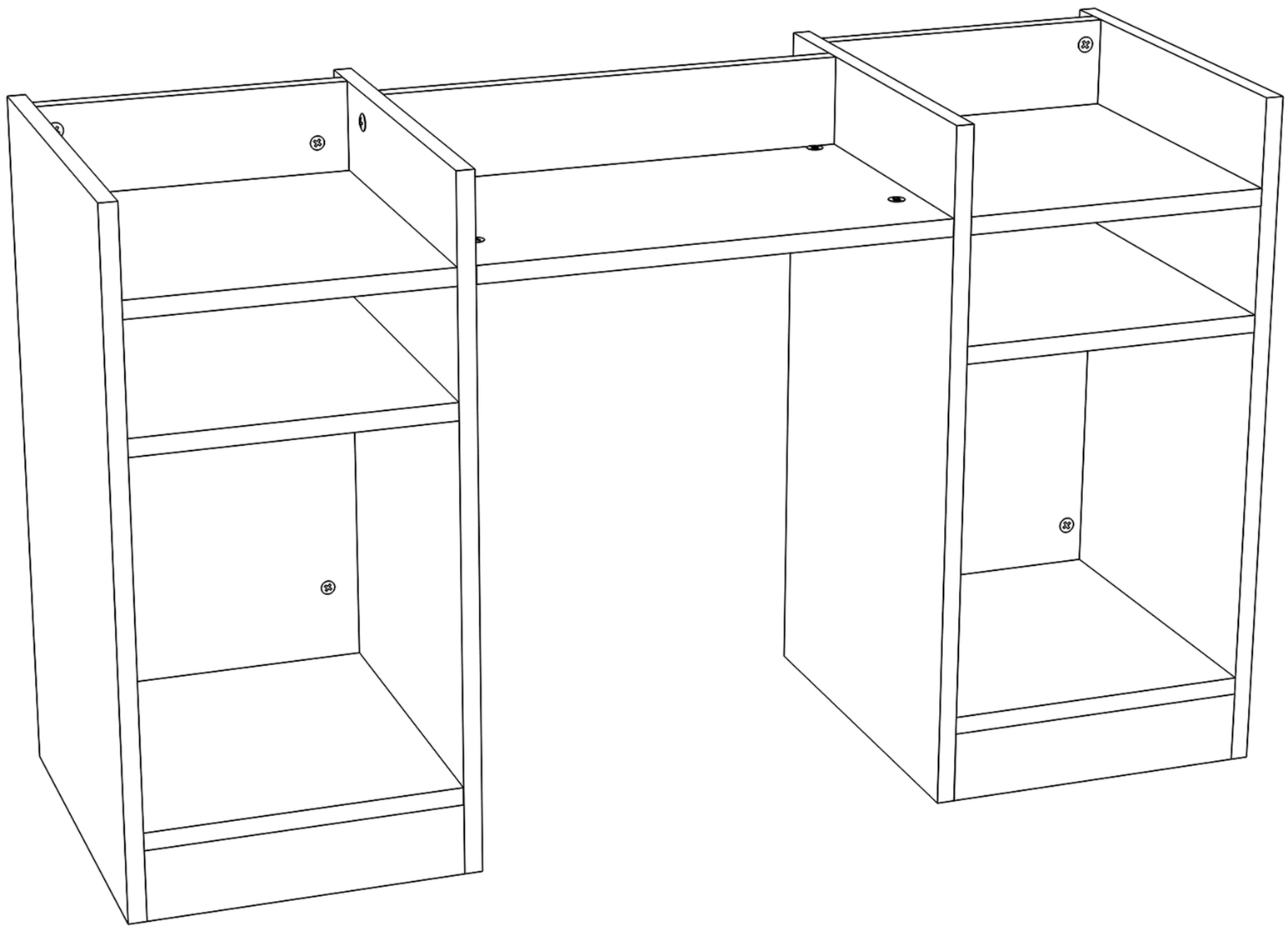

16

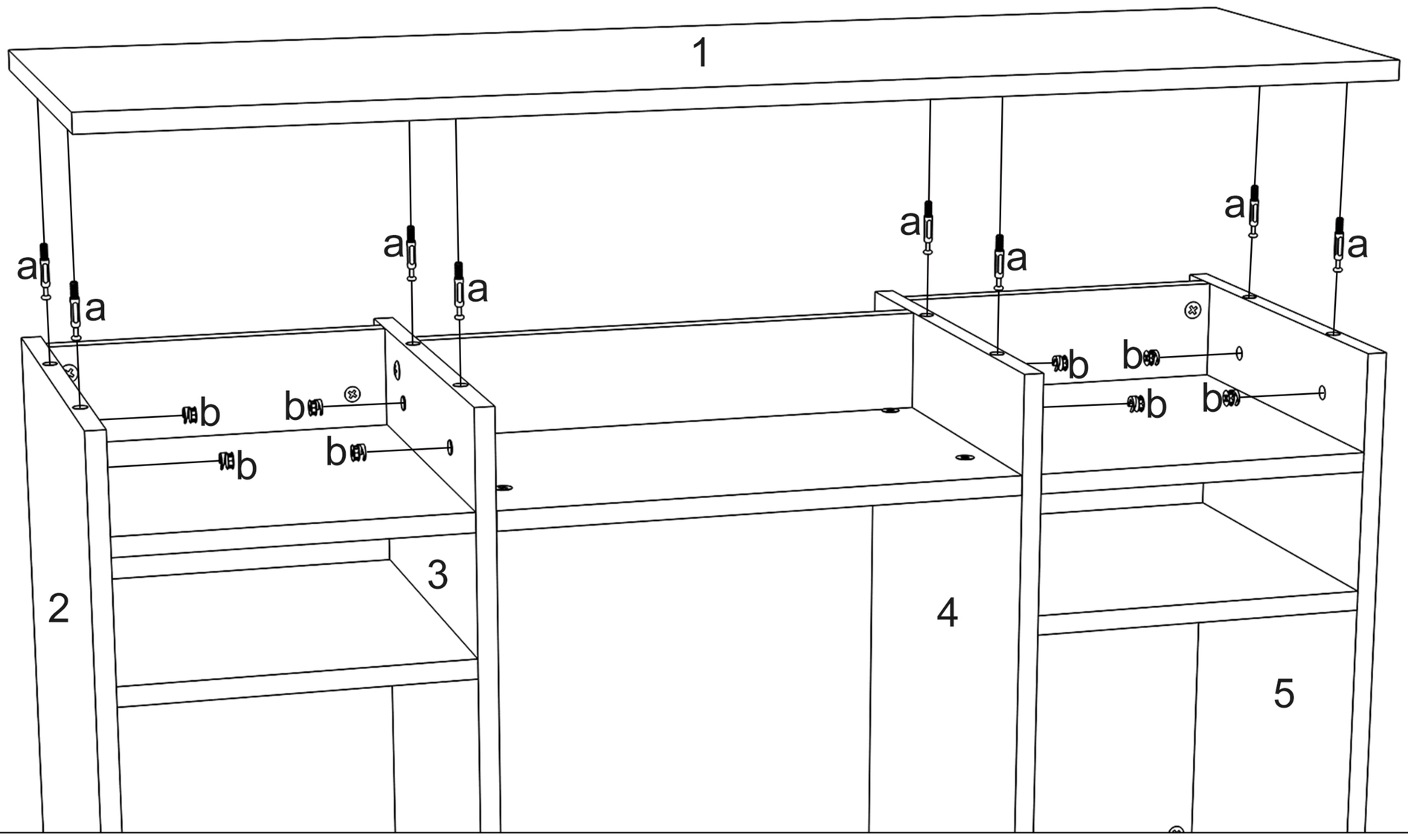

17

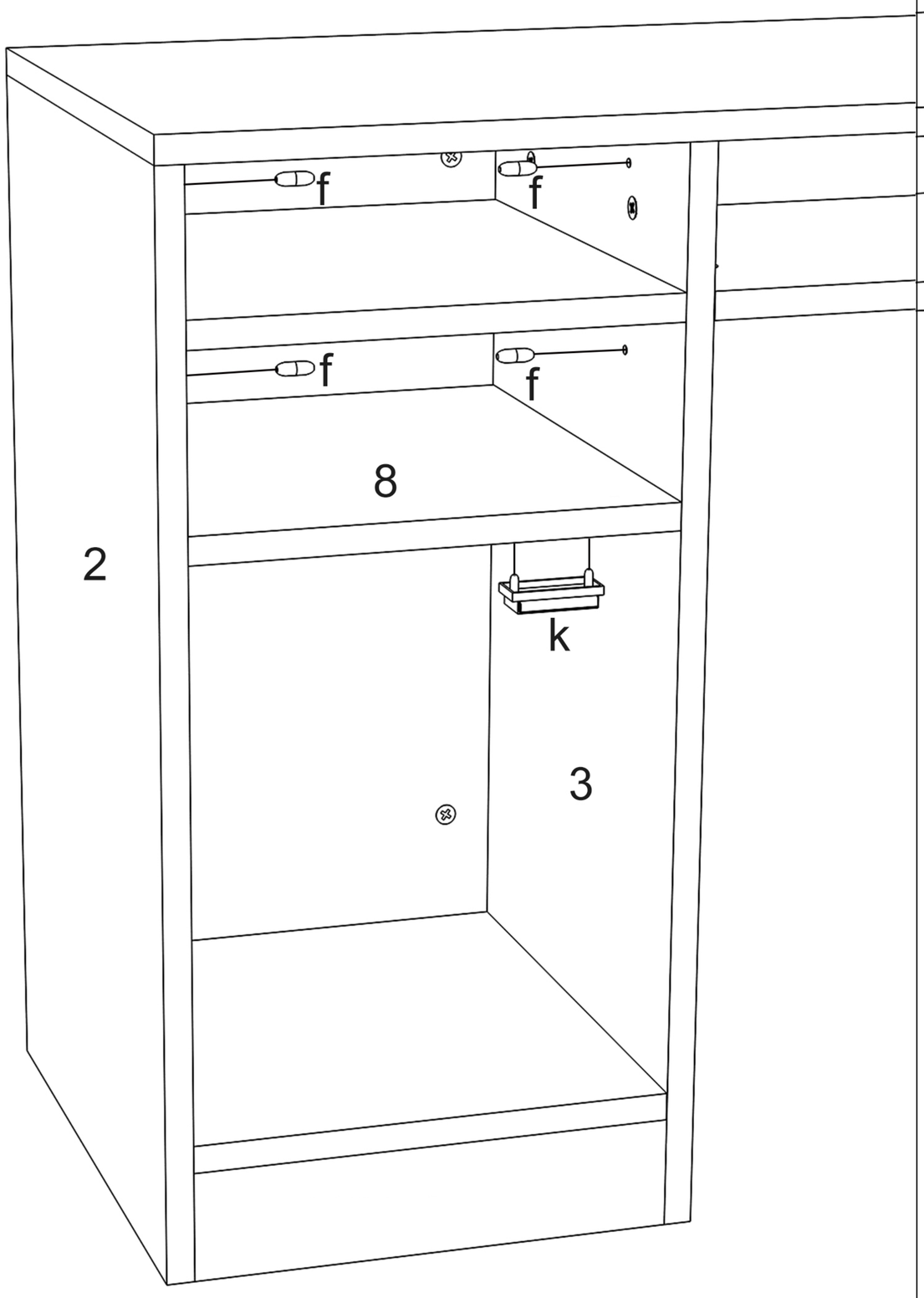

18

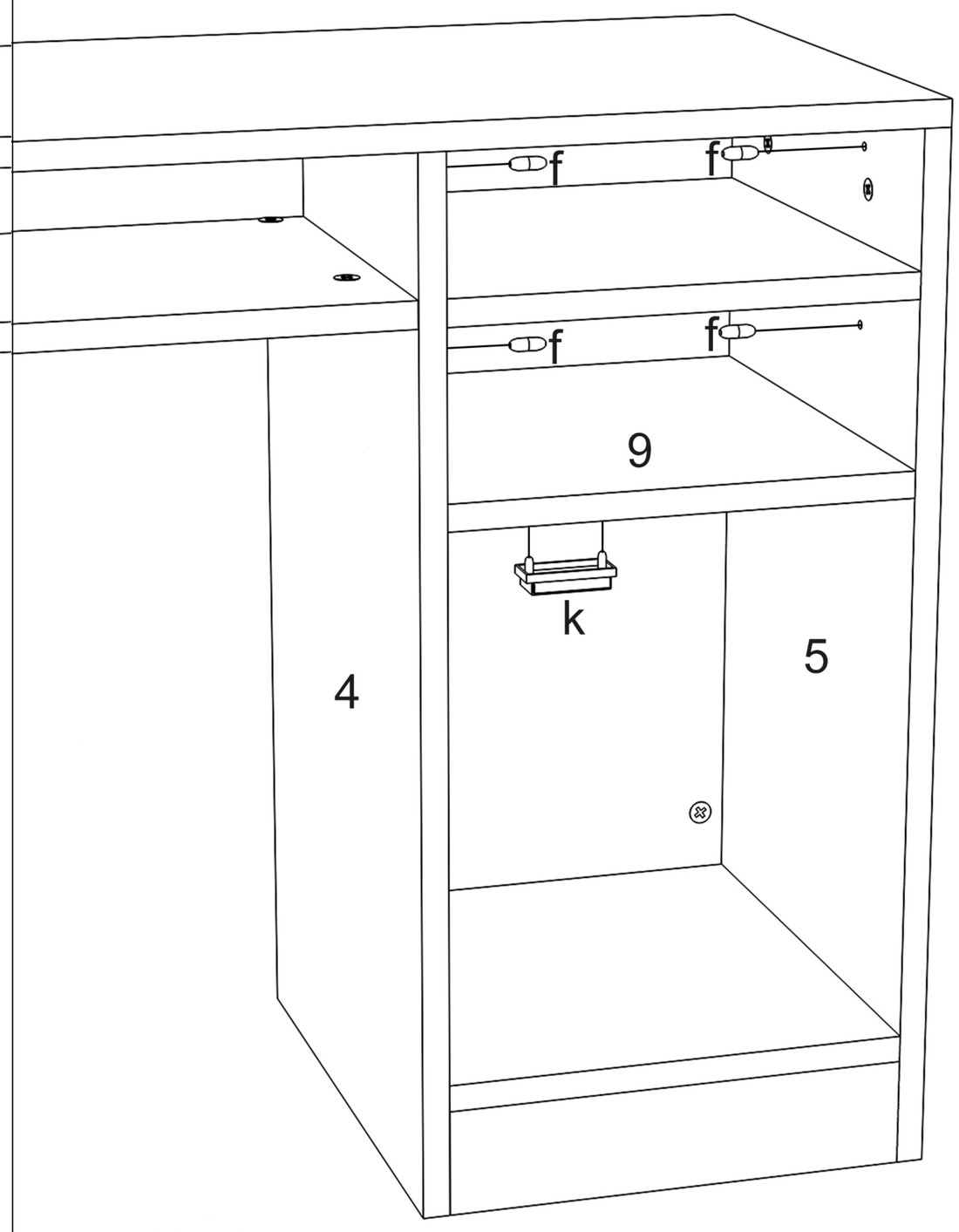

19

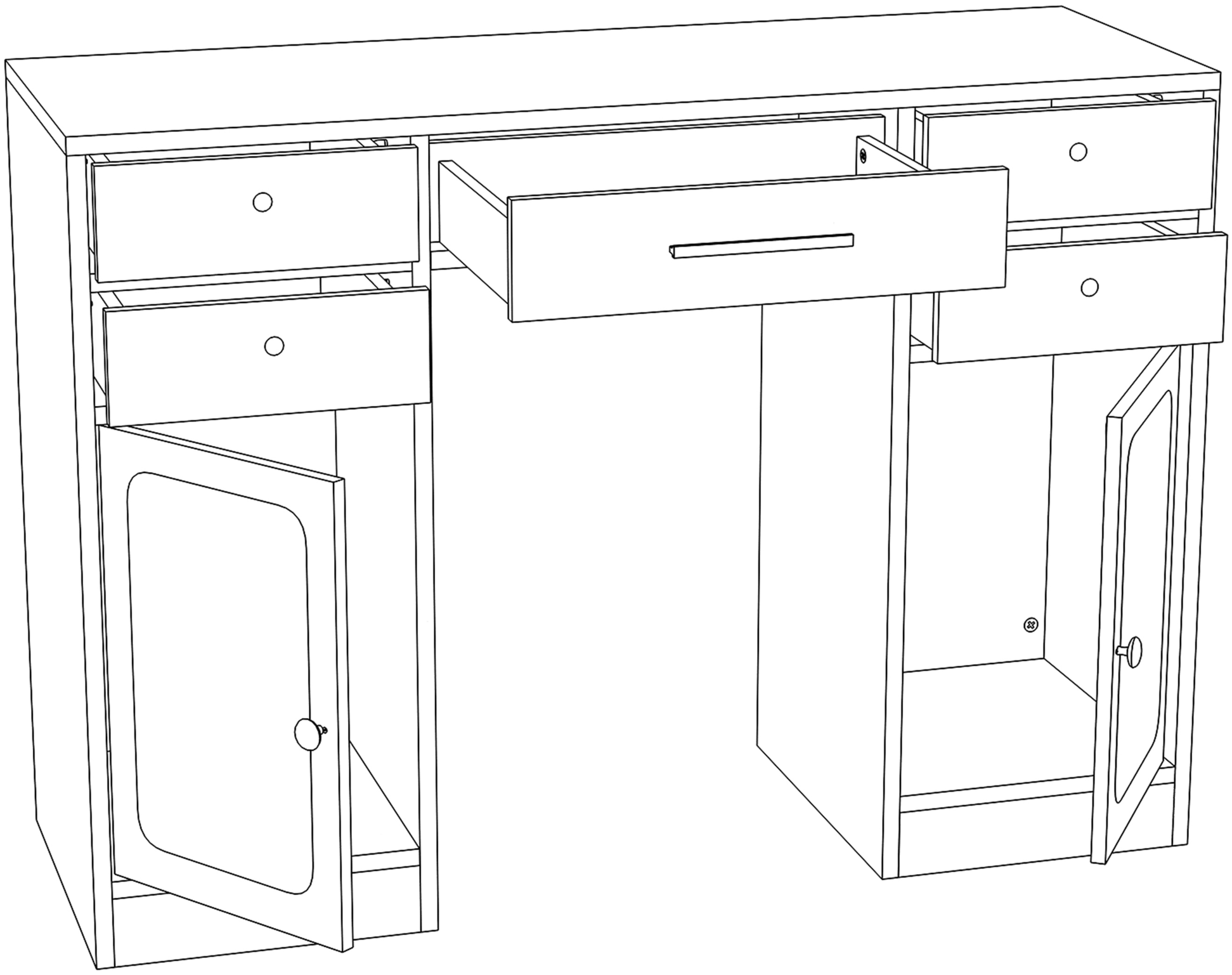

20

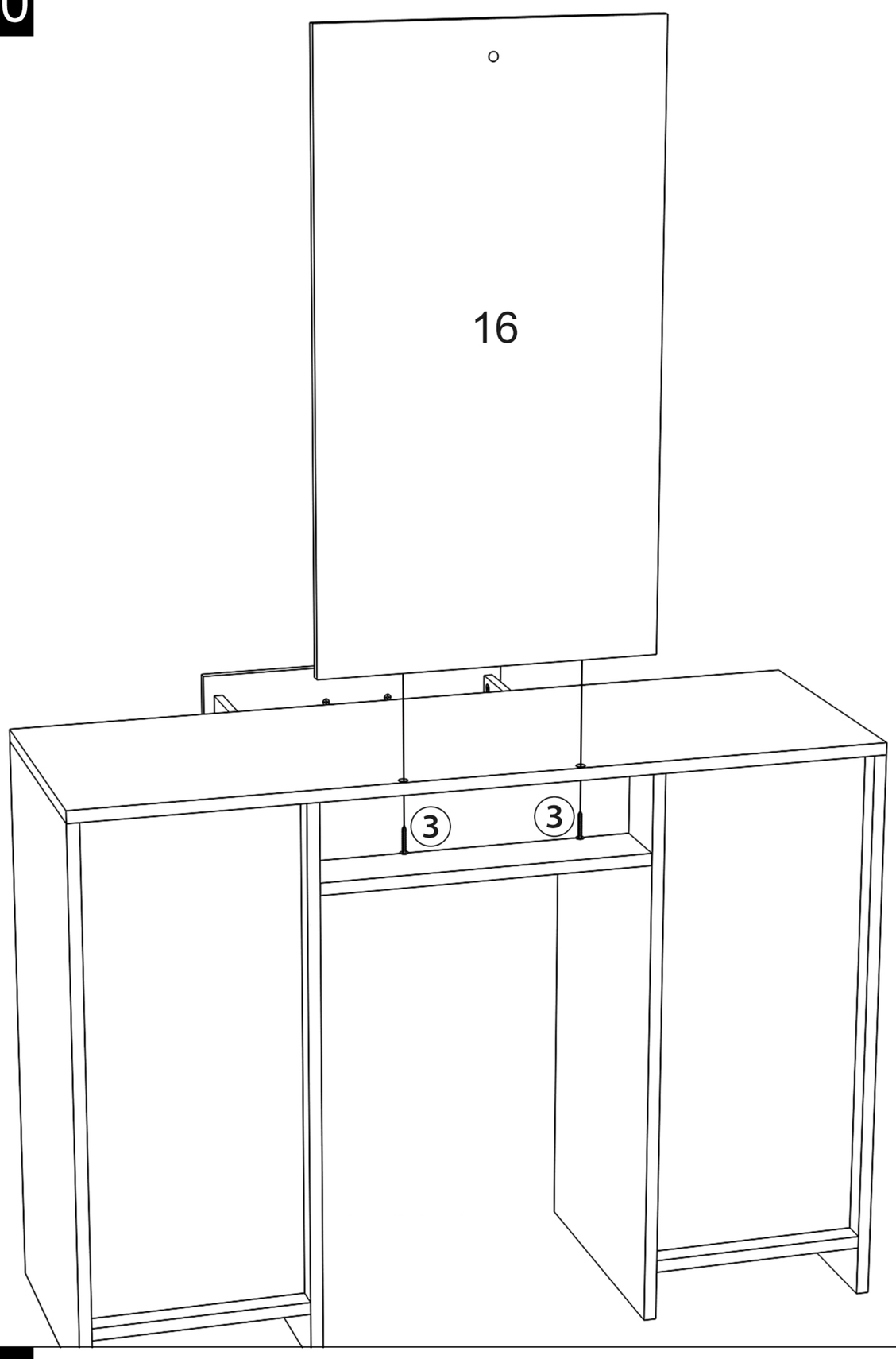

21

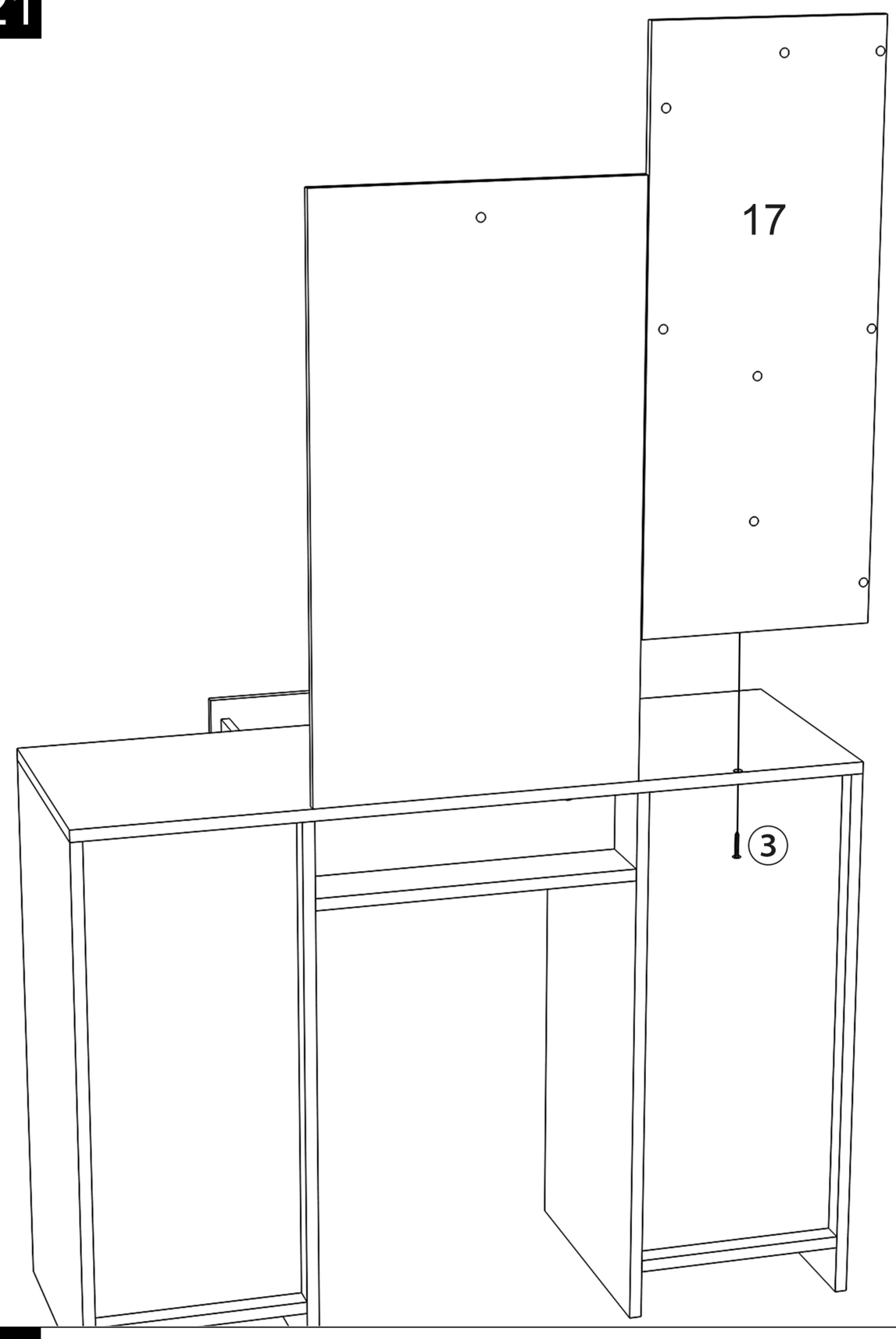

22

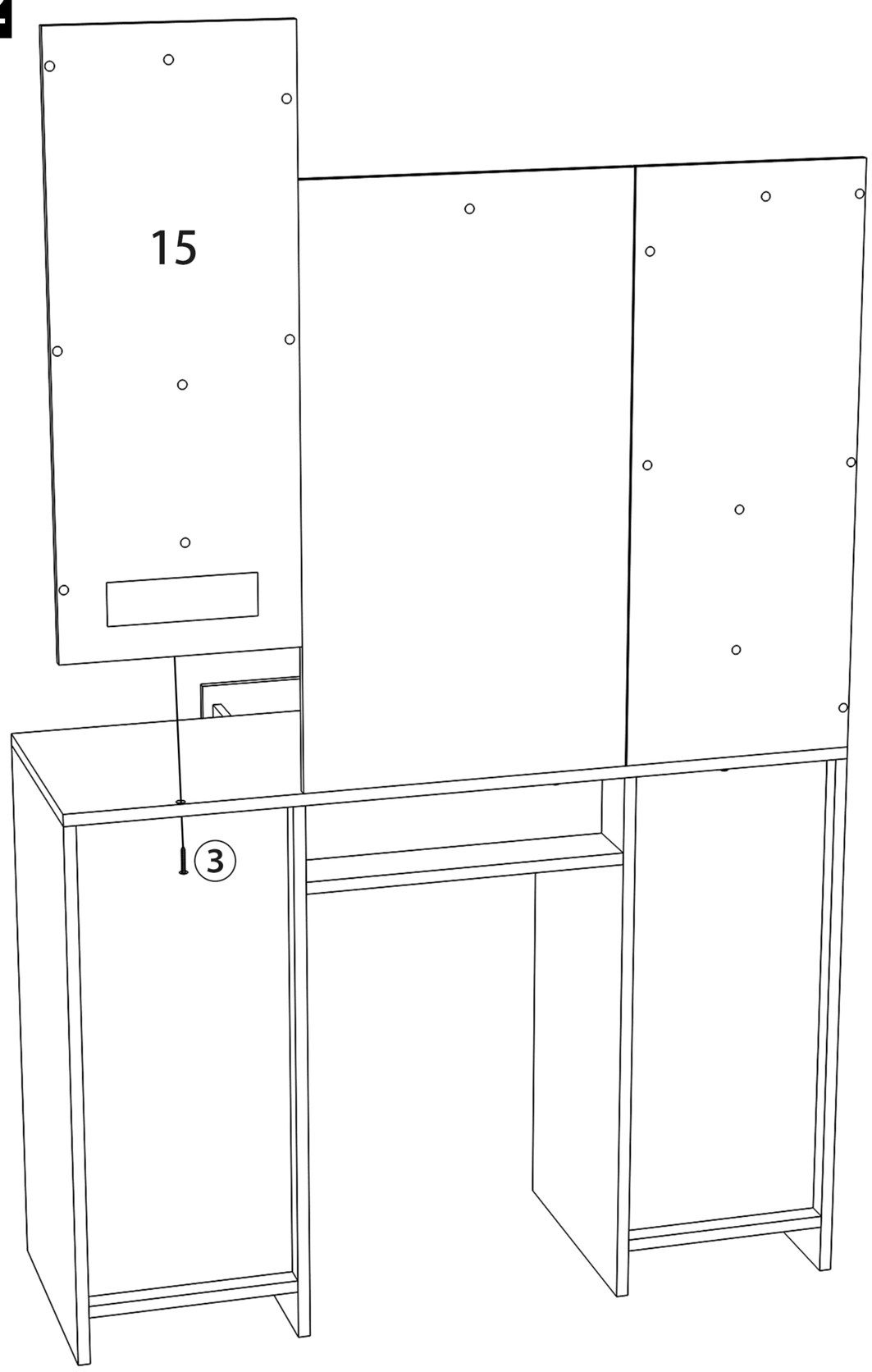

23

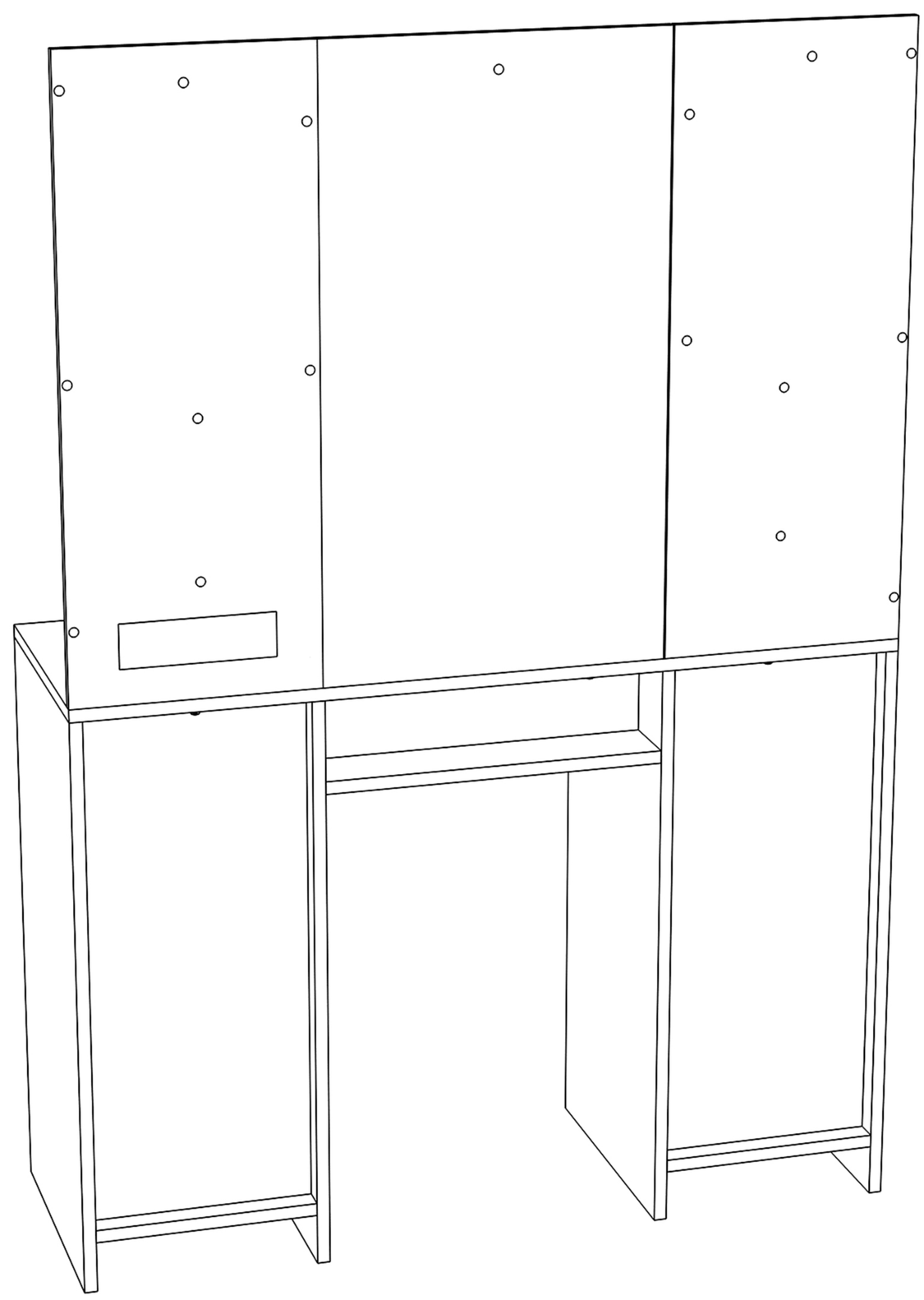

24

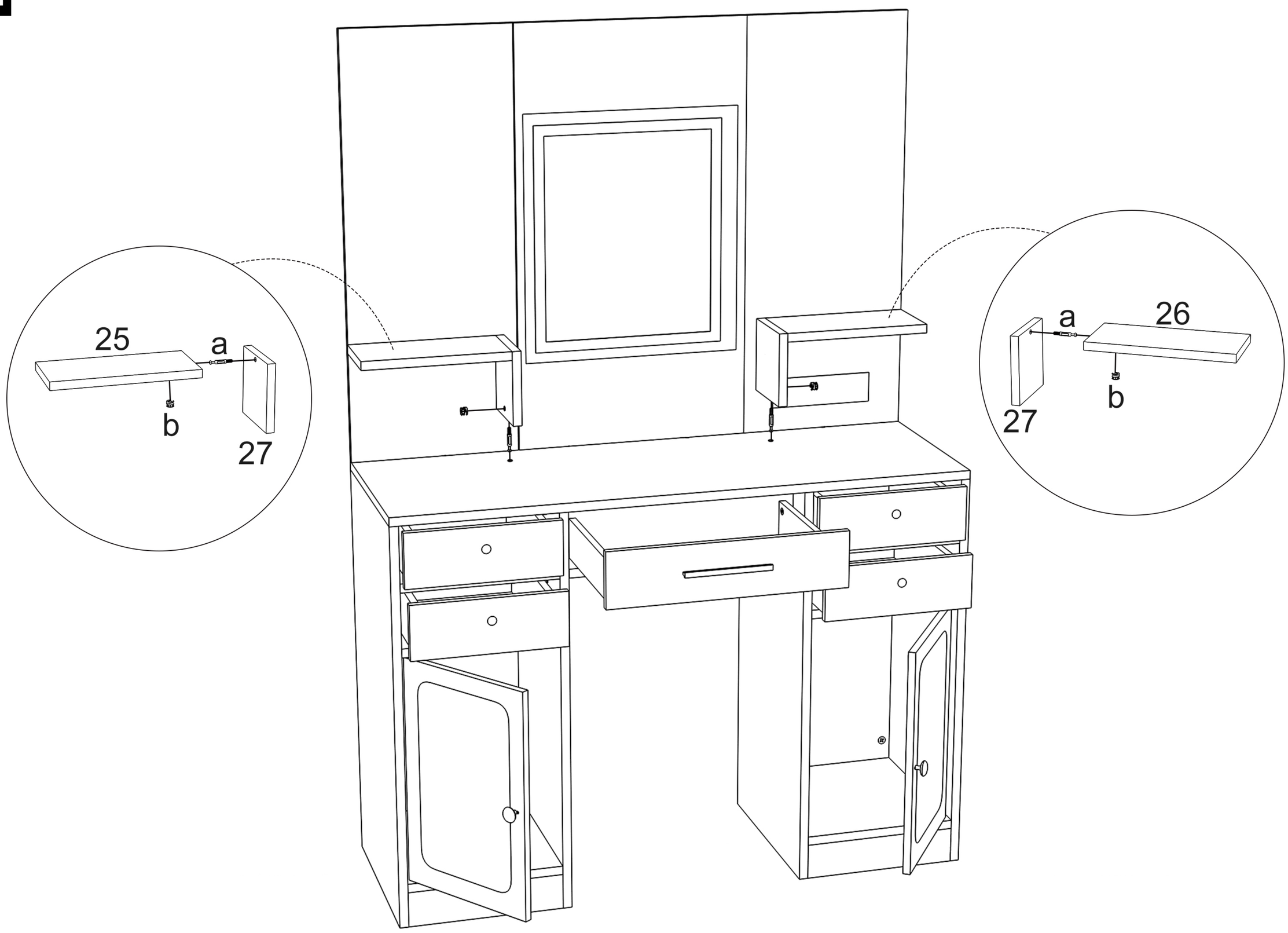

25

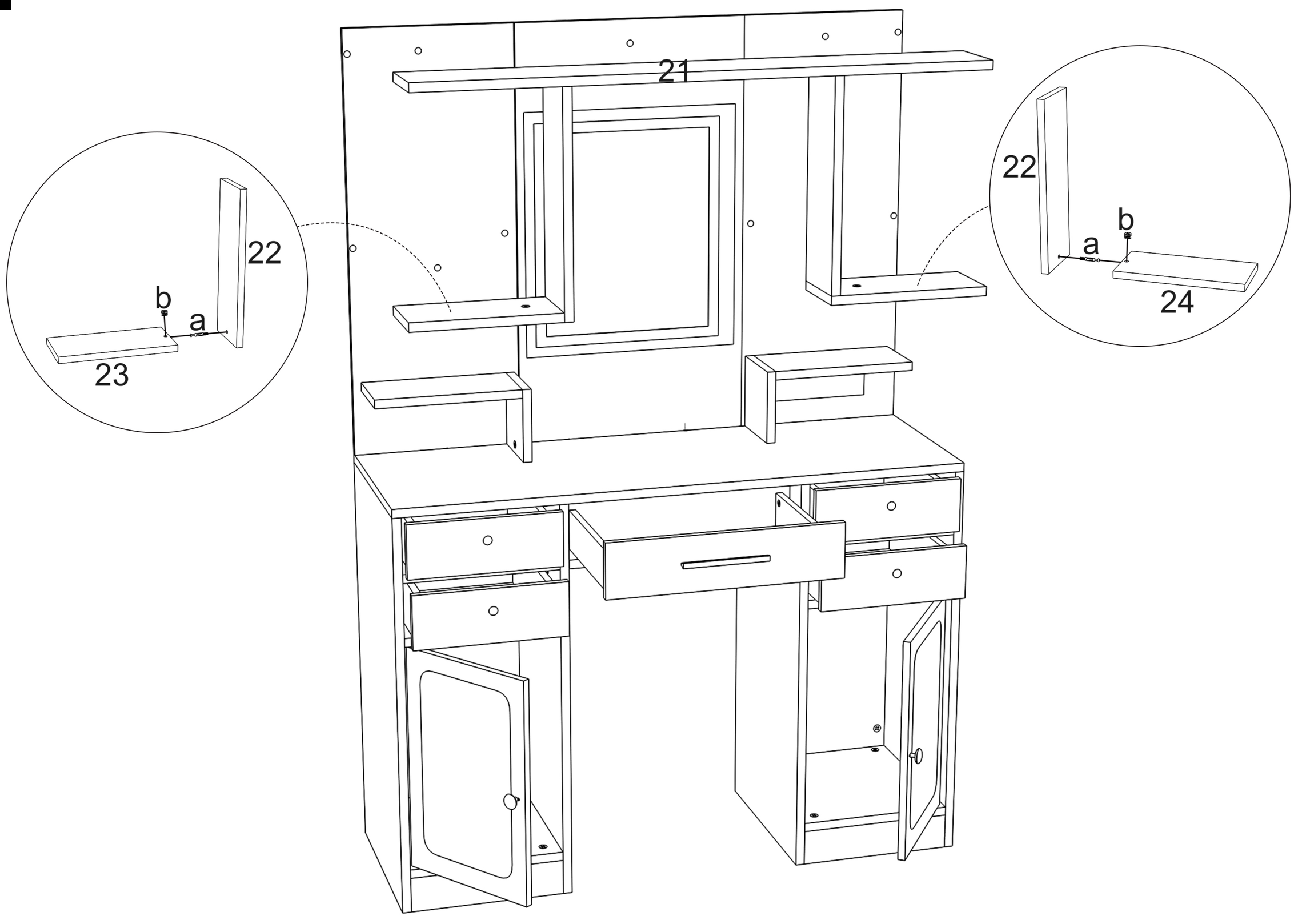

26

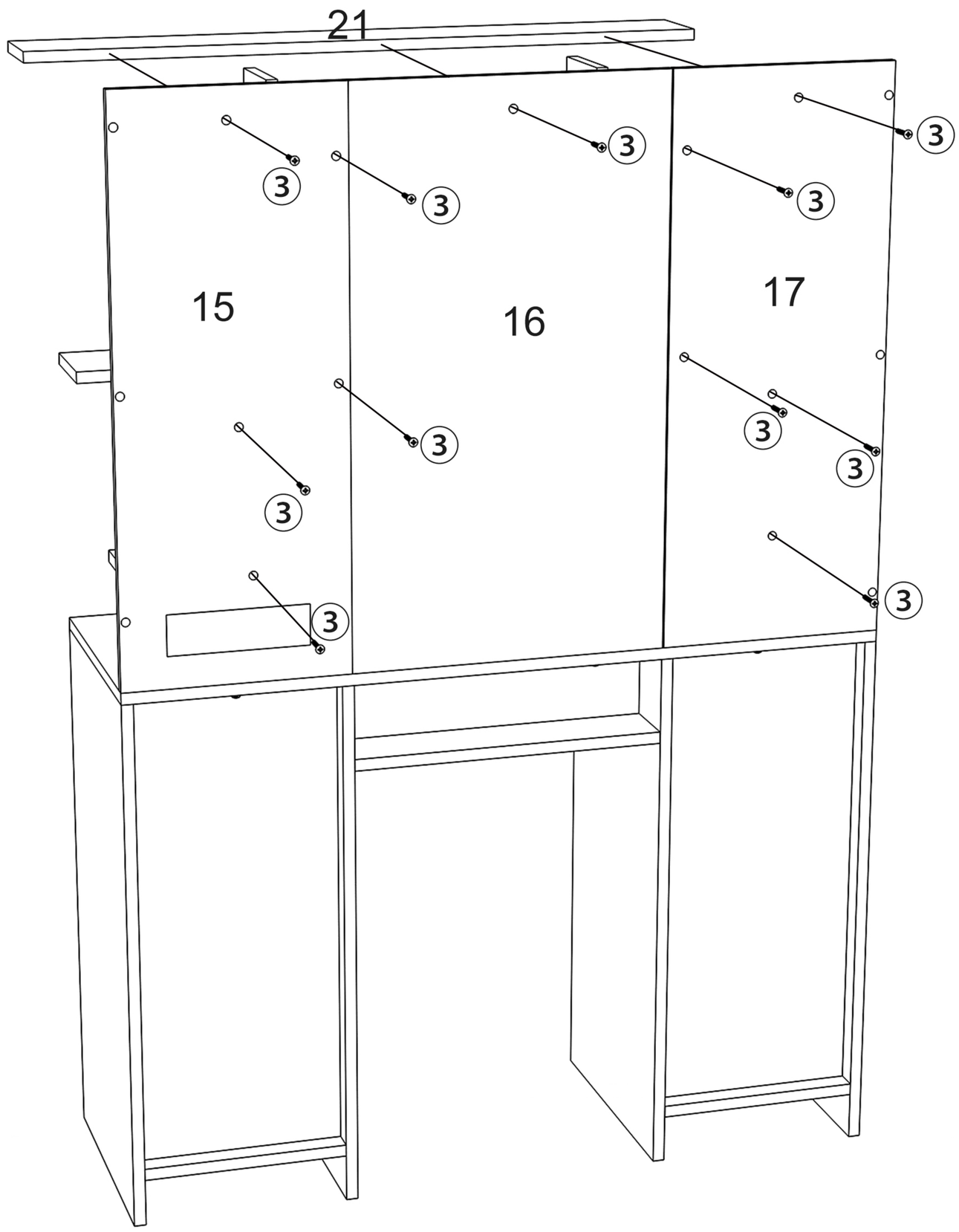

27

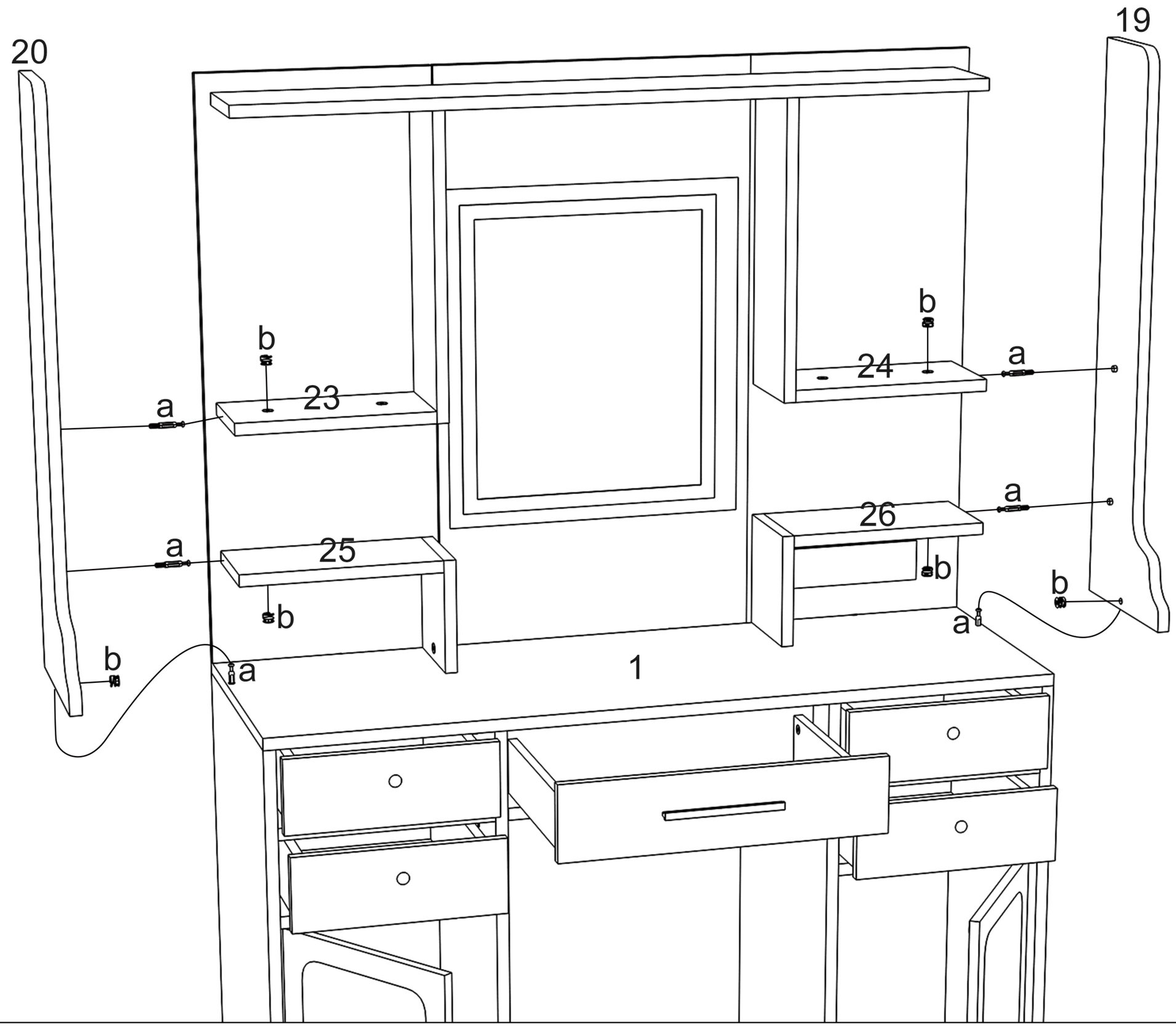

28

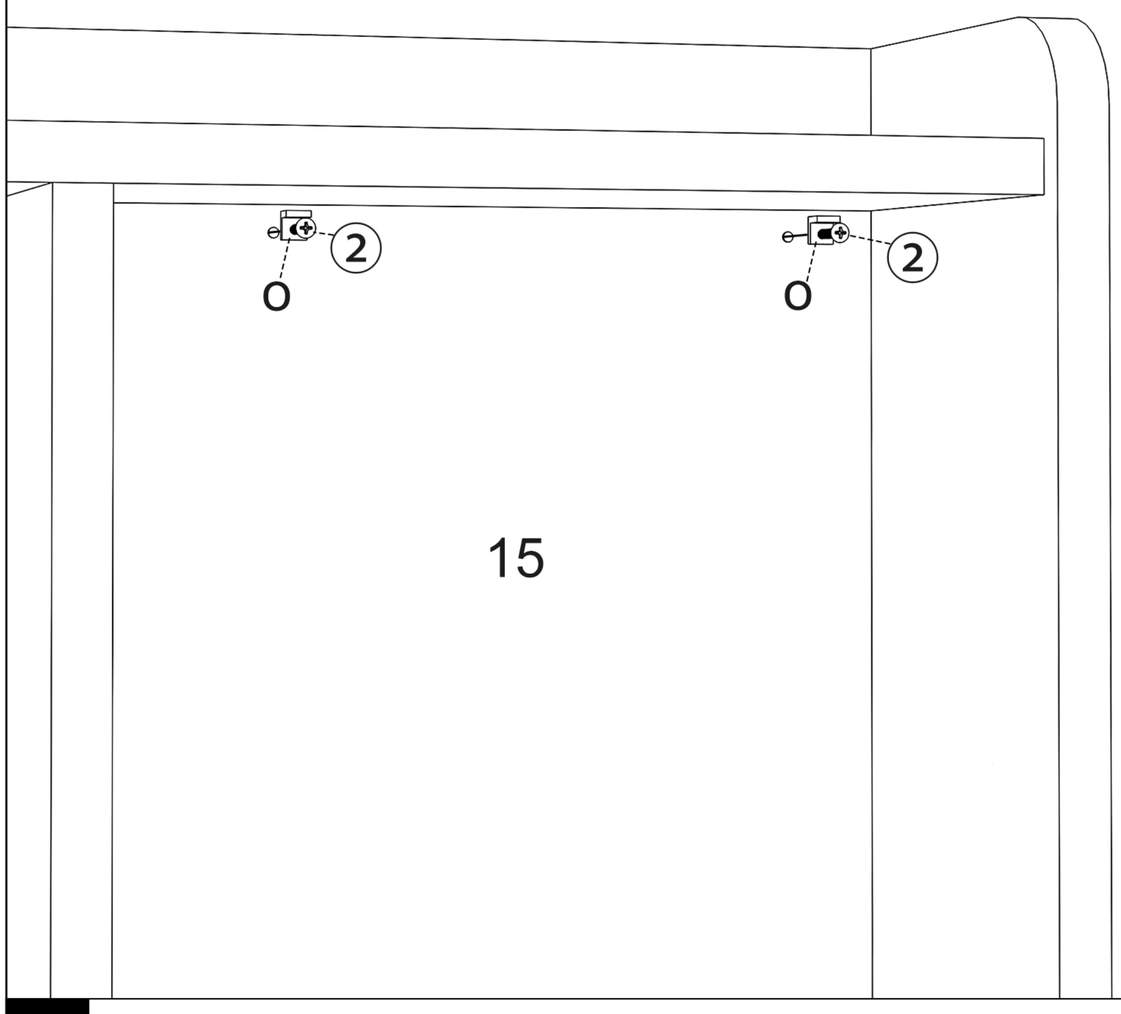

29

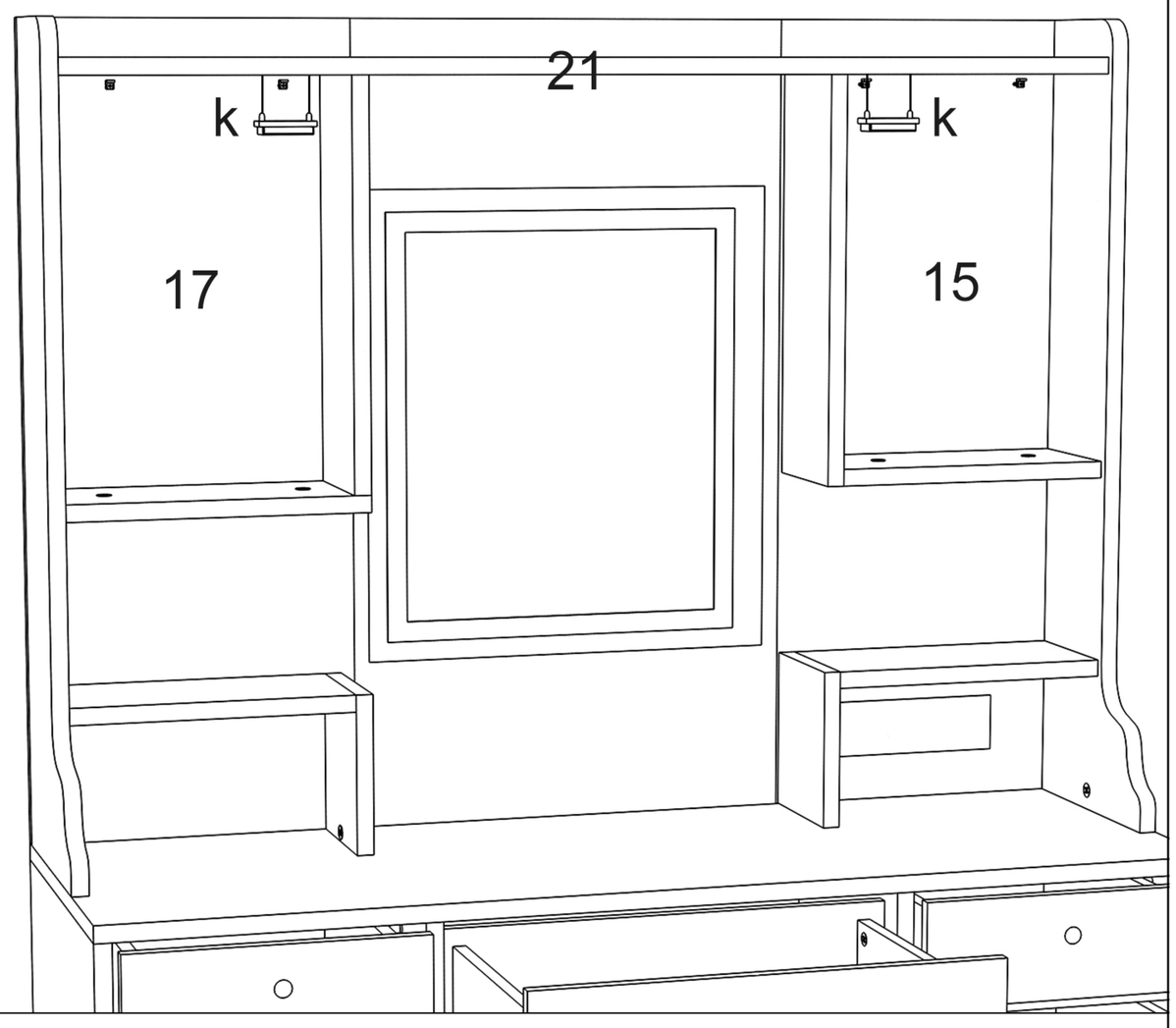

30

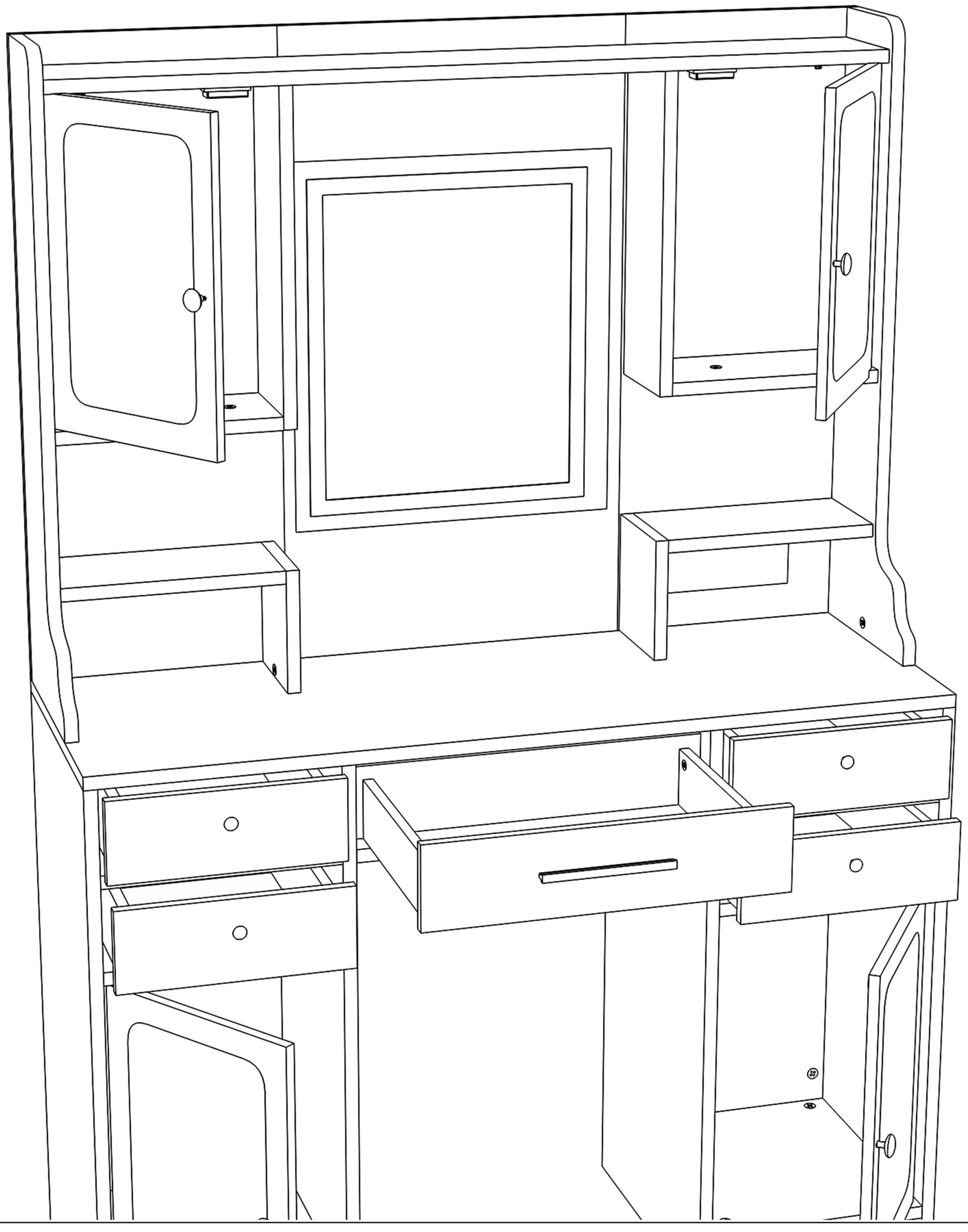

31

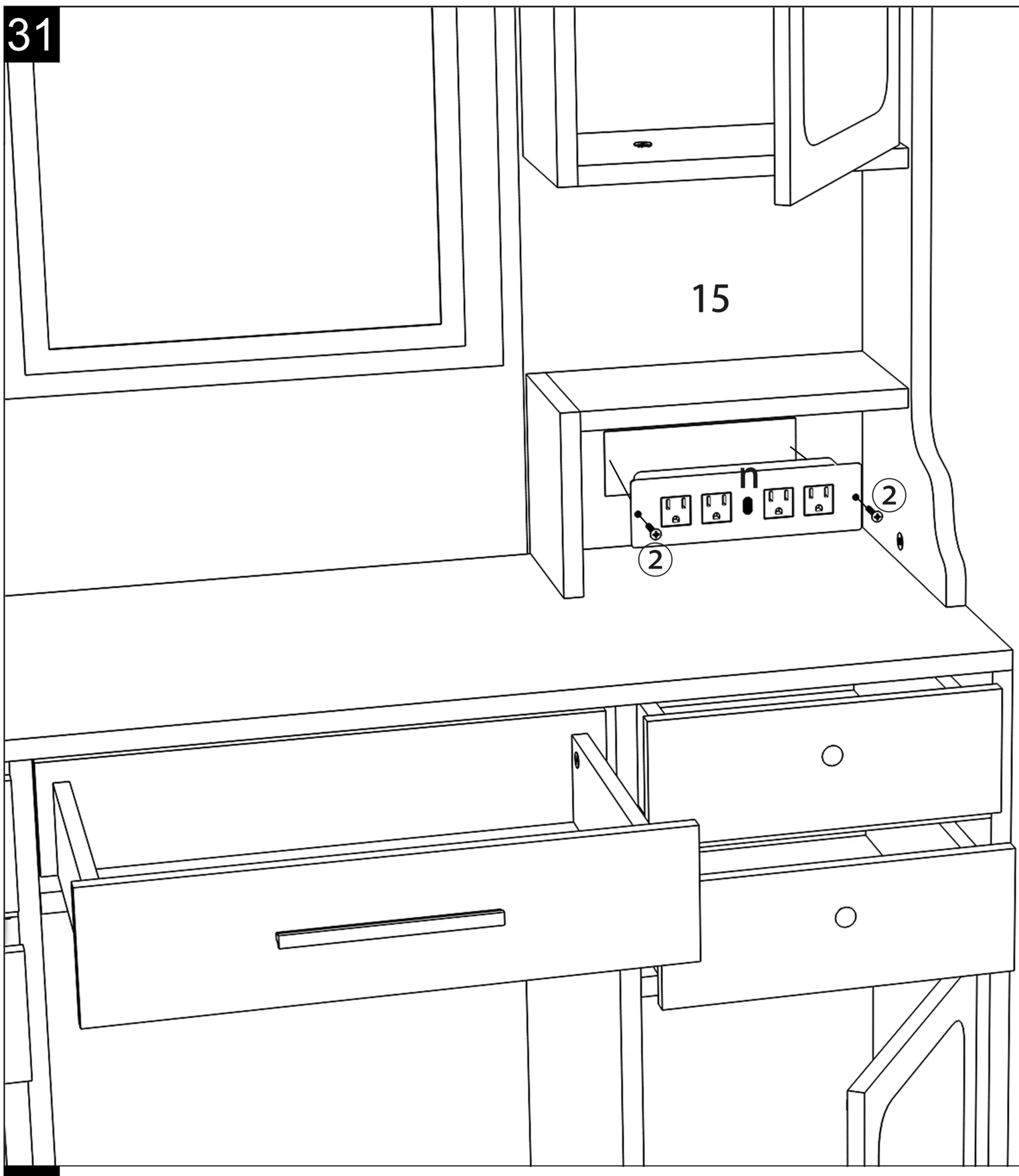

32

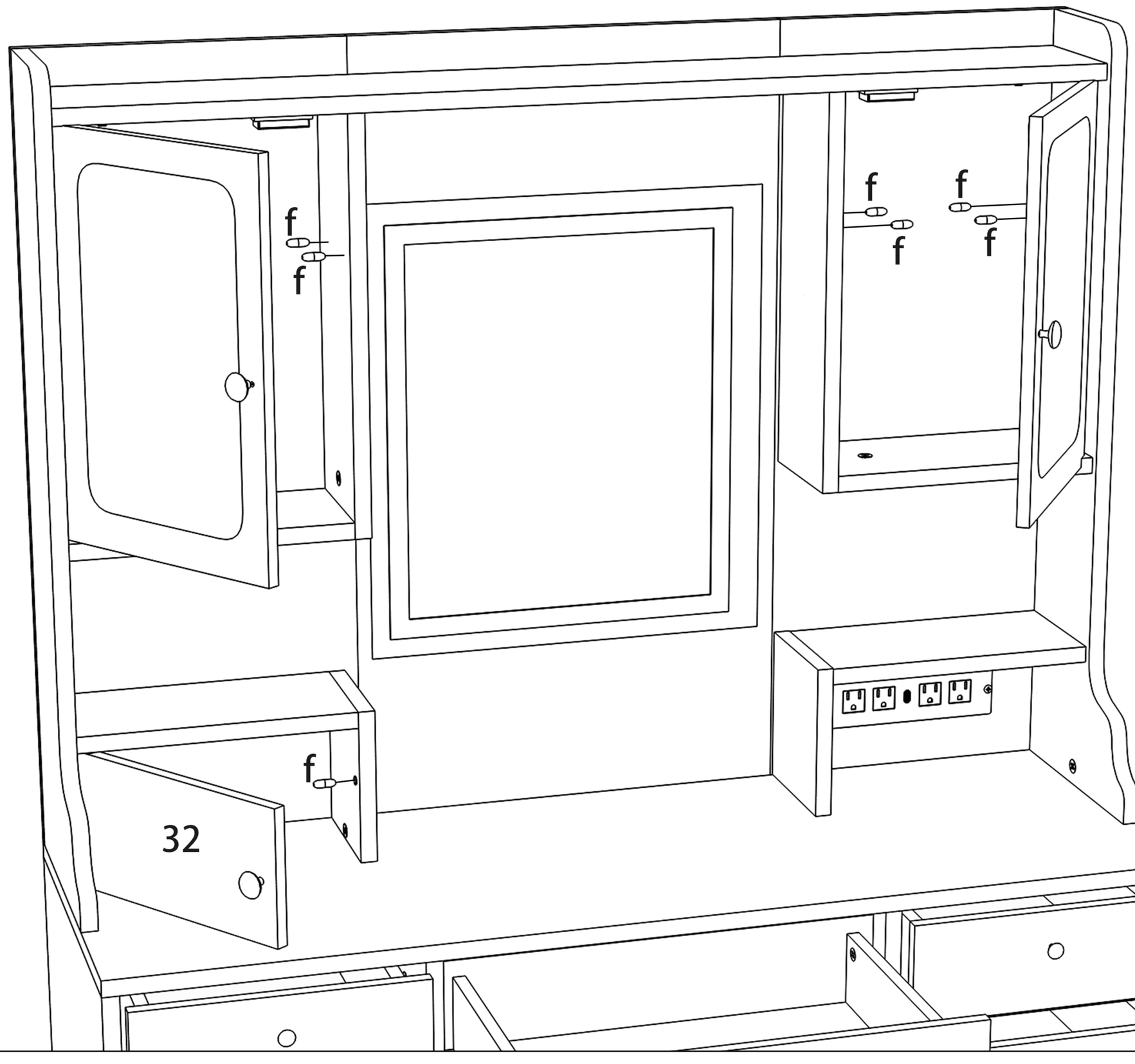

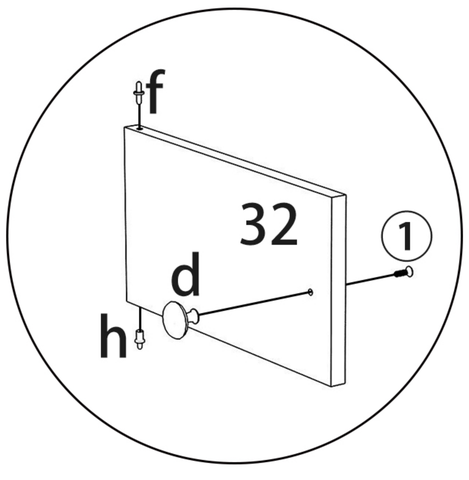

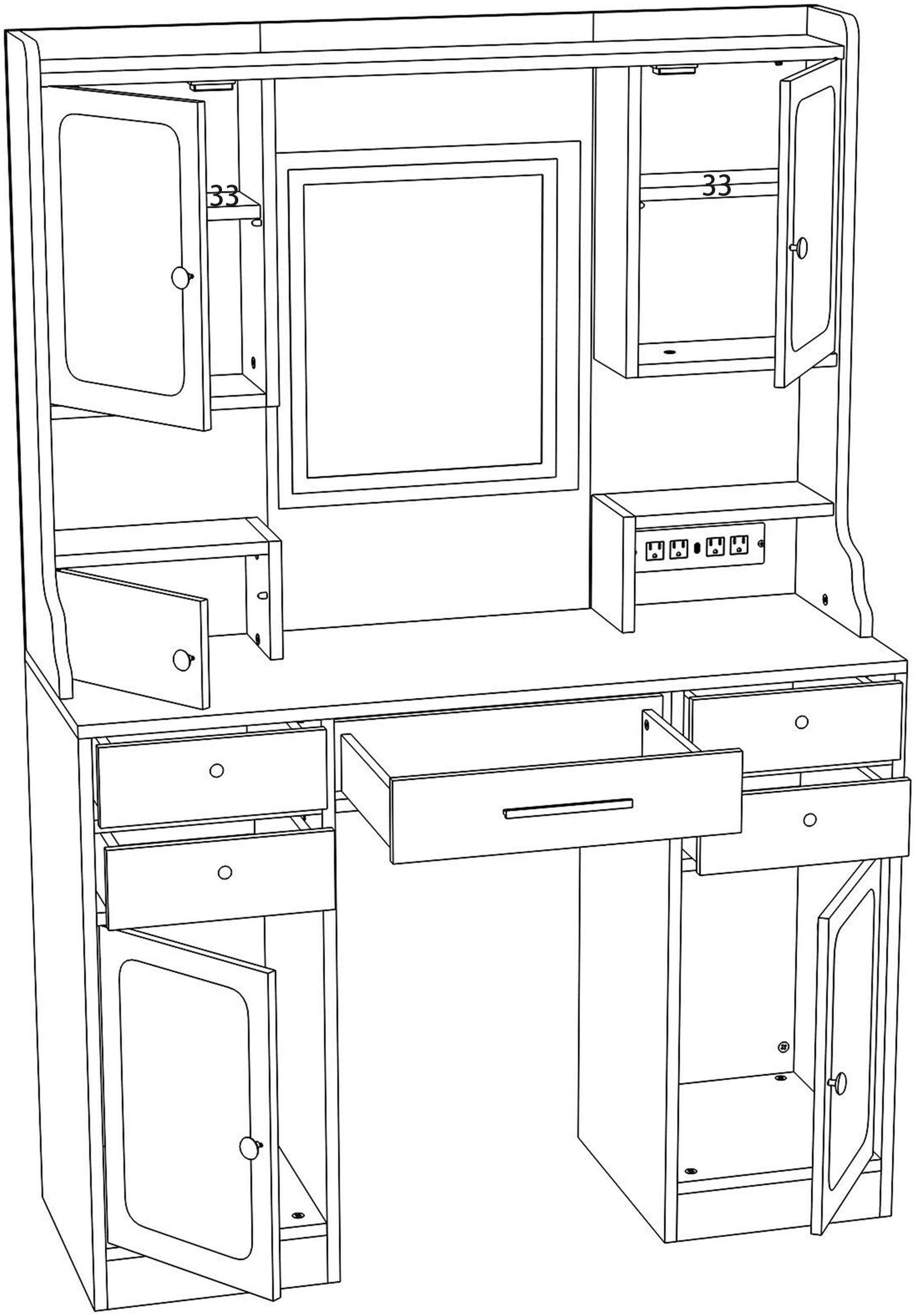
33
33