# INSTALLATION
*Product Manual*

Version: 460098US-01-25A-FR

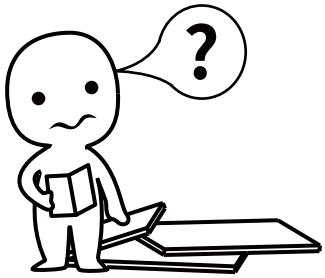

## IMPORTANT INFORMATION!

please read the entire manual before starting to assemble and/or using this product.follow the manual thoroughly and keep it for further reference.

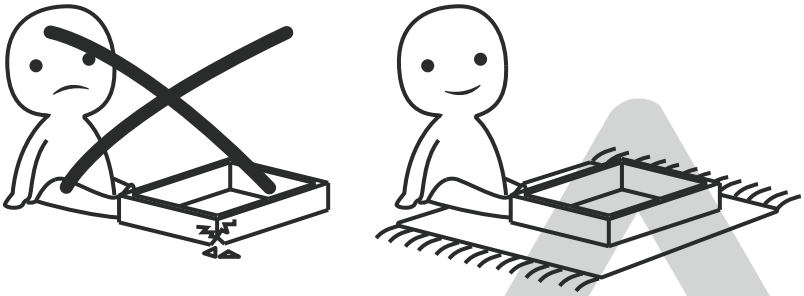

## AVOID SCRATCHES!

In order to avoid scratching this furnuture should be assembled on a soft layer-could be a rug.

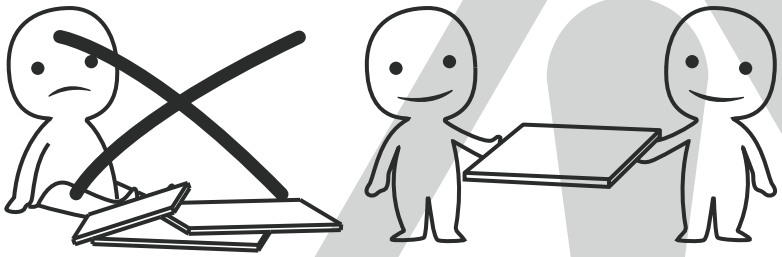

## IMPROVE EFFICIENCY !

Try to find a partner to install with you, which can speed up the installation efficiency and shorten the time.

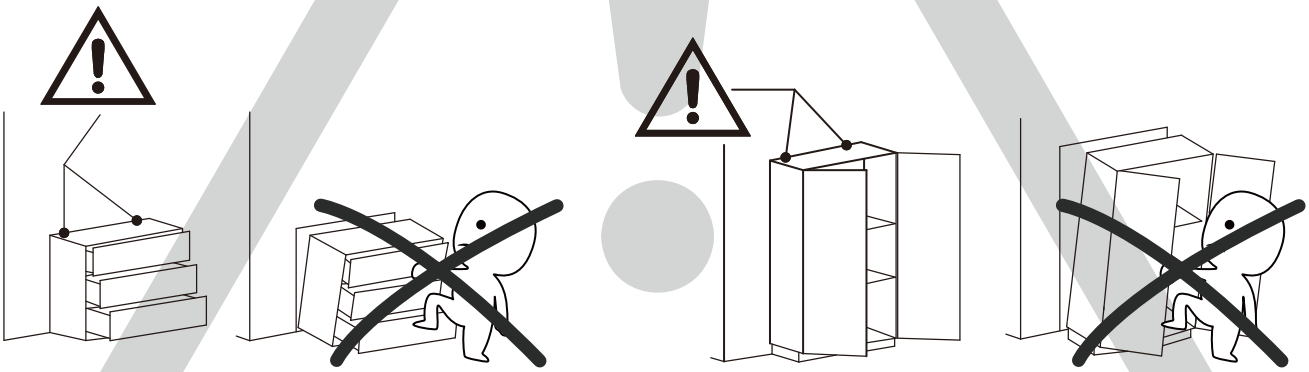

## ANTI-TOPPLE WARNING !

Overturned furniture can cause serious or fatal crush injuries. To prevent tipping over, be sure to use the wall attachment, if not included with this product. Please purchase the wall attachment that fit your wall. If unsure, seek professional advice. Please read and follow each step of the instructions carefully.

## IMPORTANT !

It is important that any product which is assembled using any kind of screw is re-tightened 2 weeks after assembly,and once every 3 months - in order to assure stability through-out the lifespan of the product.

For regular maintenance and cleaning of the product, for the frame, please use a rag dipped in neutral detergent to fully wipe it, and then dry it with a clean rag.For glass materials, wipe with a rag dampened with water glass cleaner, and then dry with a dry rag.

Do not use an electric screwdriver, and do not use too much force when installing, because the board is easy to break.

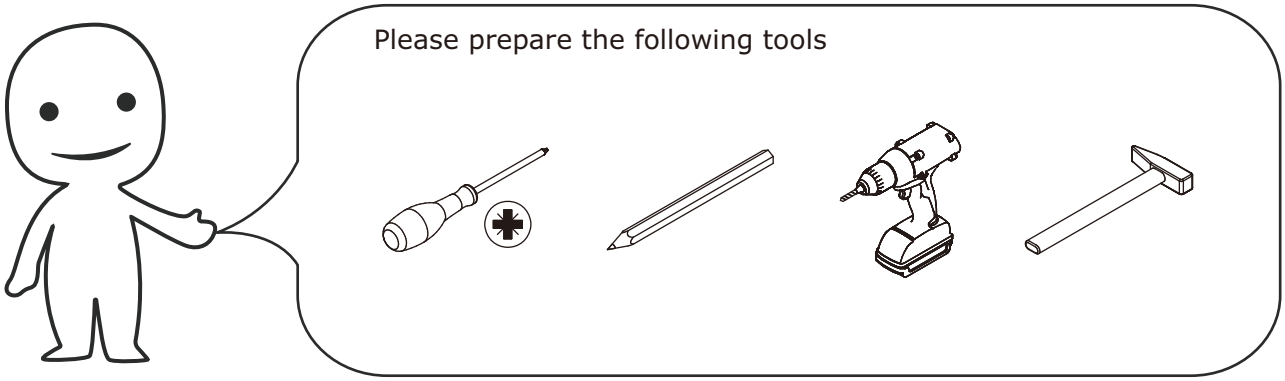




When installing, please carefully confirm whether each screw corresponds to the manual, accessories with similar shapes can be distinguished by size

| A x 60 | B x 20 | C x 36 | D x 2 | E x 70 |
|---|---|---|---|---|
| 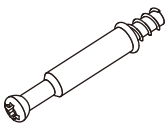 | 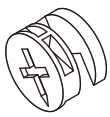 | 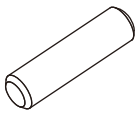 |  |  |
| ∅6 x 35 mm | ∅15 x 11 mm | ∅6 x 30 mm | L = 350 mm | ∅3 x 12 mm |

| F x 8 | G x 8 | H x 4 | J x 10 | K x 96 |
|---|---|---|---|---|
|  | 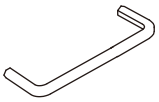 |  | 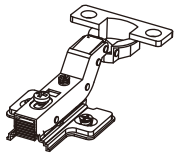 |  |
| ∅4 x 30 mm | | ∅4 x 12 mm | | ∅3.5 x 14 mm |

| L x 12 | M x 34 | P x 8 | Q x 2 | R x 1 |
|---|---|---|---|---|
|  |  | 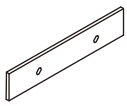 | 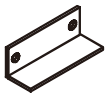 |  |
| ∅4 x 22 mm | | | | ∅3.5 x 14 mm |

| S x 2 | T x 4 | U x 6 | V x 40 | W x 4 |
|---|---|---|---|---|
| 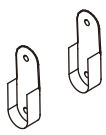 |  | 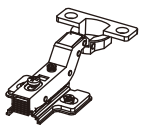 | 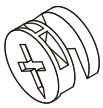 | 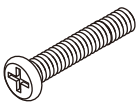 |
| | | | ∅15 x 9.5 mm | ∅6 x 40 mm |

| X x 2 | Y x 8 |
|---|---|
|  |  |
| | ∅4 x 12 mm |

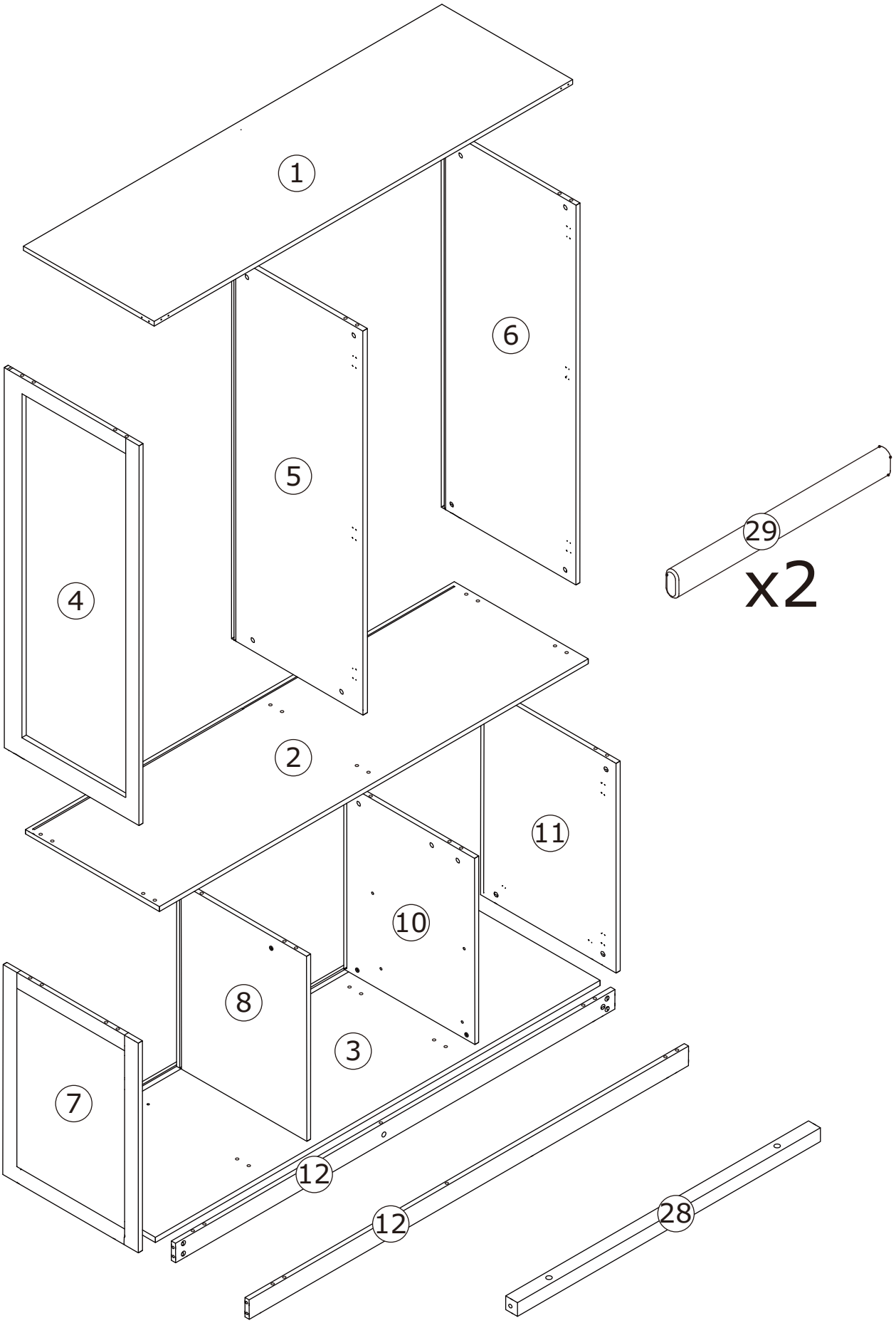
1
6
5
4
29
x2
2
11
10
8
3
7
12
12
28

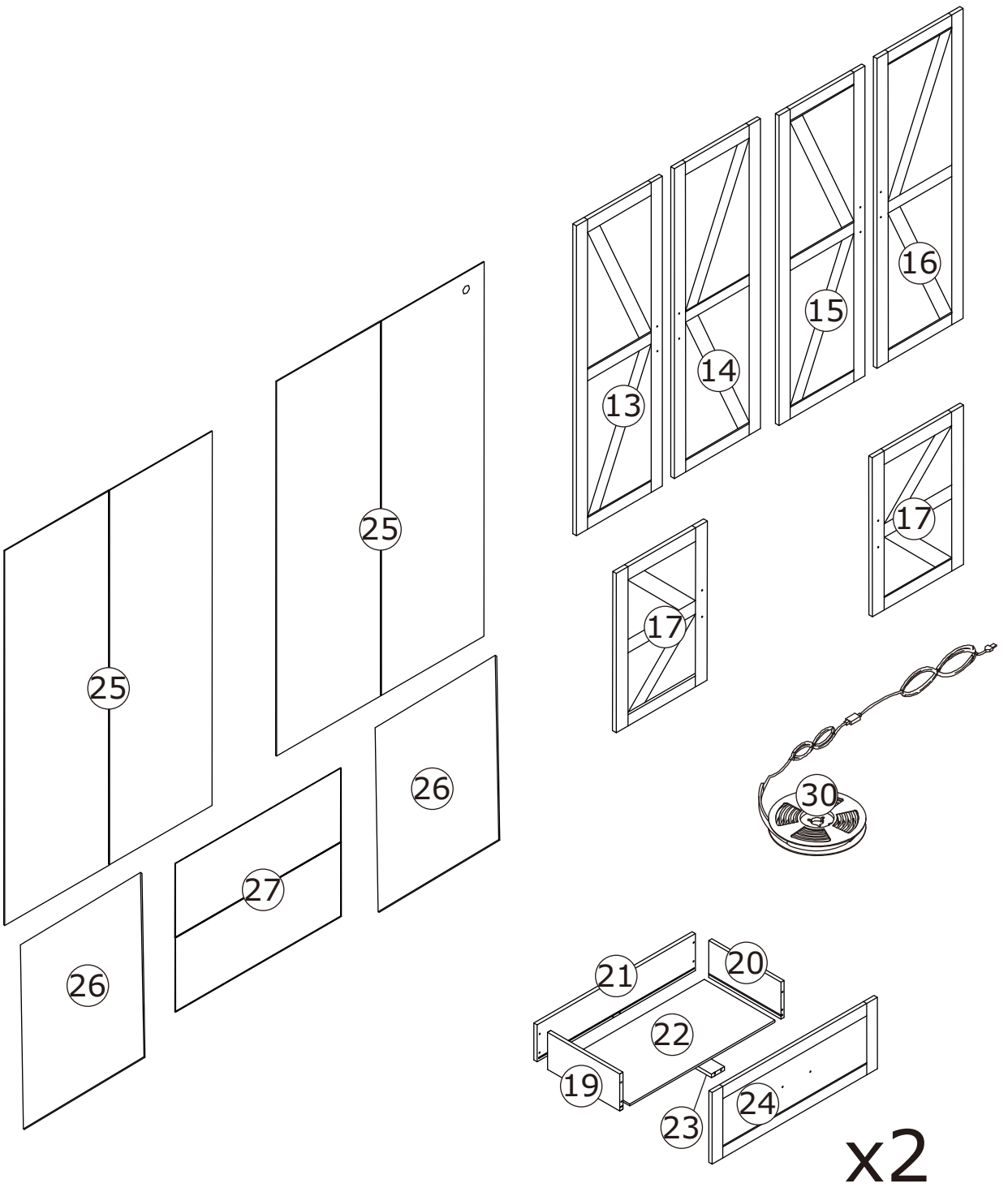


## ⚠WARNING






**Children have died from furniture tipover.To reduce the risk of furniture tipover:**

- ALWAYS install Anti-tip device provided.
- NEVER put a TV on this product.
- NEVER allow children to stand,climb or hang on drawers,doors,or shelves
- NEVER open more than one drawer at a time.
- Place heaviest items in the lowest drawers.

This is a permanent label.
Do not remove!

Do not remove!

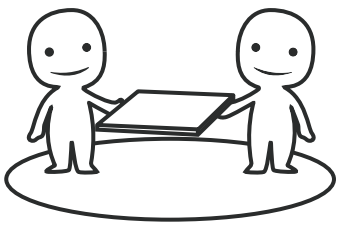

ASSEMBLED BY 2 ADULTS

# 1

A x 8



∅6 x 35 mm

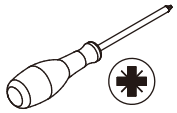

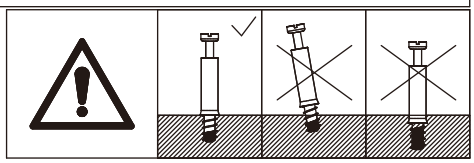

Secure the screw (A) in panel 3 as shown.

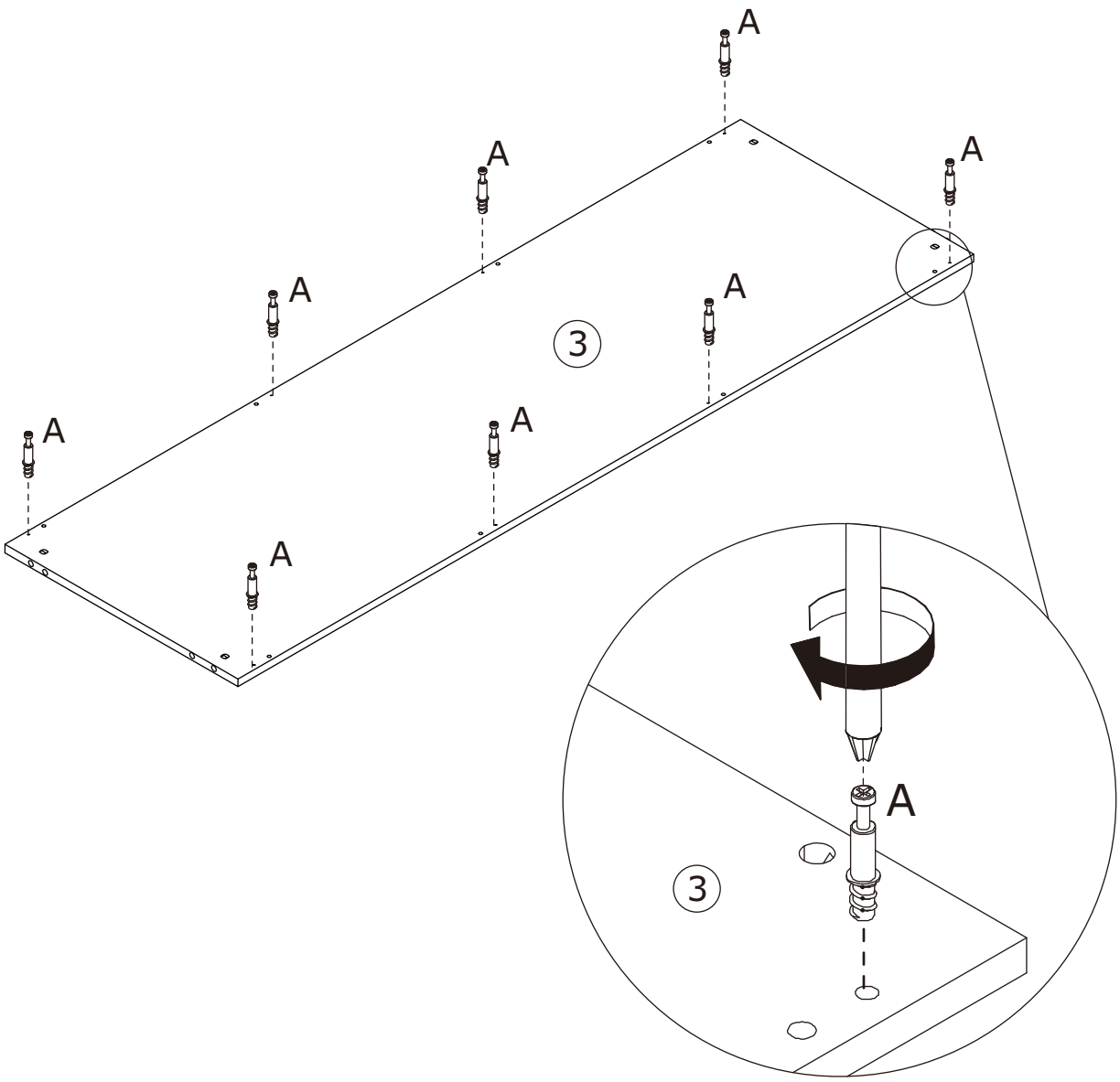

# 2

| B x 8 | C x 8 | |
|---|---|---|
|  |  | 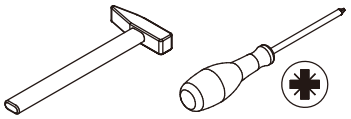 |
| ∅15 x 11 mm | ∅6 x 30 mm | |

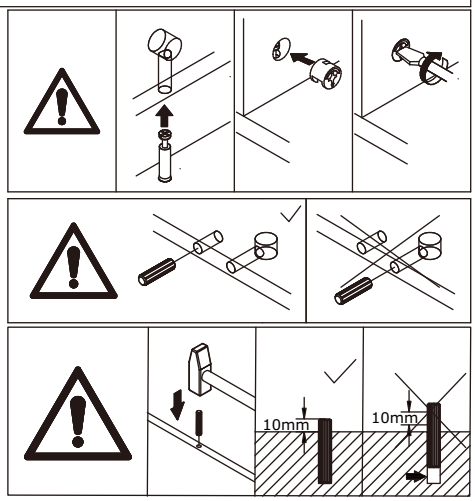


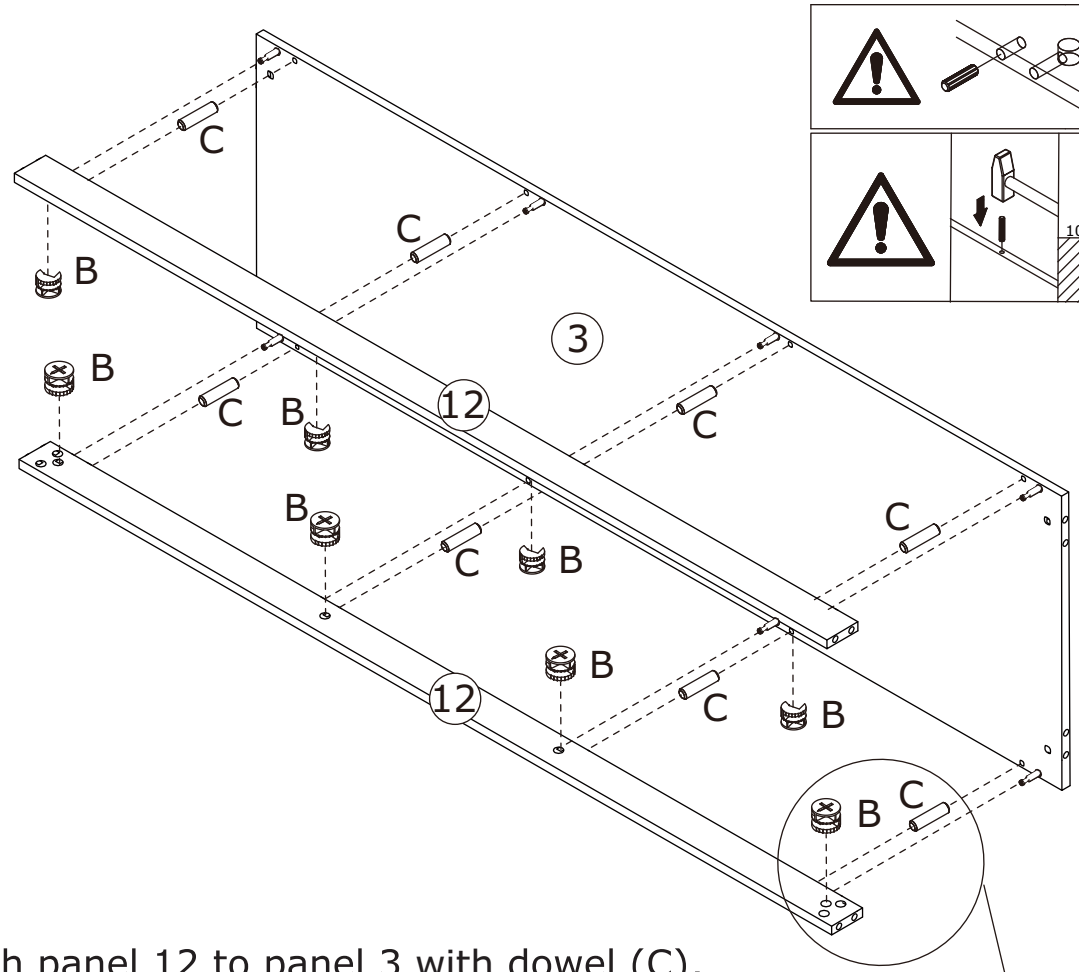


Attach panel 12 to panel 3 with dowel (C), add eccentric wheels (V) to tighten in a clockwise rotation as shown

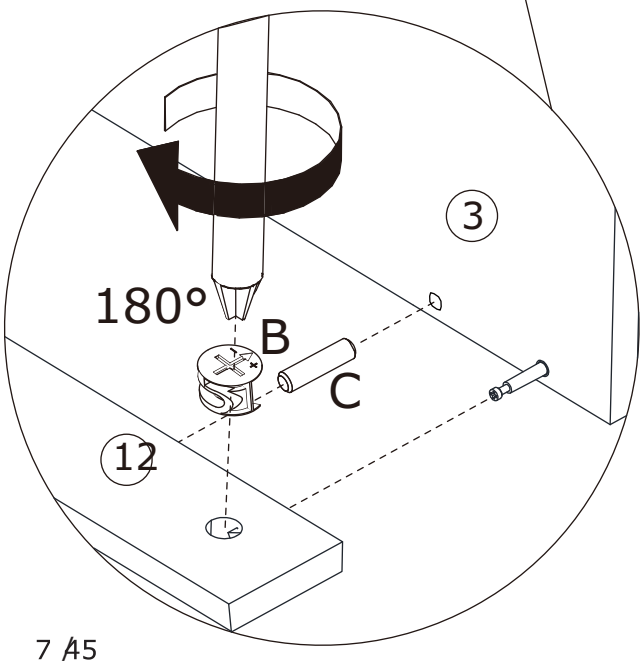

3

A x 4



∅6 x 35 mm

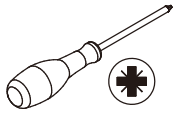

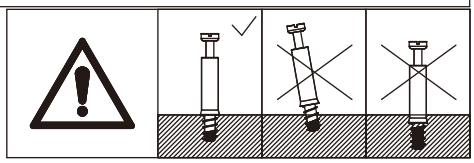

Secure the screw (A) in panel 3 as shown.

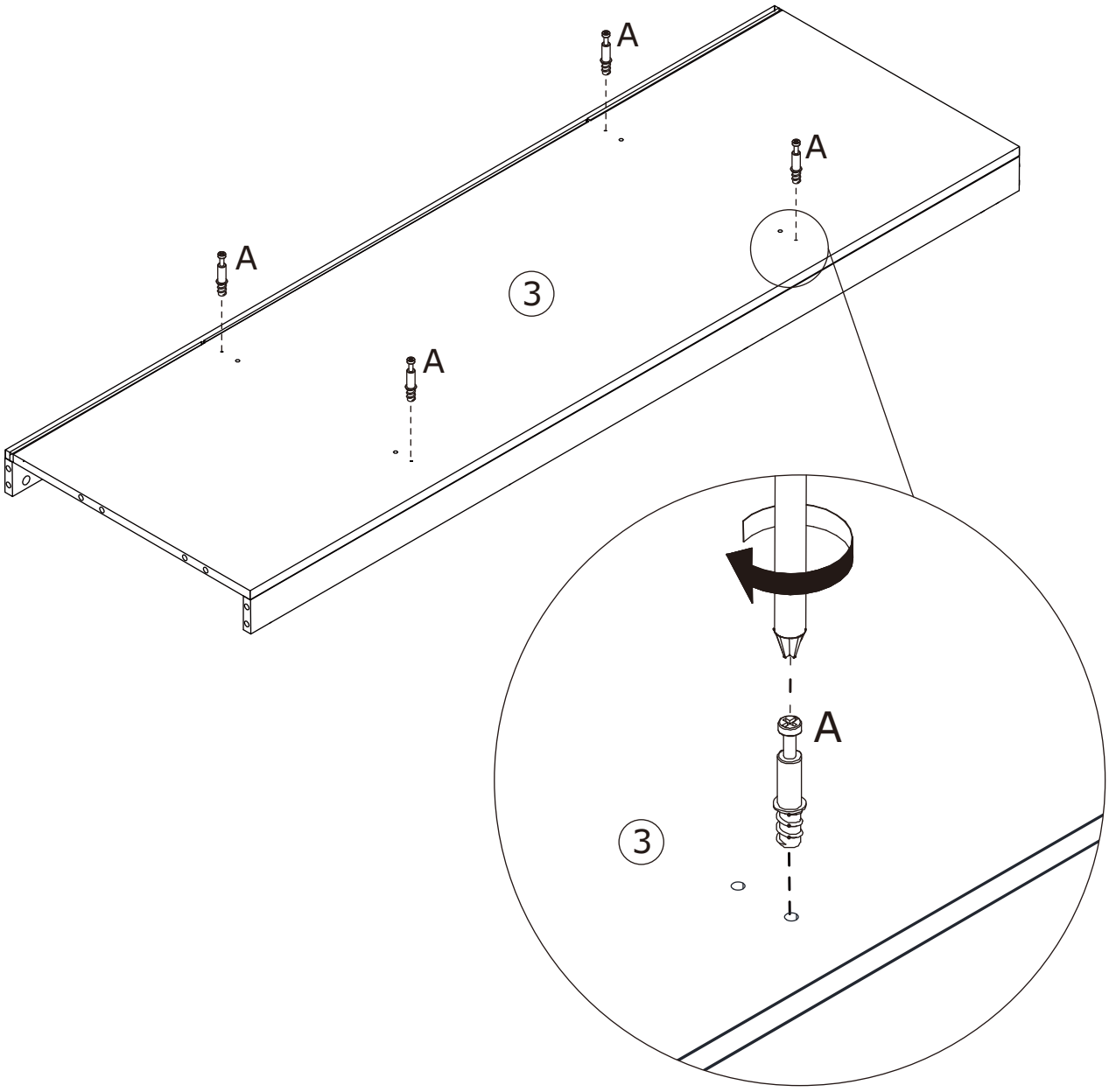

4

A x 6



∅6 x 35 mm

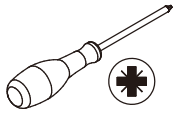

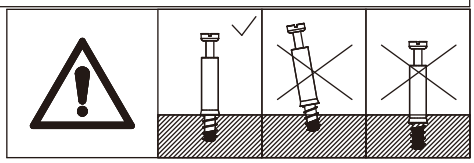

Secure the screw (A) in panel 11 as shown.

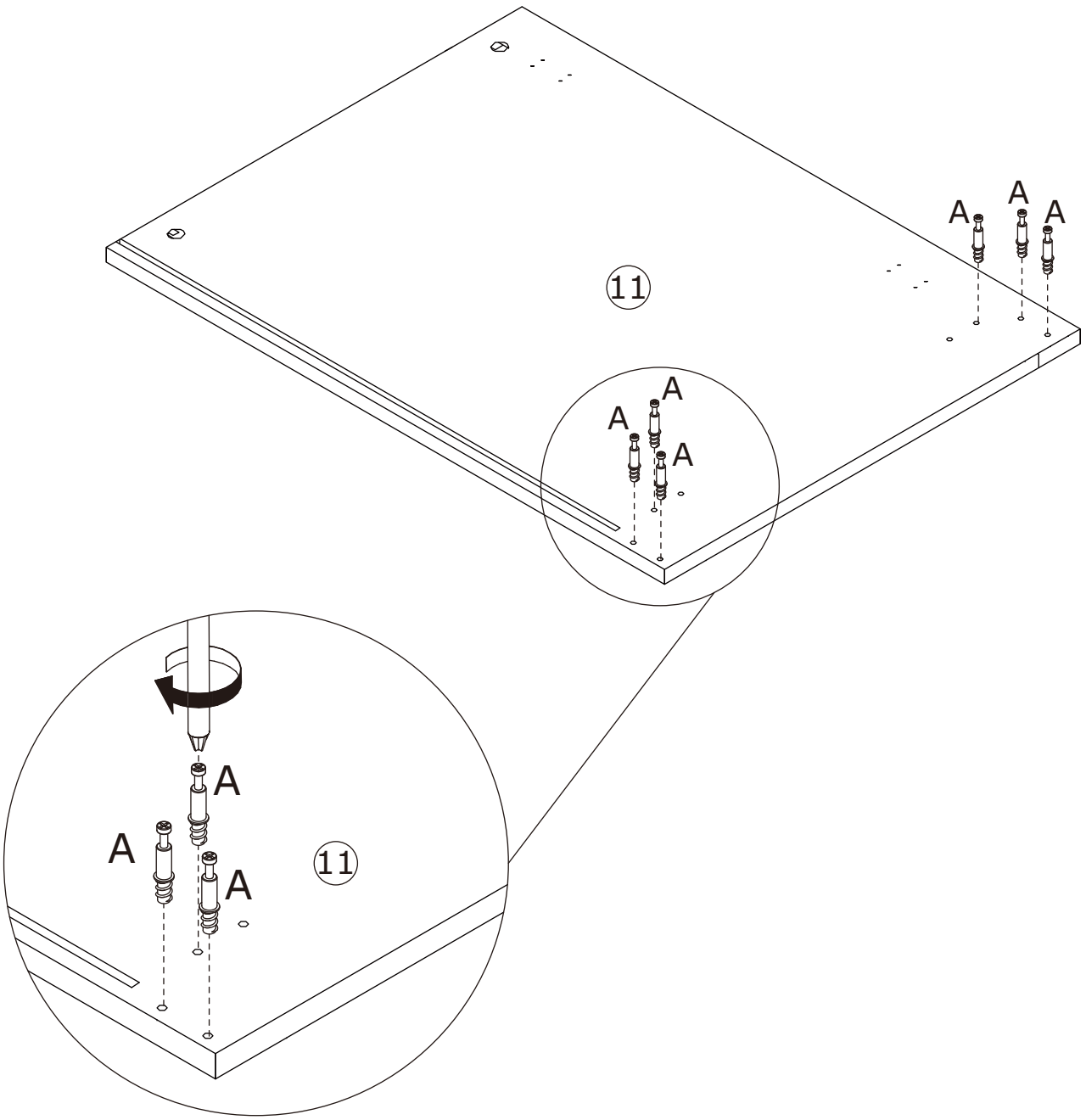

# 5

A x 6

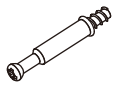

∅6 x 35 mm

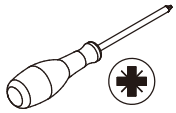

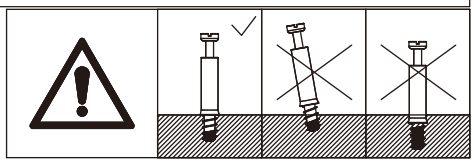

Secure the screw (A) in panel 7 as shown.

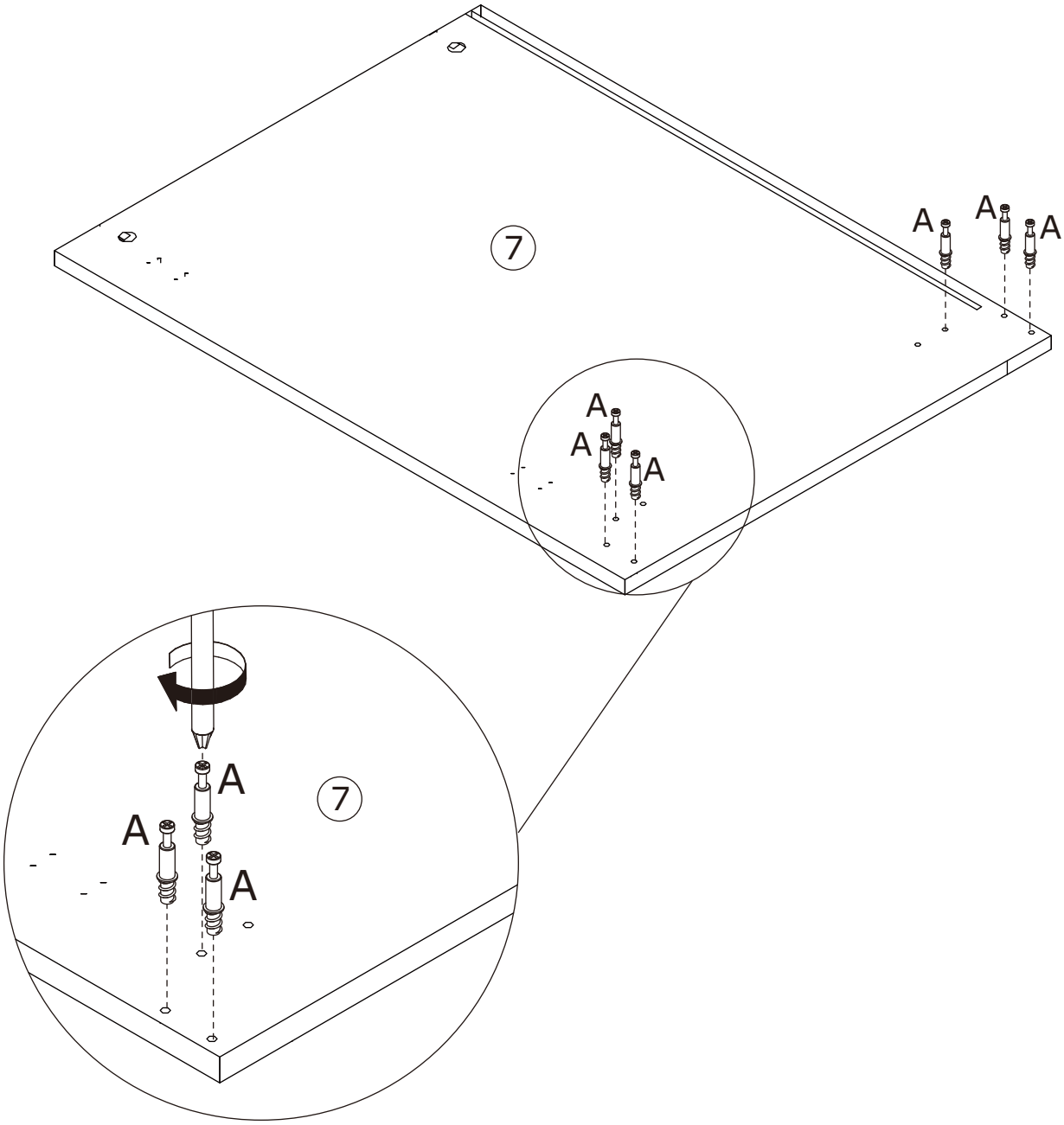

# 6

| B x 6 | C x 2 | |
|---|---|---|
|  |  | 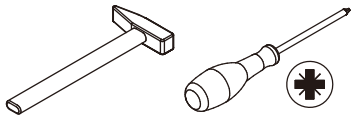 |
| ∅15 x 11 mm | ∅6 x 30 mm | |

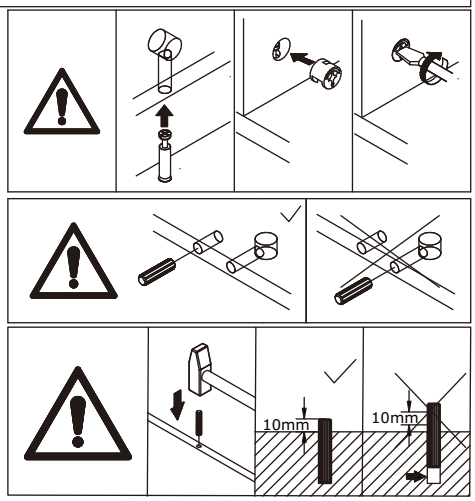


Attach panels 3, 12 to panel 7 with dowels (C) and add eccentric wheels (B) to tighten in a clockwise rotation as shown

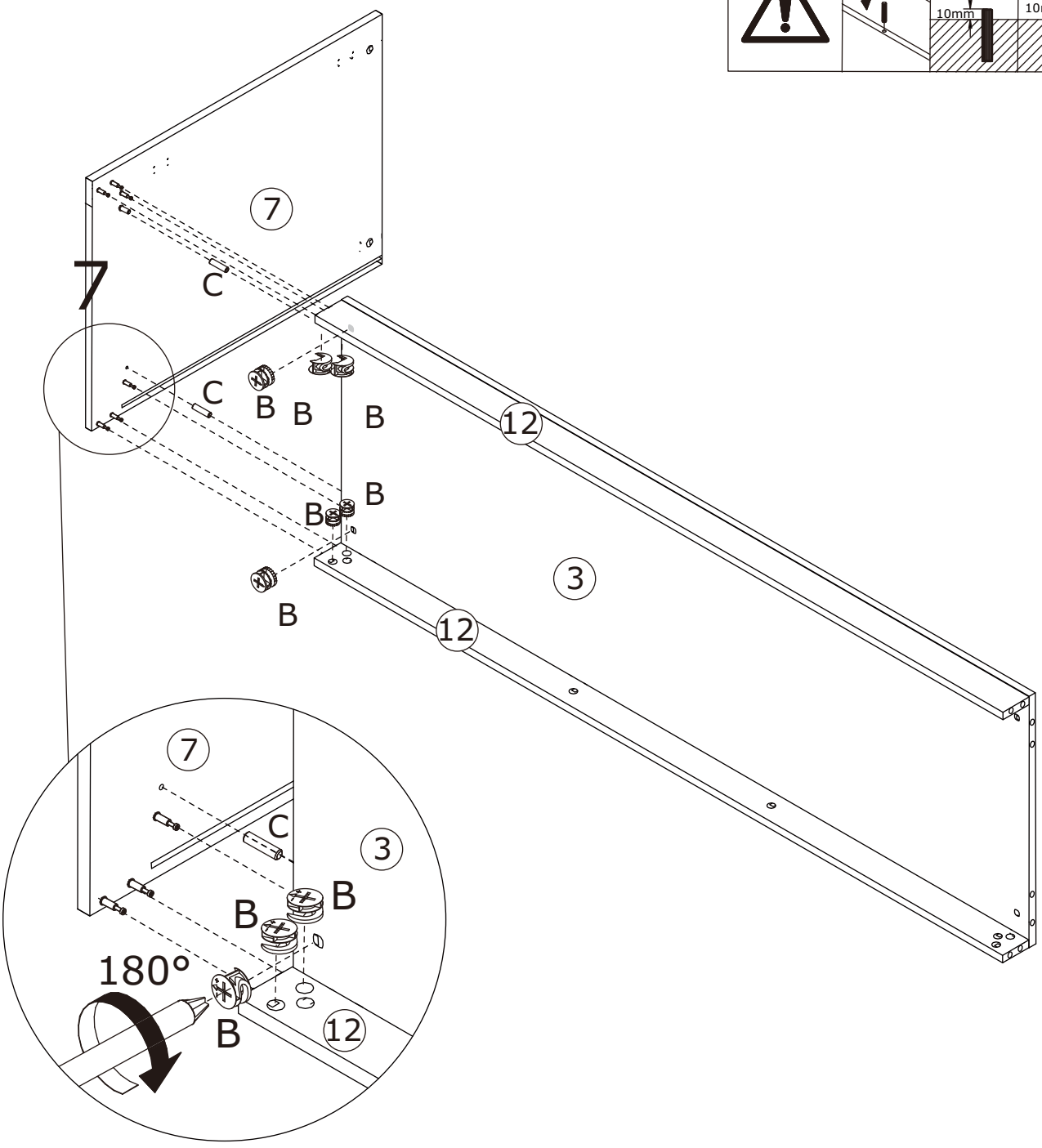

# 7

| B x 6 | C x 2 | |
|---|---|---|
|  |  | 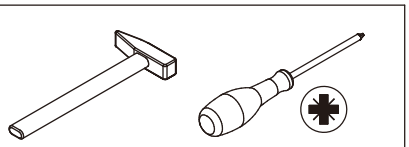 |
| ∅15 x 11 mm | ∅6 x 30 mm | |

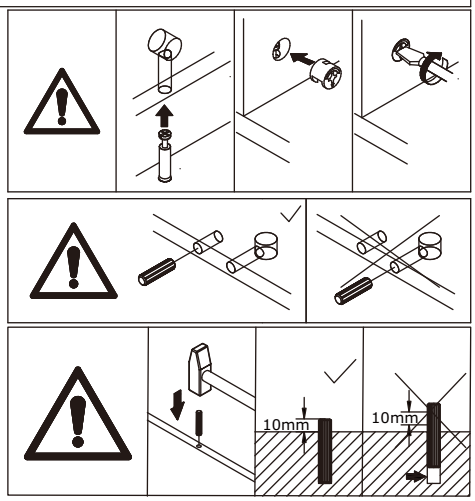


Attach panels 3, 12 to panel 11 with dowels (C) and add eccentric wheels (B) to tighten in a clockwise rotation as shown

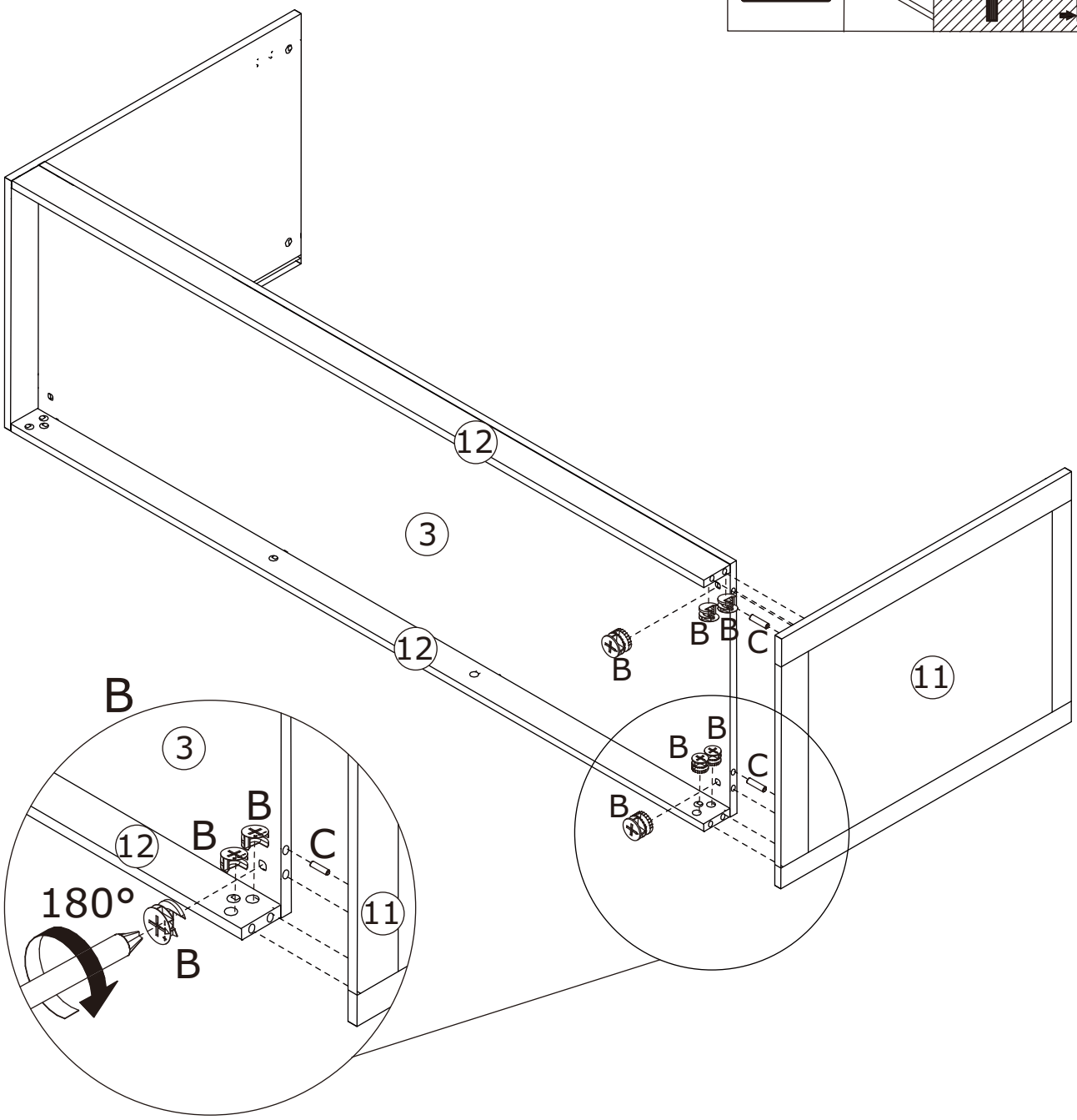

# 8

| C x 4 | V x 4 | |
|---|---|---|
| 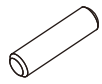 |  | 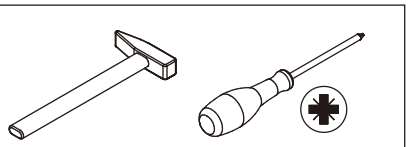 |
| ∅6 x 30 mm | ∅15 x 9.5 mm | |

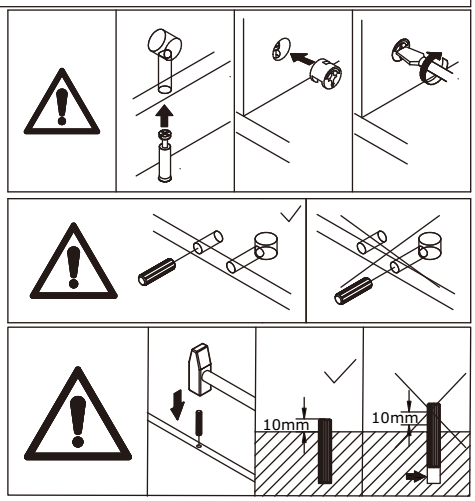





Attach panels 8, 10 to panel 10 with dowels (C) and add eccentric wheels (V) to tighten in a clockwise rotation as shown

9

W x 2

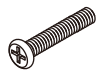

∅6 x 40 mm

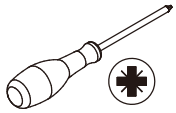

Insert the panels 26, 27 into the combination unit along the available slots as shown.

The steel bars 28 are secured to panels 8, 10 with screws (W) as shown.

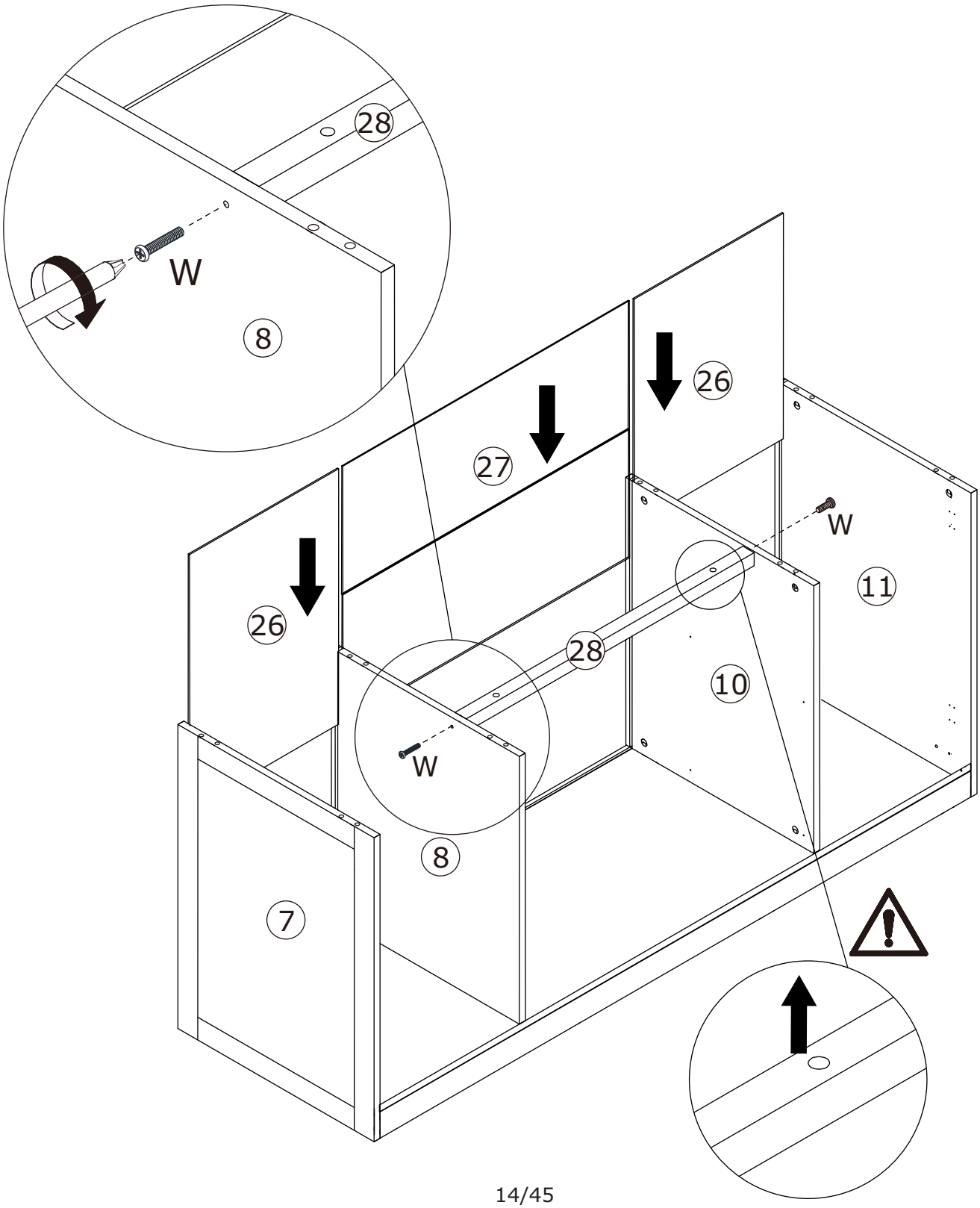

10

A x 6

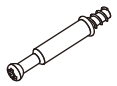

∅6 x 35 mm

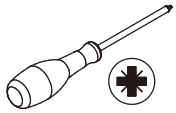

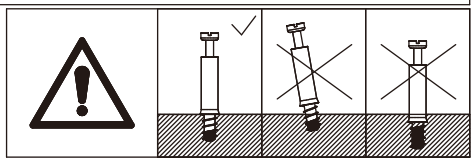

Secure the screw (A) in panel 2 as shown.

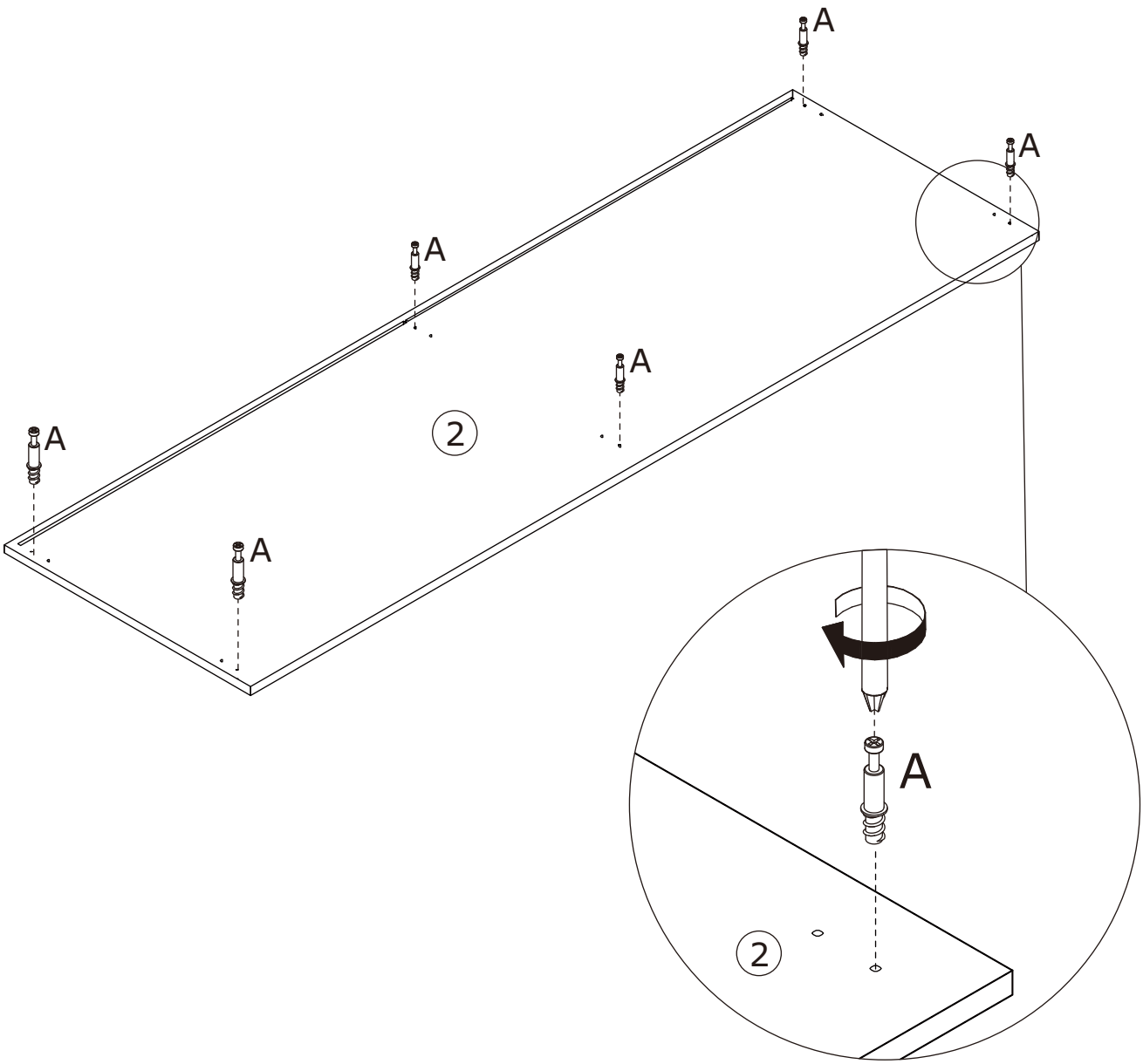

# 11

| C x 6 | V x 6 | |
|---|---|---|
| 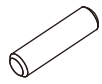 |  | 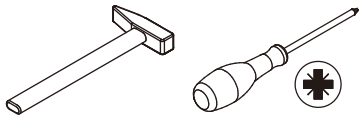 |
| ∅6 x 30 mm | ∅15 x 9.5 mm | |

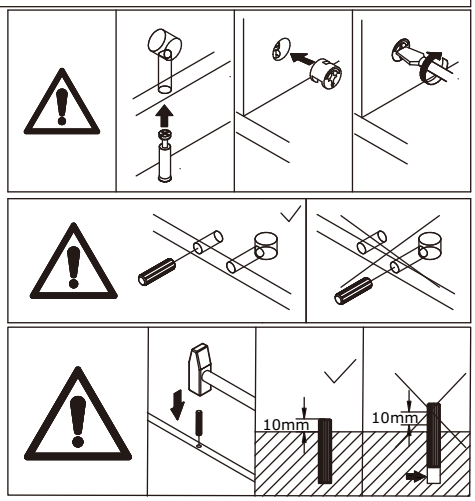





Attach panels 4, 5, 6 to panel 2 with dowels (C) and add eccentric wheels (V) to tighten in a clockwise rotation as shown

# 12

The panel 25 is inserted into the combination unit along the available slot as shown.

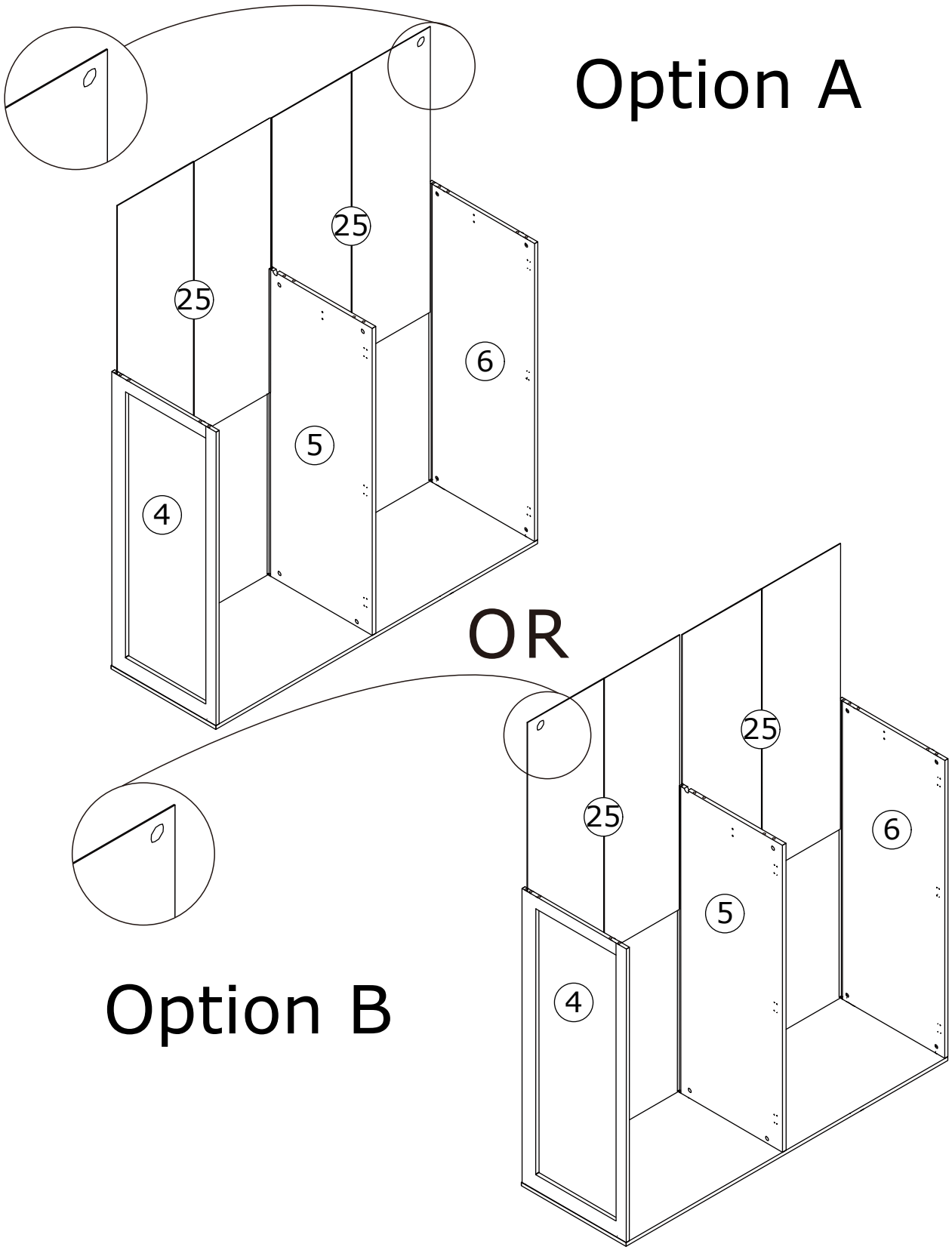

# 13

| A x 6 | E x 4 | Q x 2 | |
|---|---|---|---|
| 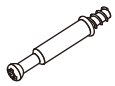 |  | 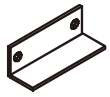 | 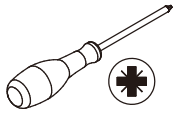 |
| ∅6 x 35 mm | ∅3 x 12 mm | | |

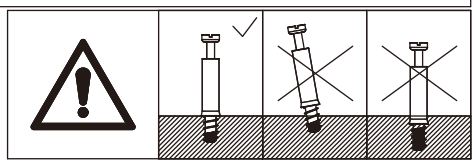

Secure the screw (A) in panel 1 as shown.

Secure the fitting (Q) to panel 1 with screws (E) as shown.

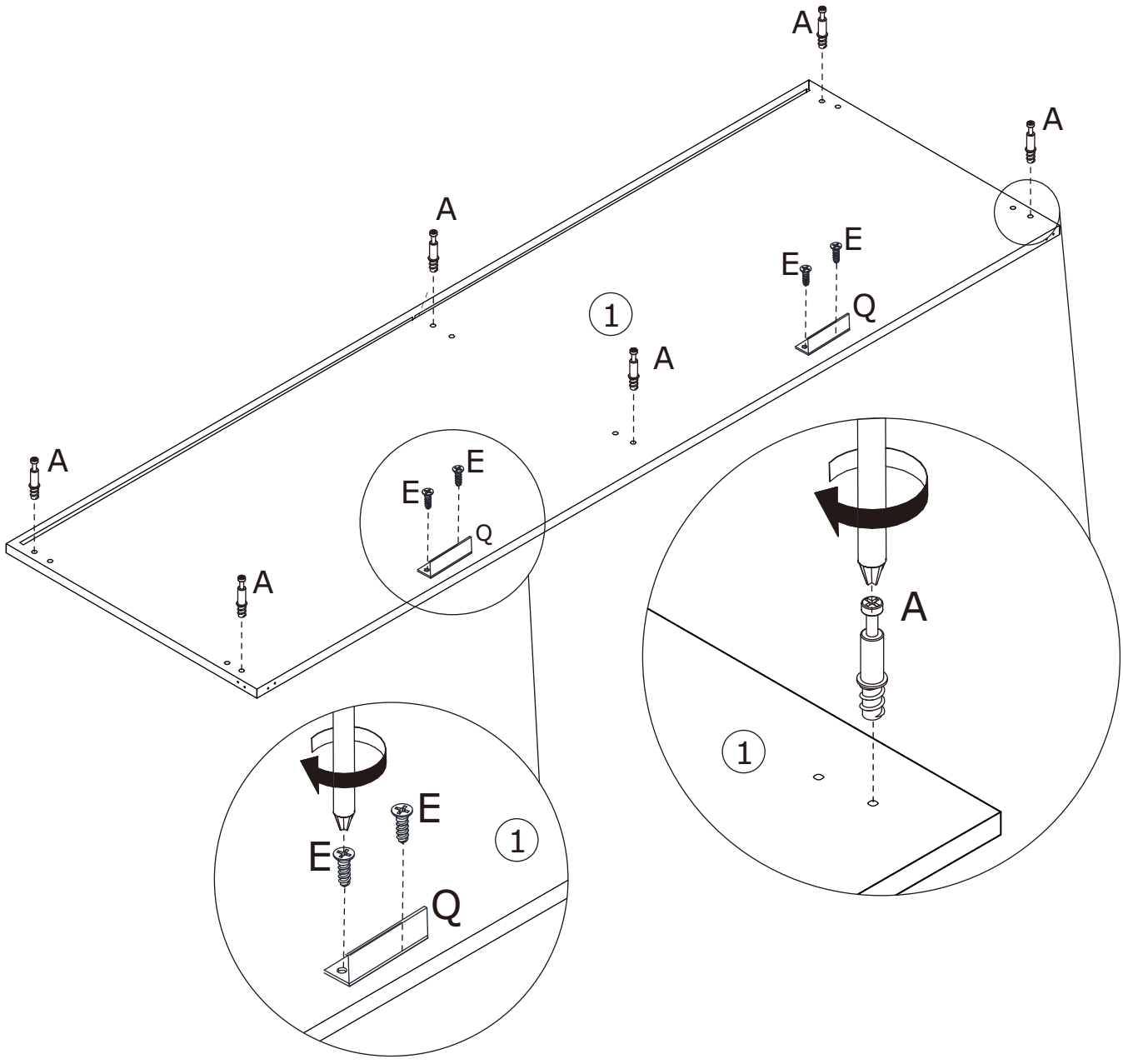

14

| E x 8 | T x 4 | |
|---|---|---|
| ∅3 x 12 mm | | |

Tear off the backing adhesive behind the light strip 30, stick it to panel 1, and fix the light strip 30 with screws (E)and fittings (T).

Option B

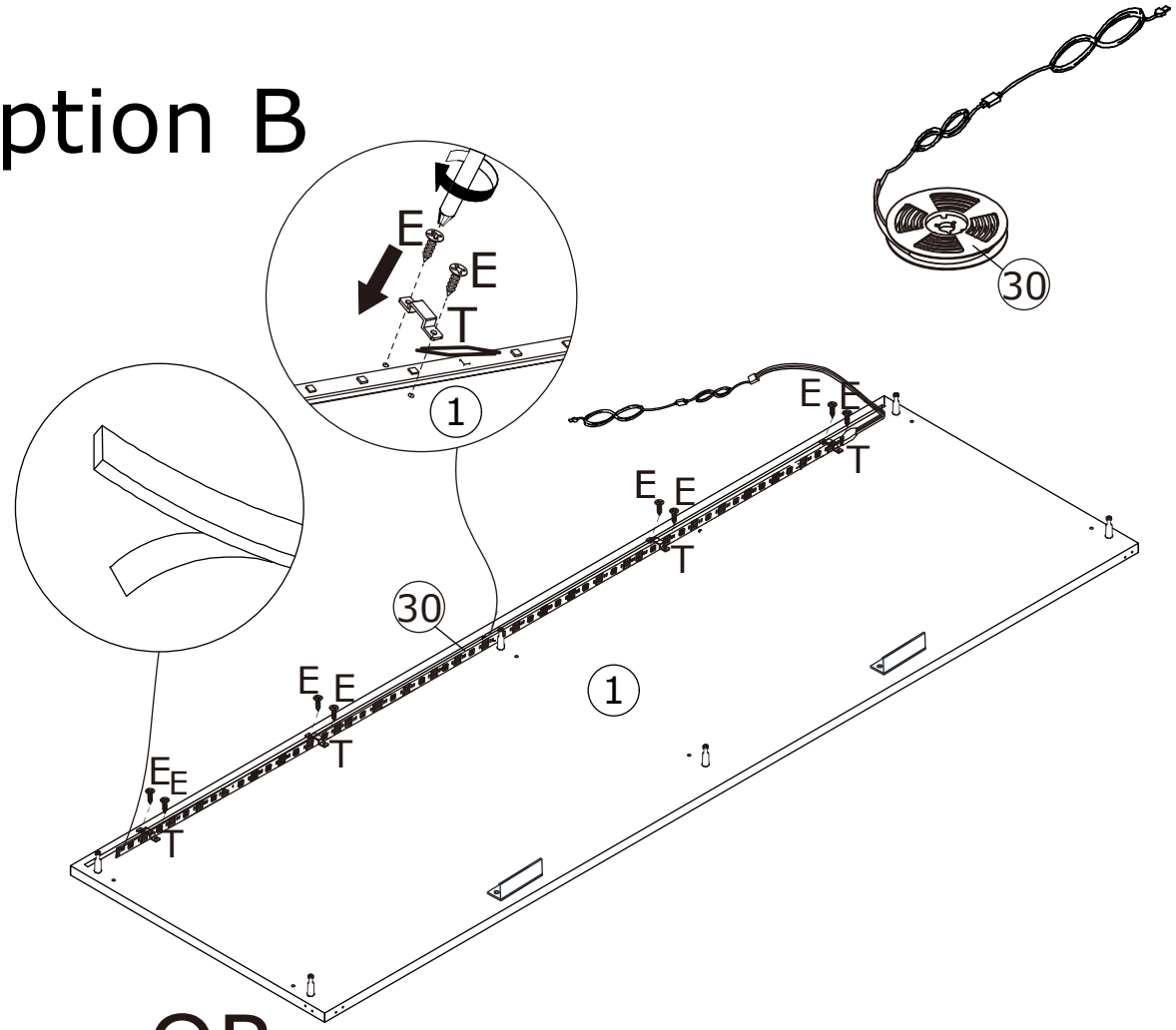


OR

Option A

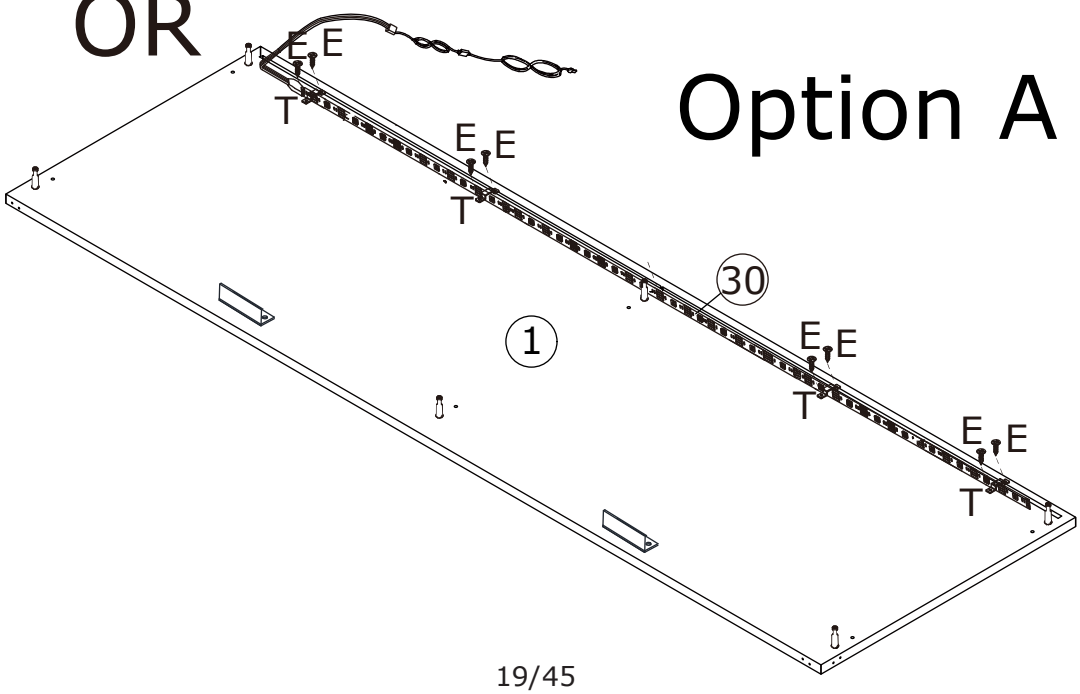

# 15

| C x 6 | V x 6 | |
|---|---|---|
| 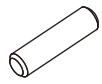 |  | 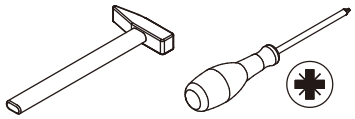 |
| ∅6 x 30 mm | ∅15 x 9.5 mm | |

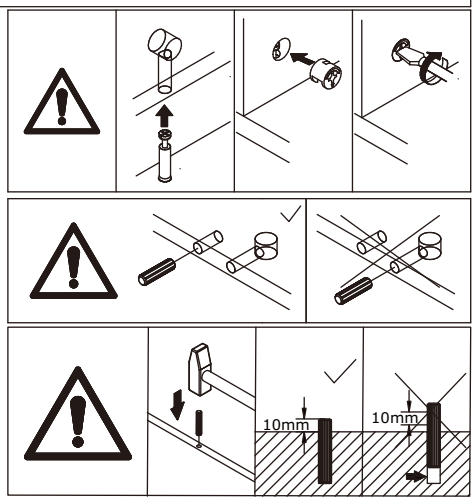





Attach panels 4, 5, 6 to panel 1 with dowels (C) and add eccentric wheels (V) to tighten in a clockwise rotation as shown

# 16

A x 8

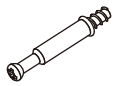

∅6 x 35 mm

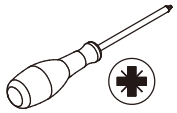

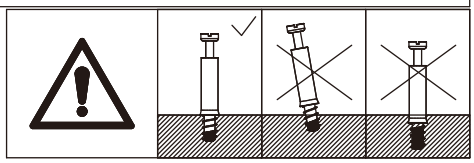

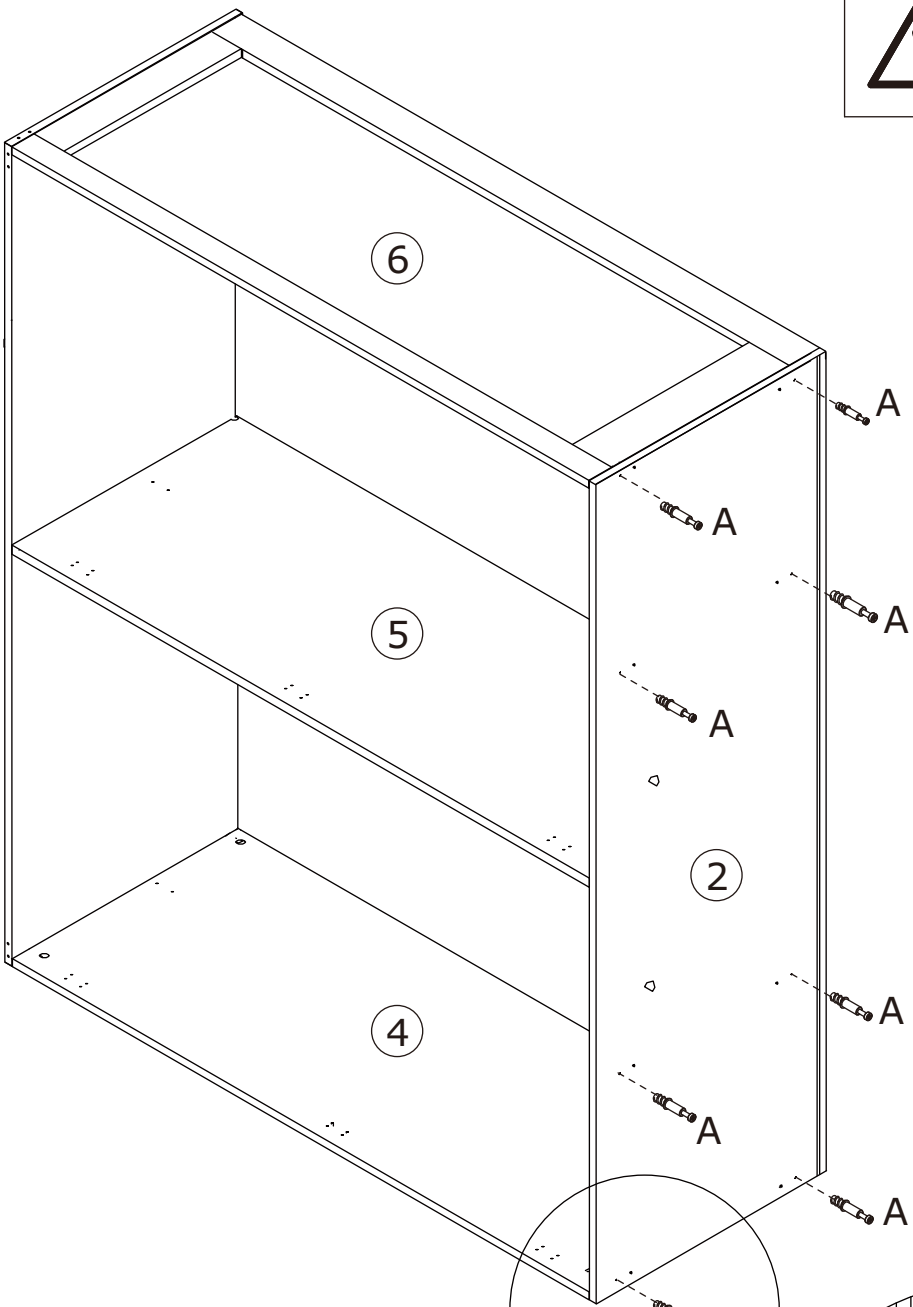


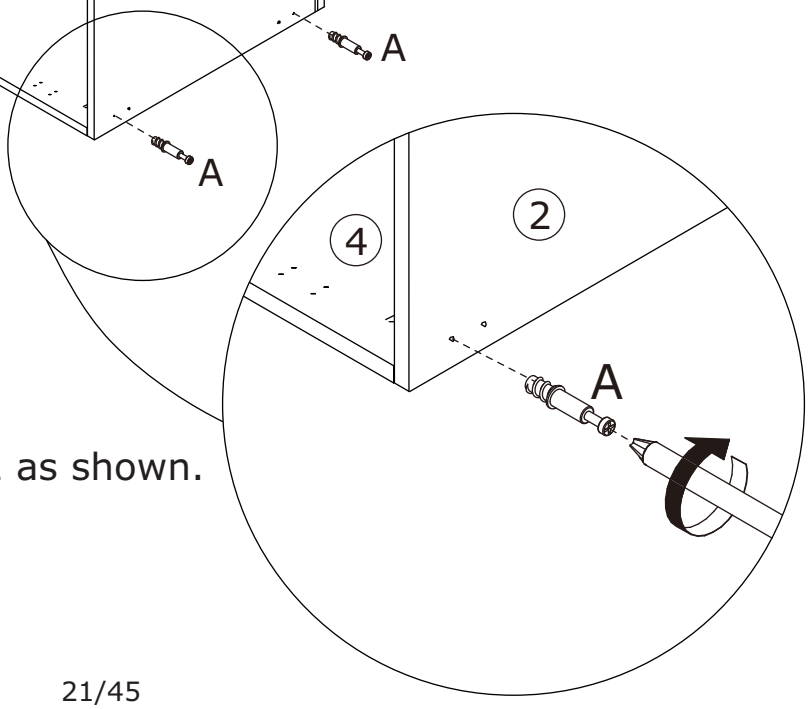


Secure the screw (A) in panel 2 as shown.

# 17

| C x 8 | V x 8 | W x 2 | |
|---|---|---|---|
| 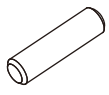 |  | 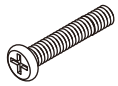 | 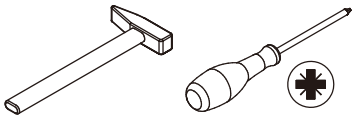 |
| ∅6 x 30 mm | ∅15 x 9.5 mm | ∅6 x 40 mm | |

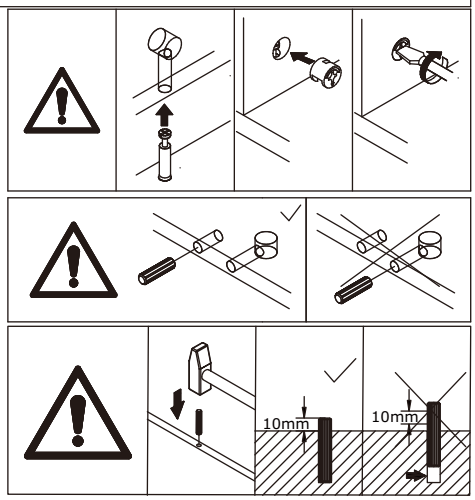





Attach panels 7, 8, 10, 11 to panel 2 with dowels (C) and add eccentric wheels (V) to tighten in a clockwise rotation as shown.

The steel bar 28 is secured to panel 2 with screws (W) as shown.

# 18

| D x 2 | E x 16 | |
|---|---|---|
| 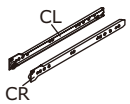  L = 350 mm |  ∅3 x 12 mm | 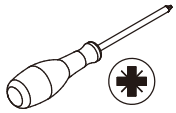 |













Secure the rails (D-CL) and (D-CR) to panels 8 and 10, respectively, with screws (E) as shown.

19

S x 2

E x 8

∅3 x 12 mm

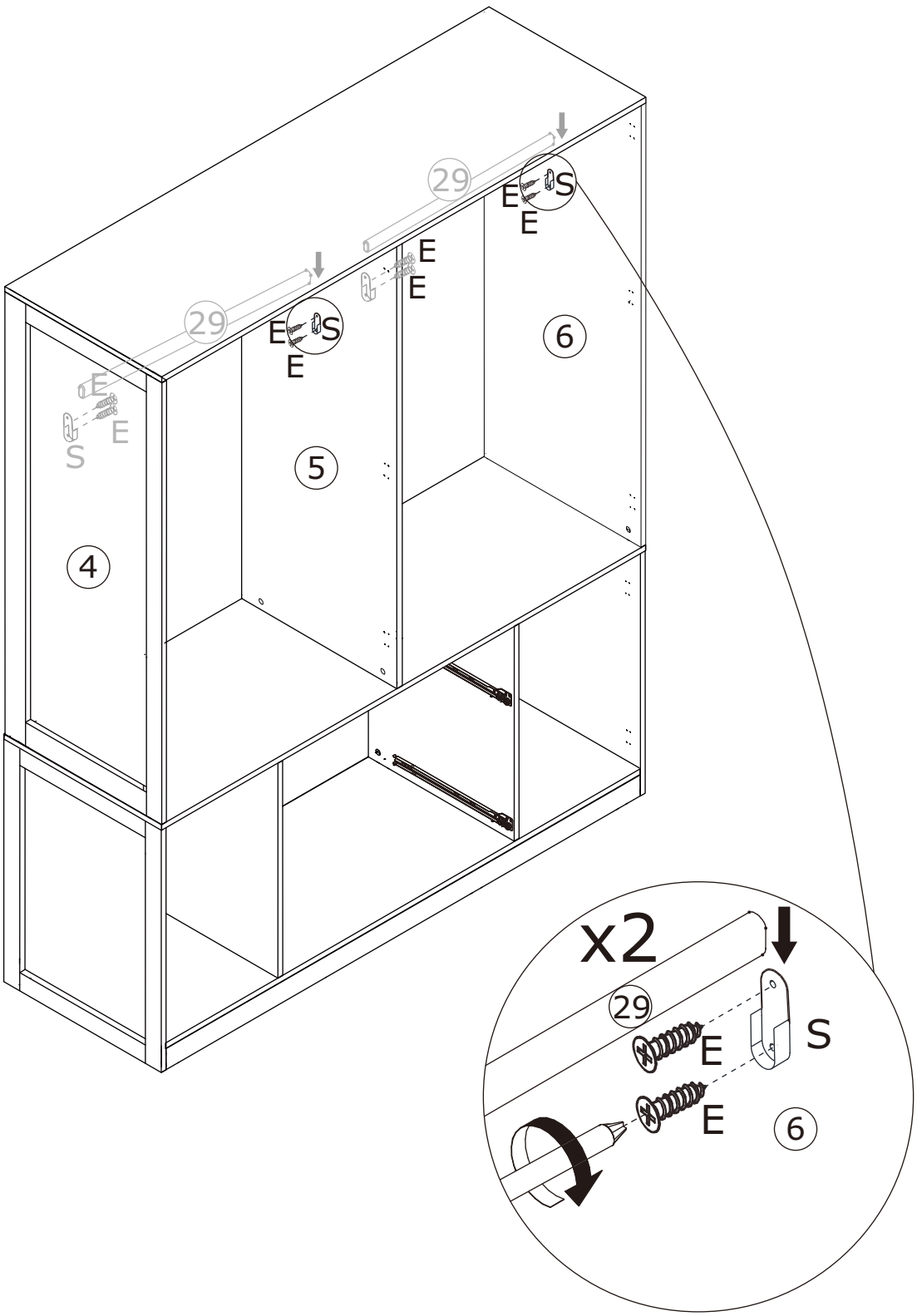


Secure the clothes bar rests (S) to panels 4, 5, 6 with screws (E) and place the clothing bar 28 as shown.

20

| G x 1 | J x 3 | K x 6 | L x 2 | P x 1 | |
|---|---|---|---|---|---|
|  |  |  ∅3.5 x 14 mm |  ∅4 x 22 mm |  | 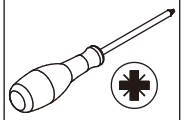 |

Secure the hinge (J) to panel 13 with screws (K) as shown.
Secure fittings (P) and pulls (G) to panel 13 with screws (L) as shown.

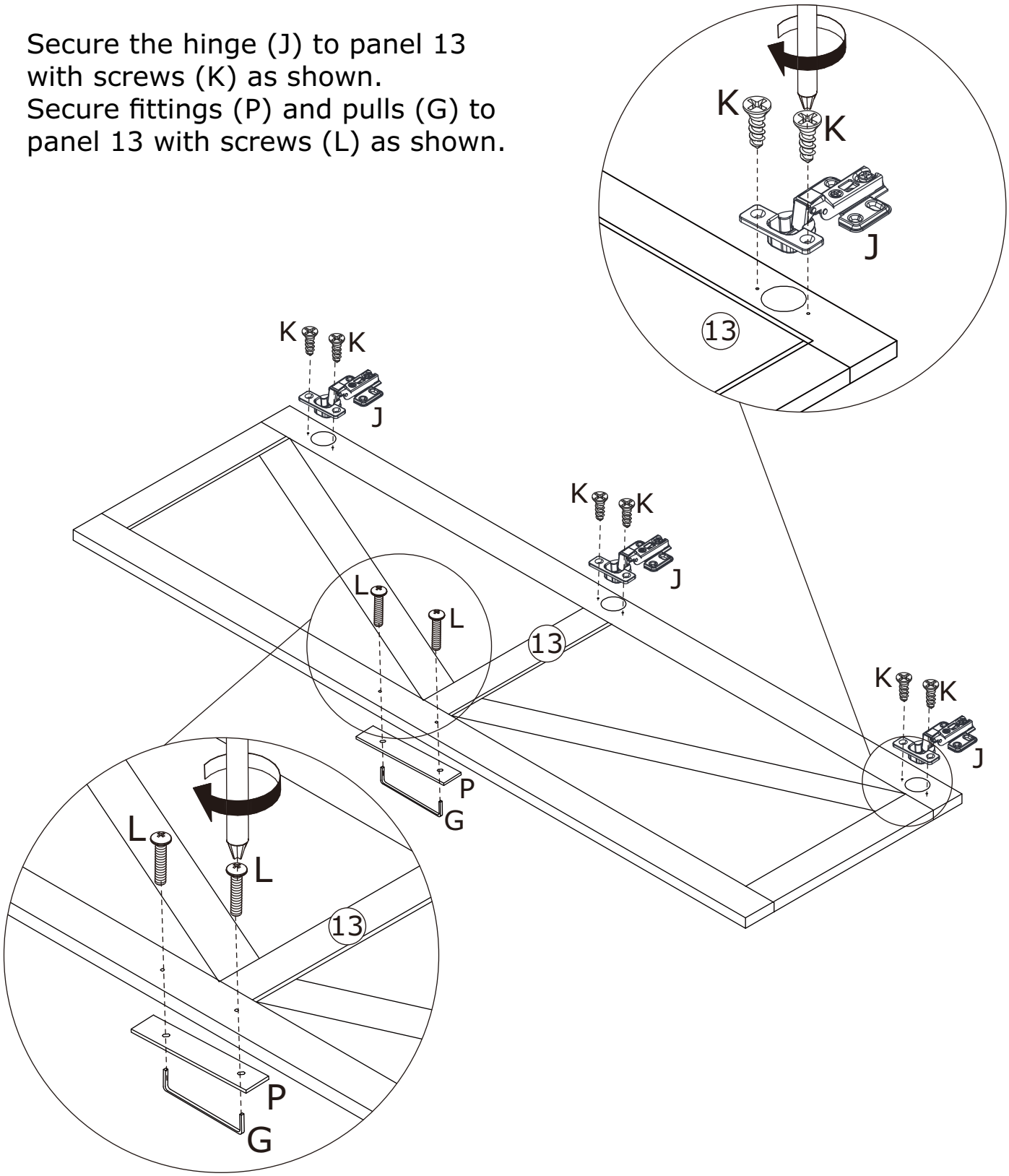

# 21

| G x 1 | K x 6 | L x 2 | P x 1 | U x 3 | |
|---|---|---|---|---|---|
|  |  ∅3.5 x 14 mm |  ∅4 x 22 mm | 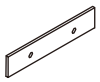 | 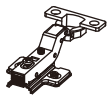 | 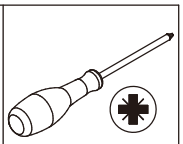 |

Secure the hinge (U) to panel 14 with screws (K) as shown.
Secure fittings (P) and pulls (G) to panel 14 with screws (L) as shown.

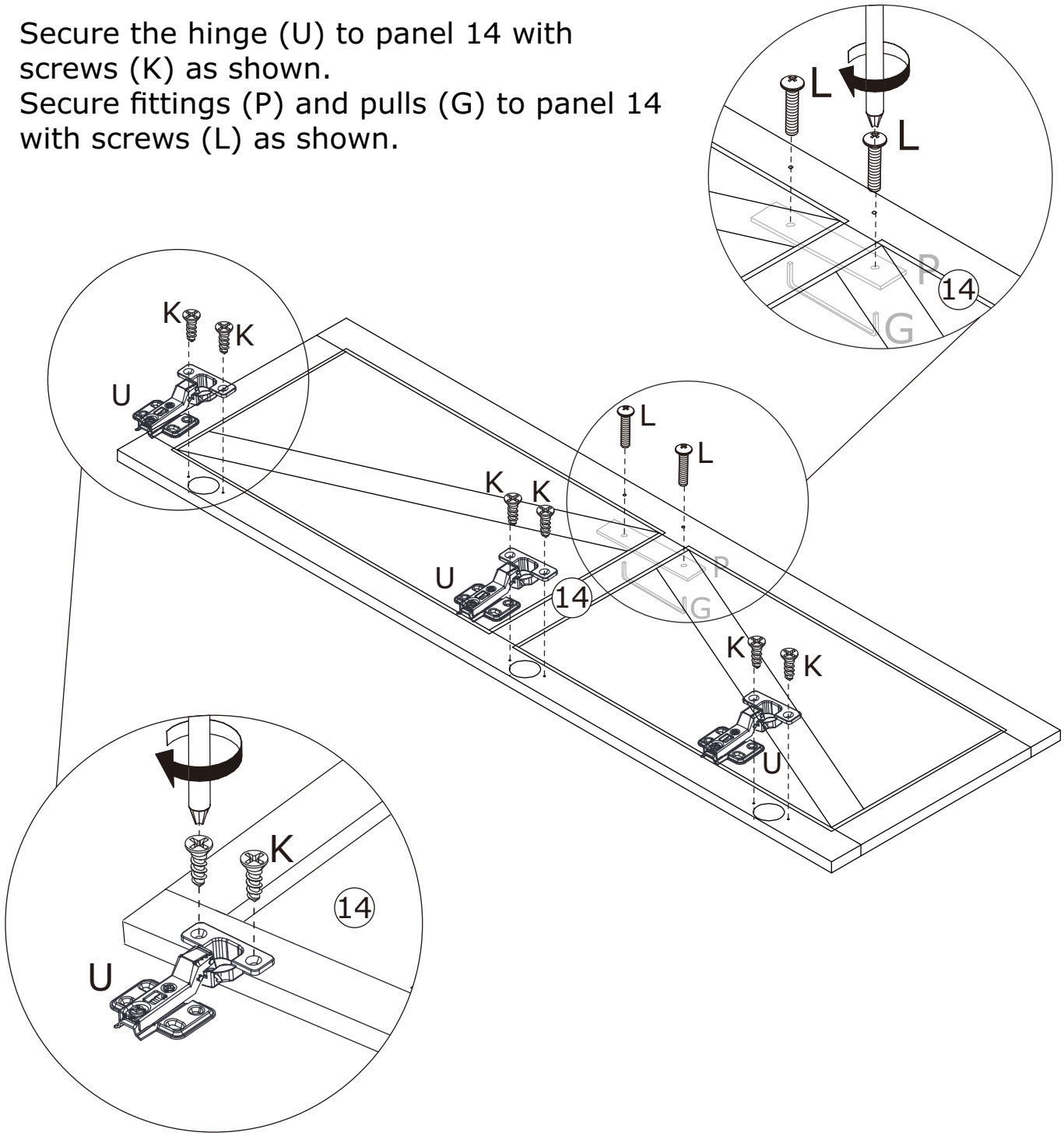

22

K x 24

∅3.5 x 14 mm

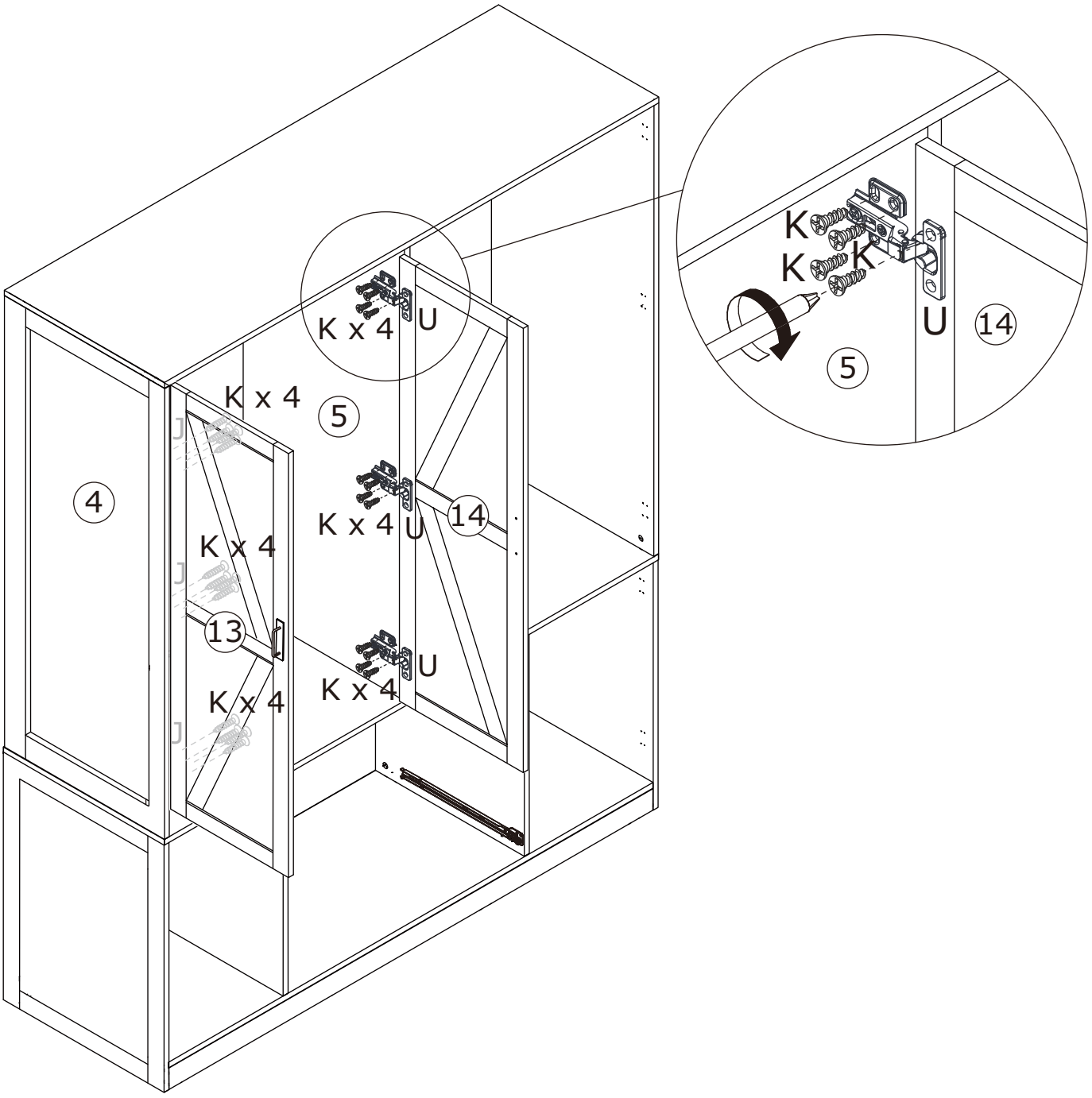


Secure panel 13 to panel 4 with screws (K) as shown.
Secure panel 14 to panel 5 with screws (K) as shown.

# 23

| G x 1 | K x 6 | L x 2 | P x 1 | U x 3 | |
|---|---|---|---|---|---|
|  |  ∅3.5 x 14 mm |  ∅4 x 22 mm | 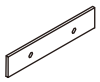 | 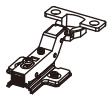 | 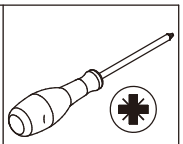 |

Secure the hinge (U) to panel 15 with screws (K) as shown.
Secure fittings (P) and pulls (G) to panel 15 with screws (L) as shown.

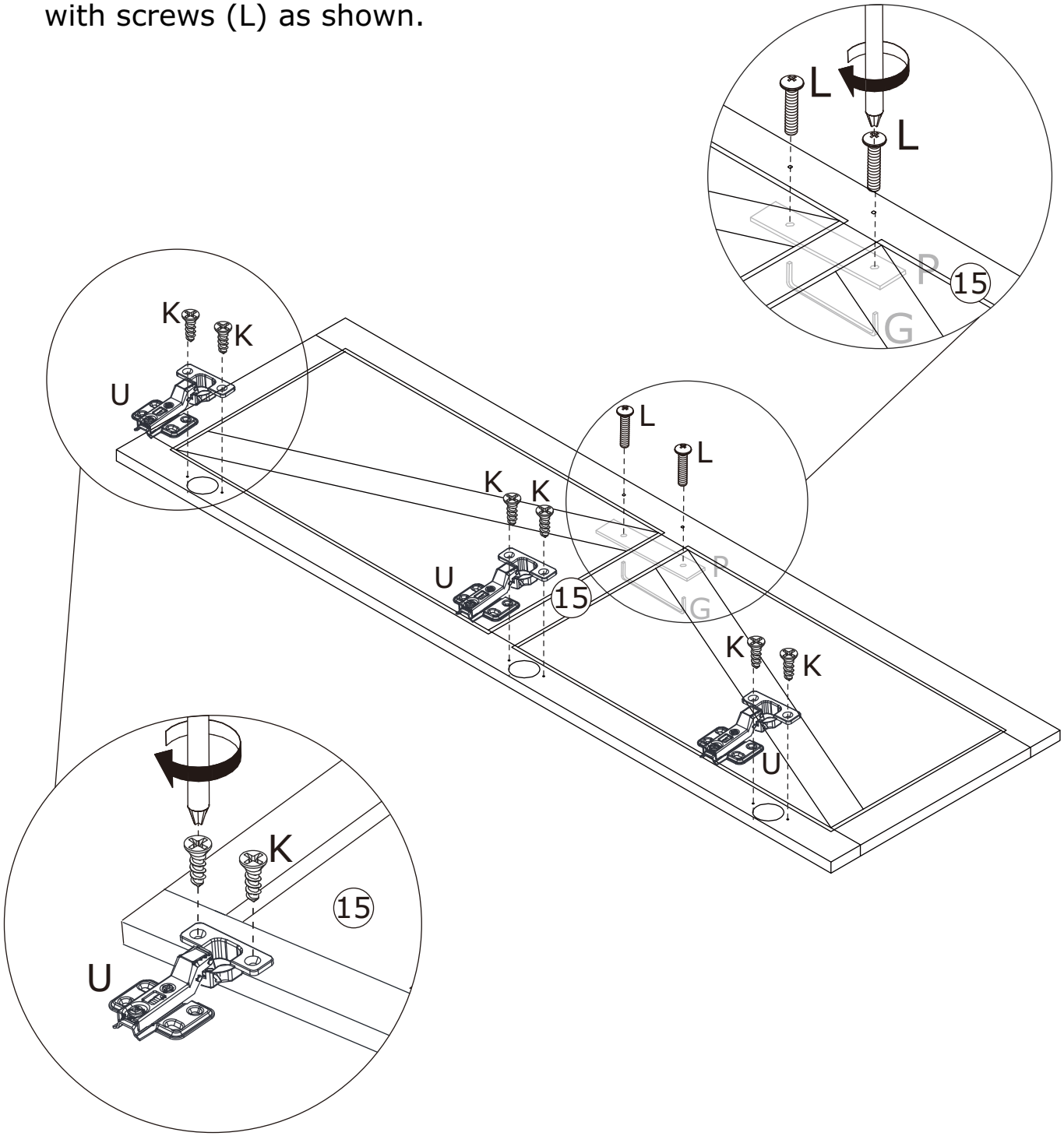

# 24

| G x 1 | J x 3 | K x 6 | L x 2 | P x 1 | |
|---|---|---|---|---|---|
|  |  |  ∅3.5 x 14 mm |  ∅4 x 22 mm |  | 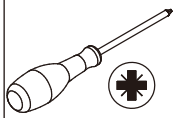 |

Secure the hinge (J) to panel 16 with screws (K) as shown.
Secure fittings (P) and pulls (G) to panel 16 with screws (L) as shown.

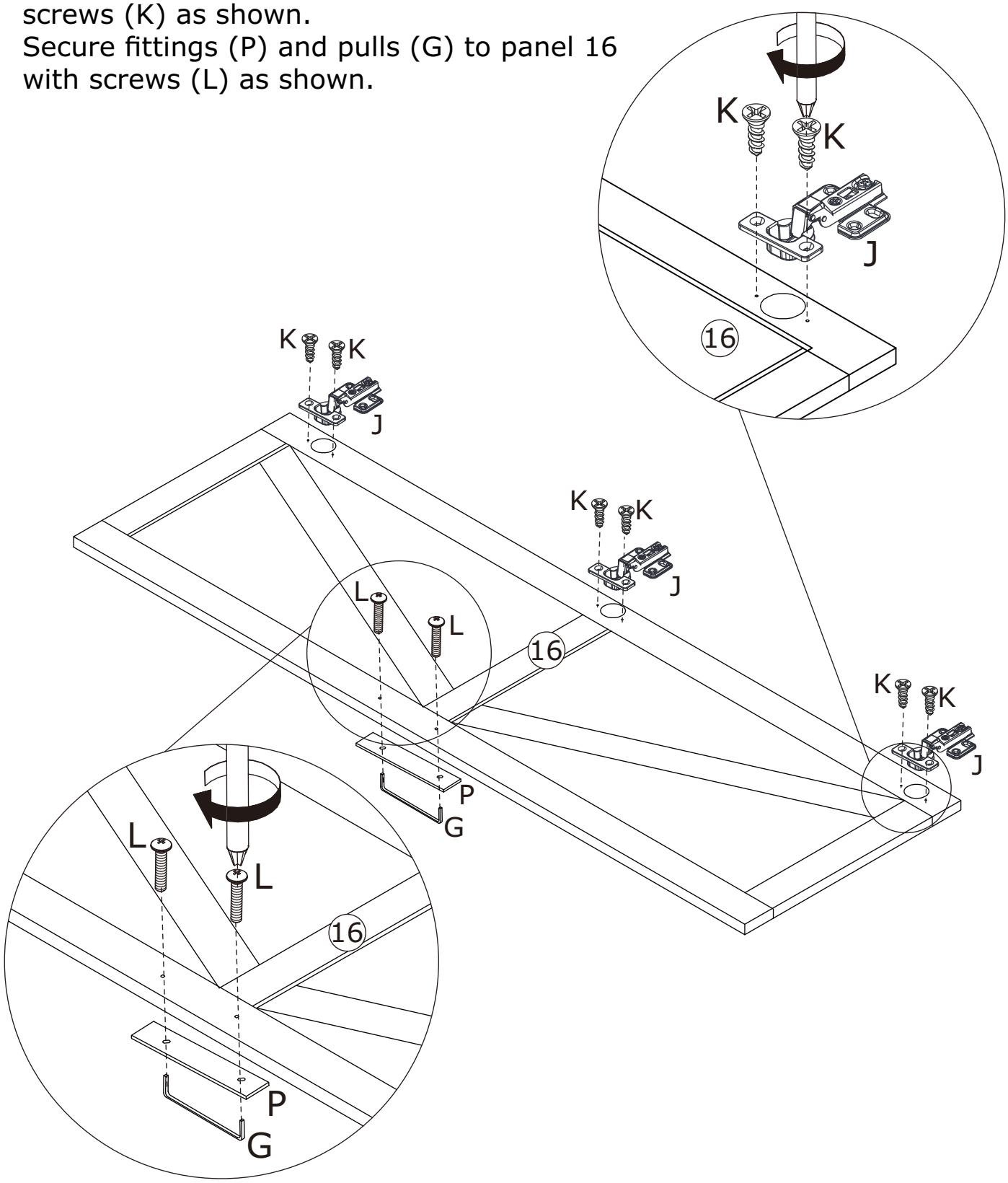

25

K x 24



∅3.5 x 14 mm

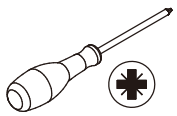

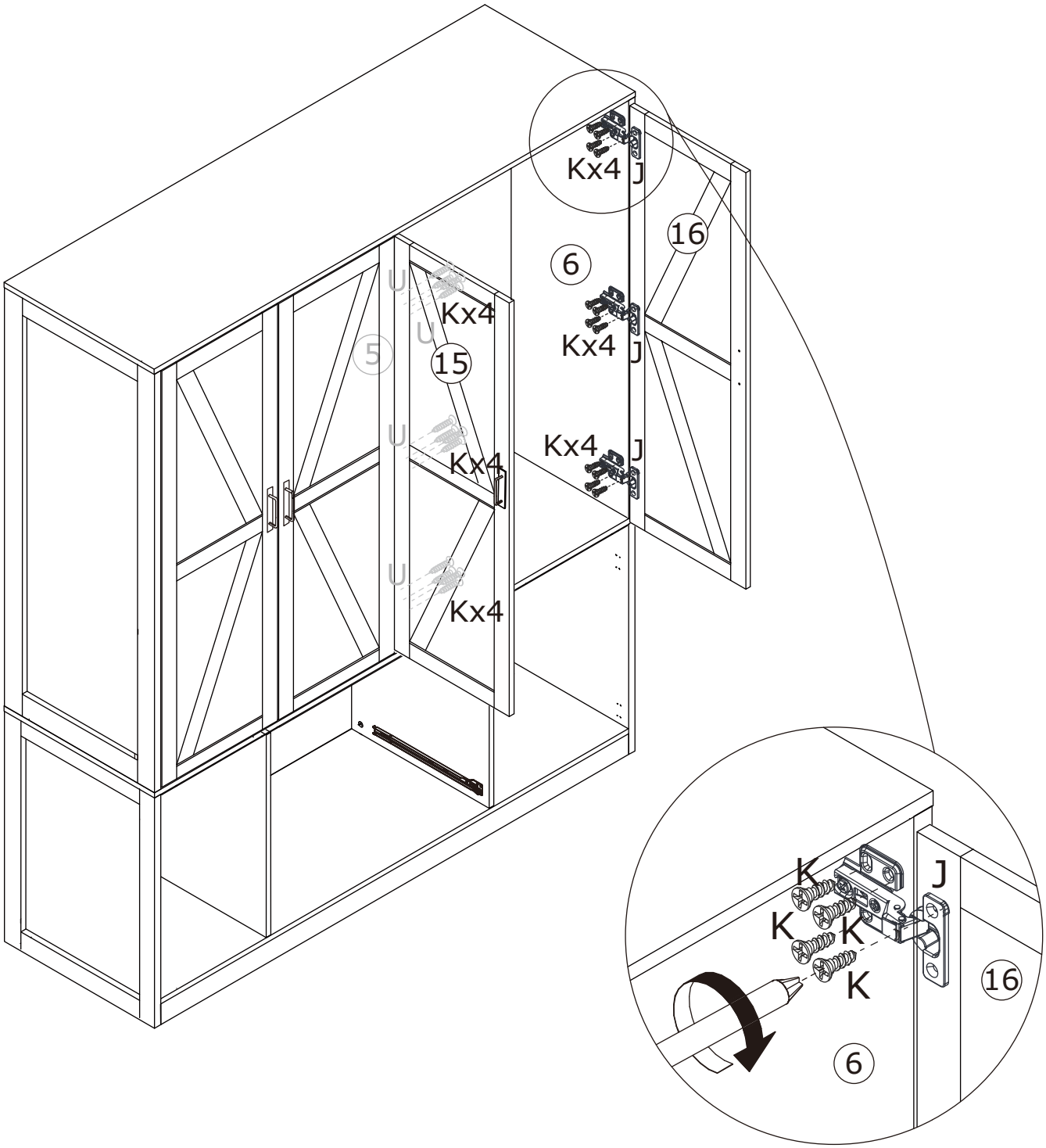


Secure panel 16 to panel 6 with screws (K) as shown.
Secure panel 15 to panel 5 with screws (K) as shown.

# 26

| G x 1 | J x 3 | K x 4 | L x 2 | P x 1 | |
|---|---|---|---|---|---|
|  |  |  ∅3.5 x 14 mm |  ∅4 x 22 mm |  | 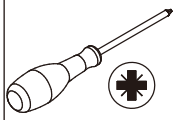 |

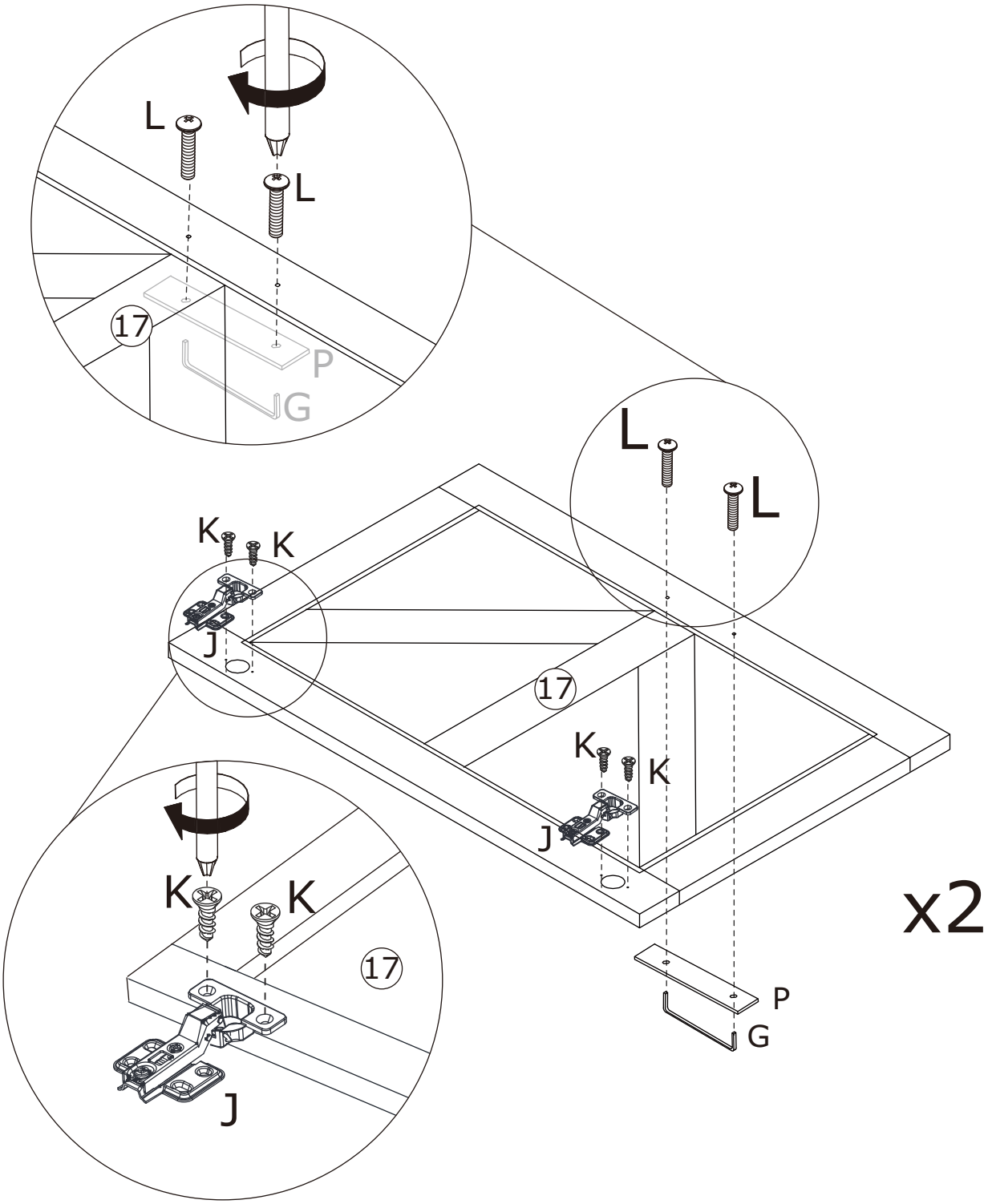


Secure the hinge (J) to panel 17 with screws (K) as shown.
Secure fittings (P) and pulls (G) in panel 17 with screws (L) as shown.

27

K x 16



∅3.5 x 14 mm

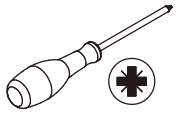

Secure panels 17 to panel 7, 11 with screws (K) as shown.

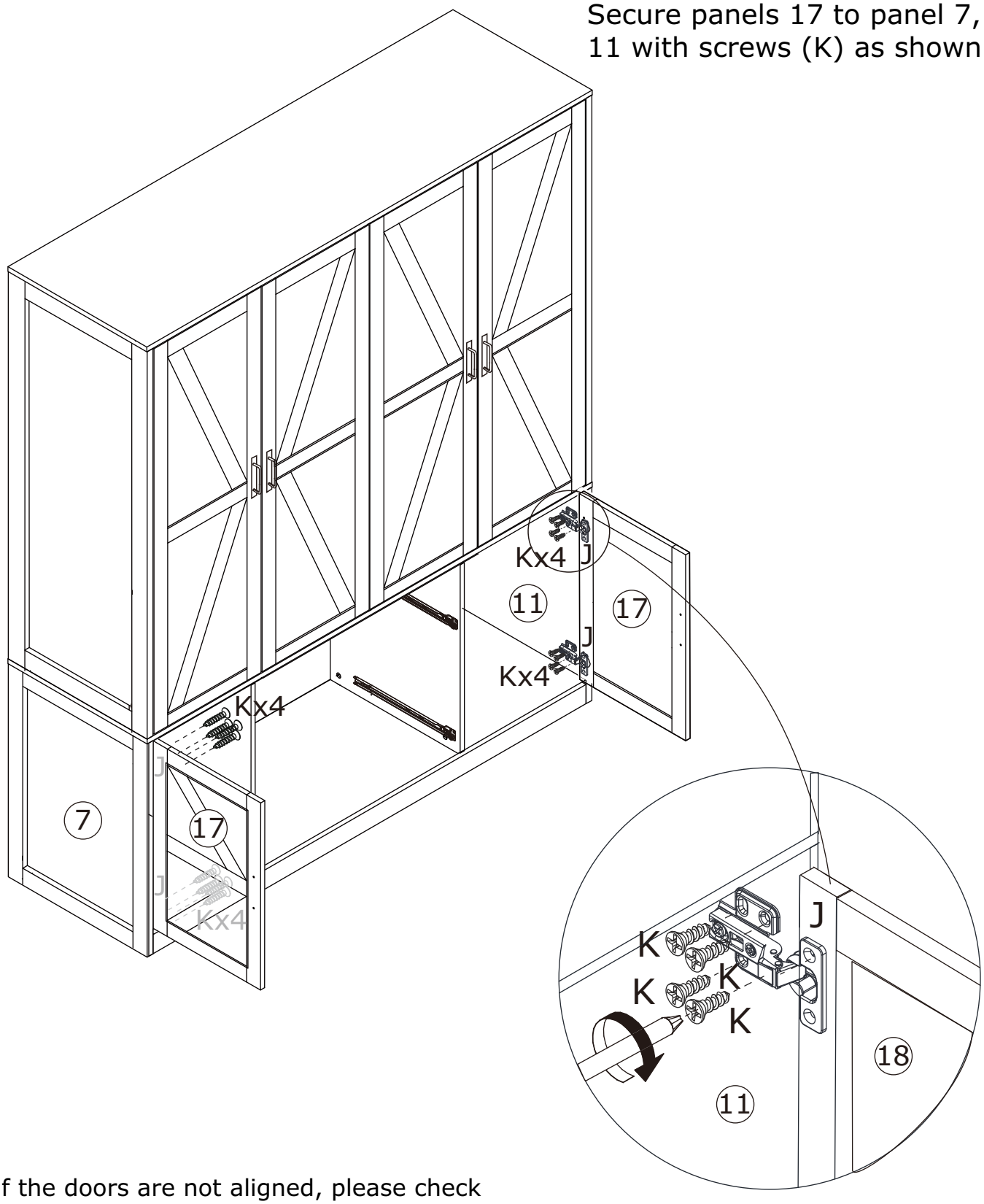


If the doors are not aligned, please check whether the hinges have been correctly installed on the corresponding door panels. Because these are two different types of hinges, they cannot be installed randomly.

# 28

A x 4



∅6 x 35 mm

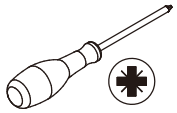

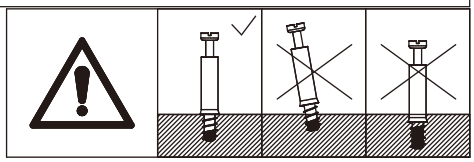

Secure the screw (A) in panel 21 as shown.

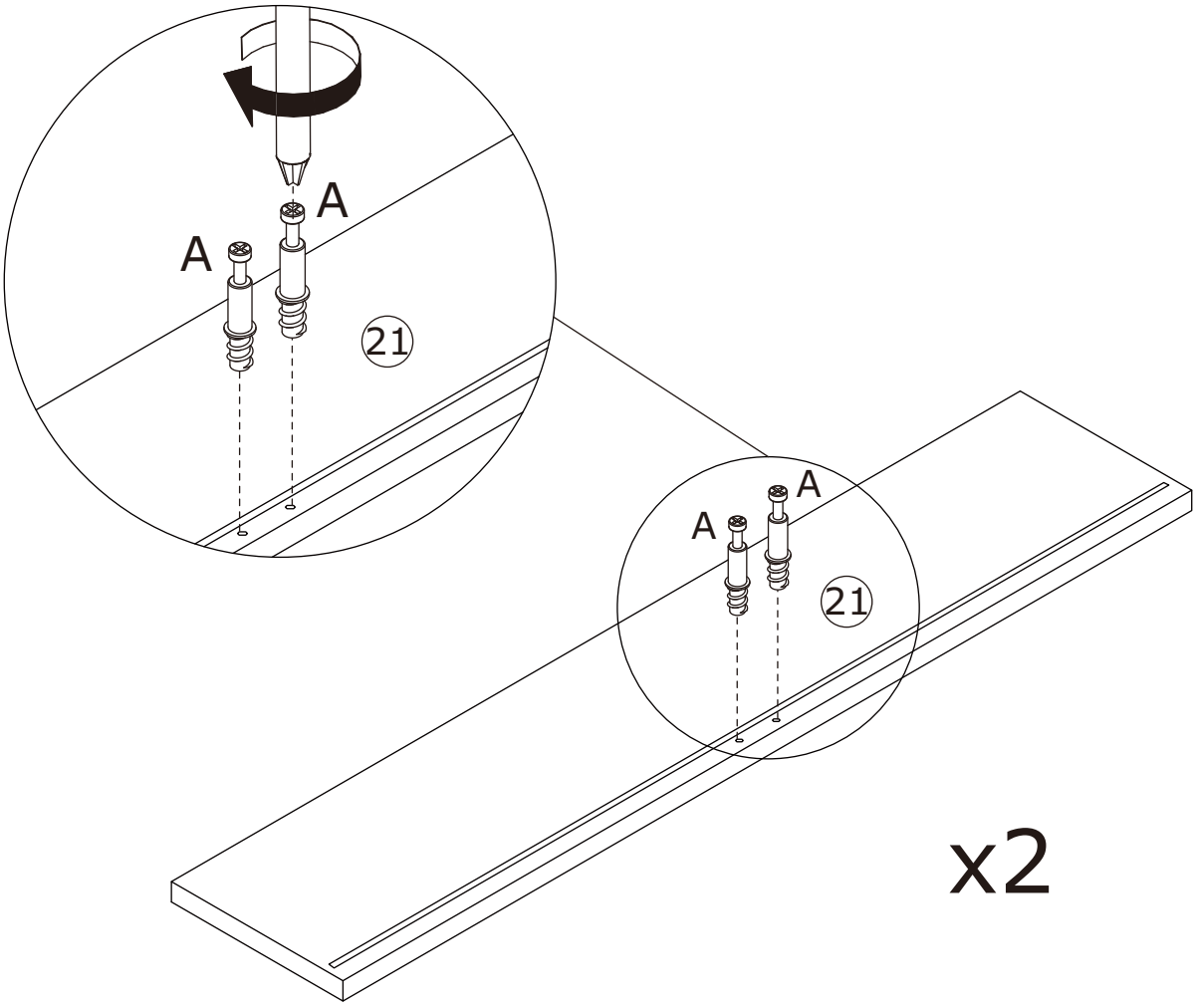

29

A x 12



∅6 x 35 mm

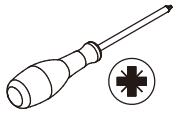

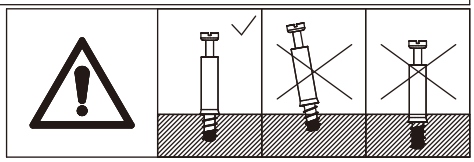

Secure the screw (A) in panel 24 as shown.

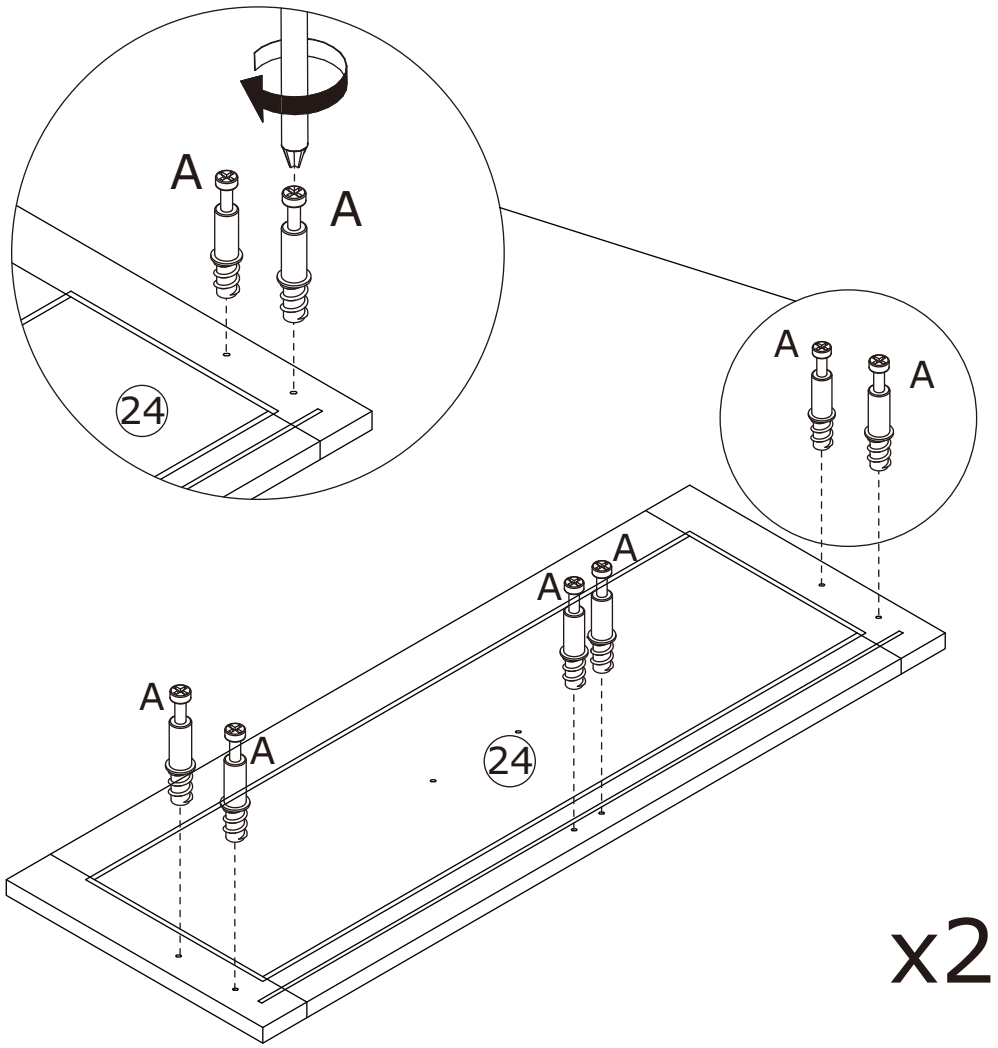


x2

30

F x 8



∅4 x 30 mm

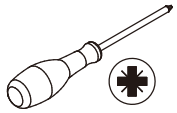

Secure panels 19, 20 to panel 21 with screws (F) as shown.

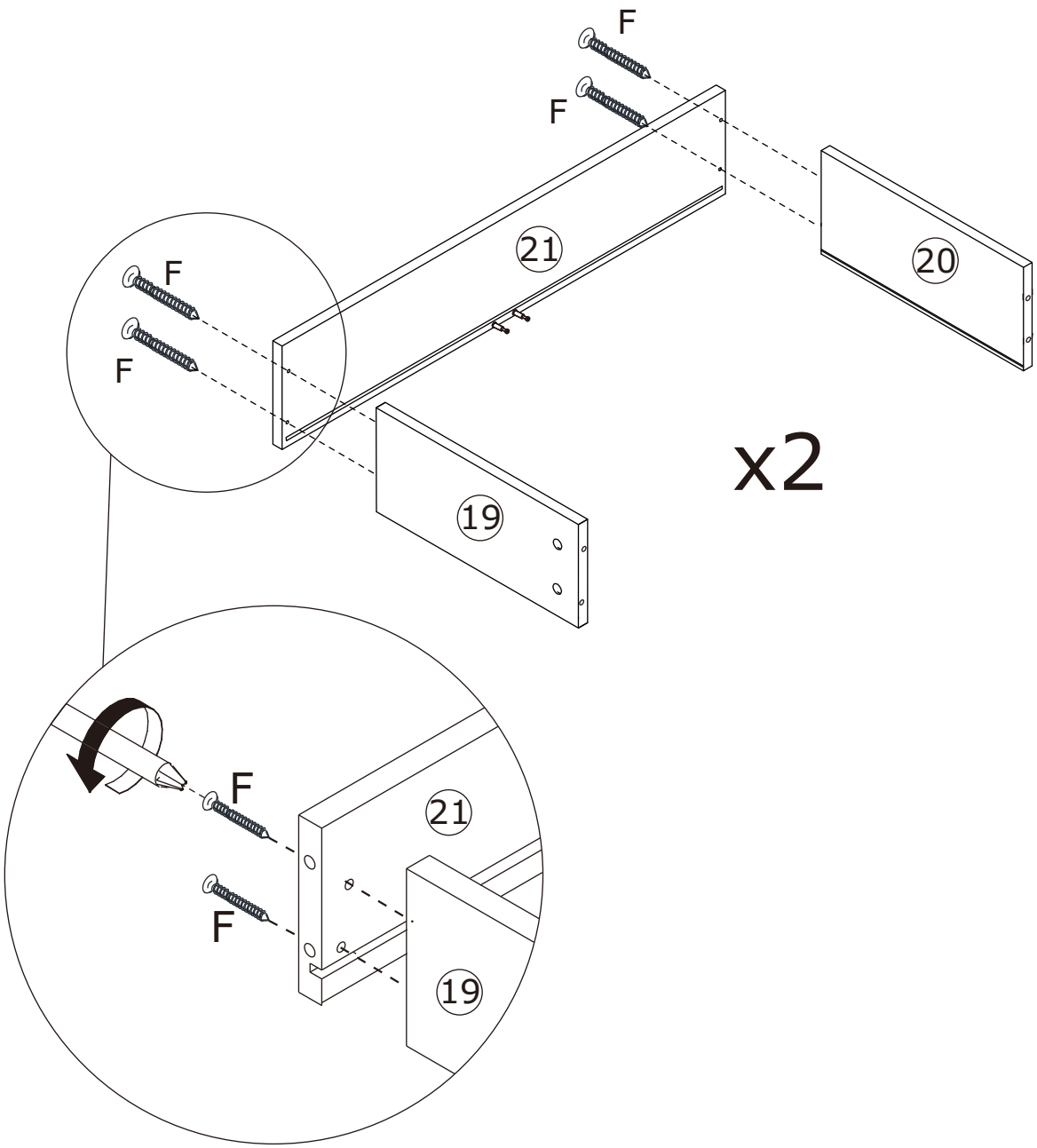

31

Insert the panel 22 into the combination unit along the available slots as shown.

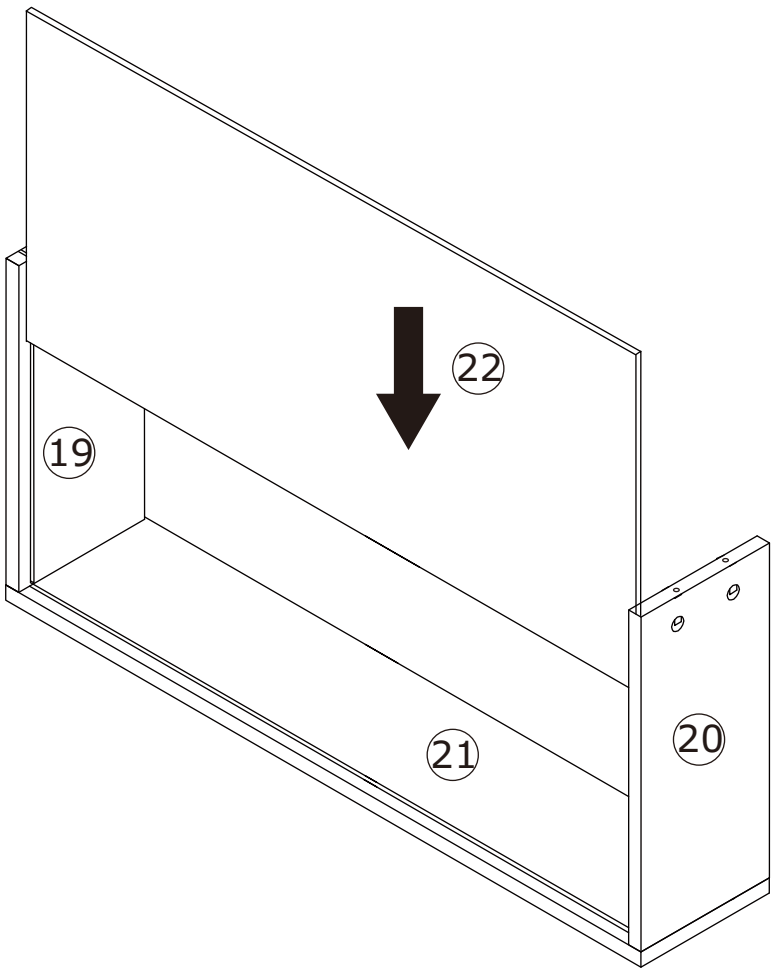

32

V x 4



∅15 x 9.5 mm

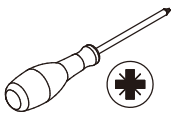

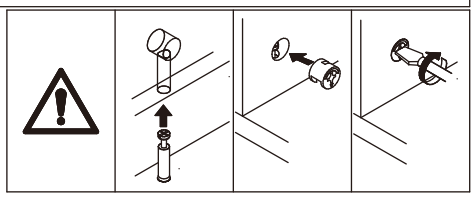

Attach panel 23 to panel 21 and add the eccentric wheel (V) to tighten in clockwise rotation.

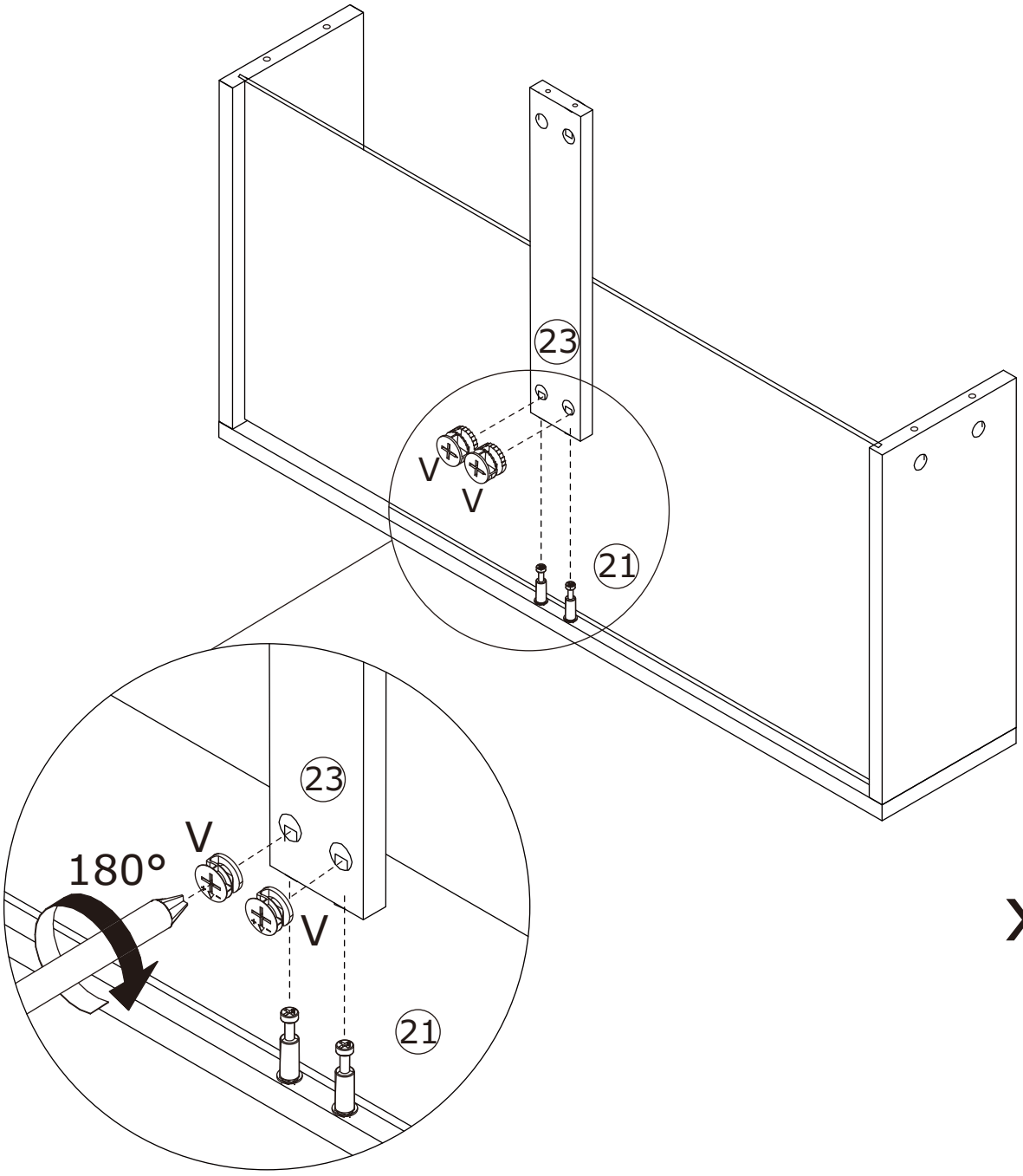


x2

33

| G x 1 | H x 2 | P x 1 | V x 12 | |
|---|---|---|---|---|
| | ∅4 x 12 mm | | ∅15 x 9.5 mm | |

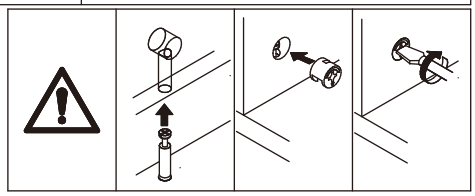

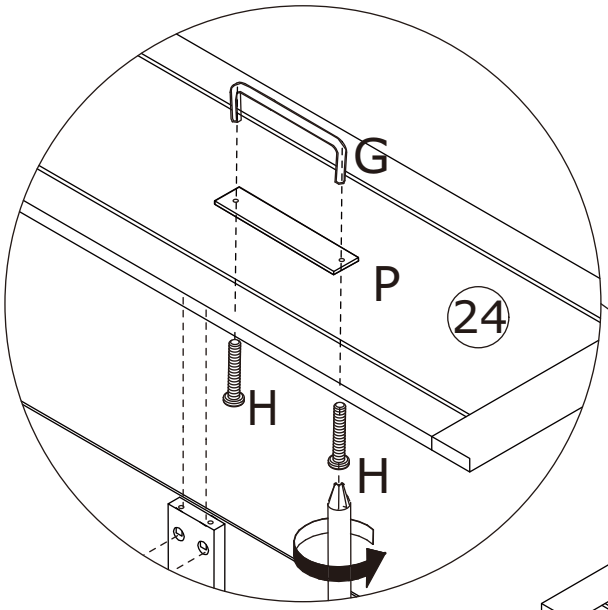


Secure fittings (P) and pulls (G) to panel 24 with screws (H) as shown.

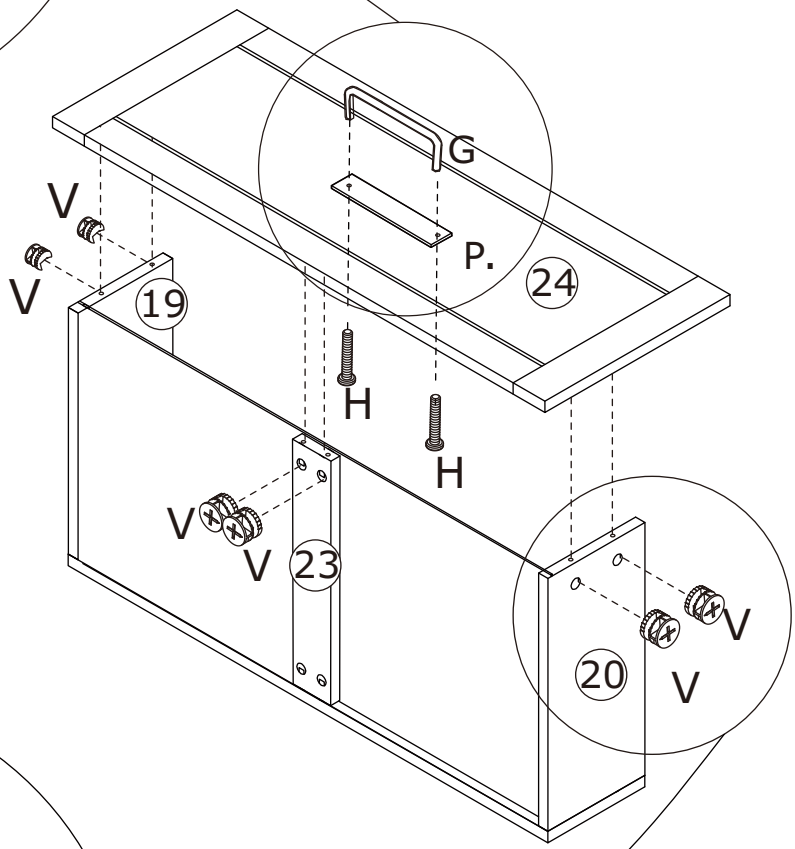


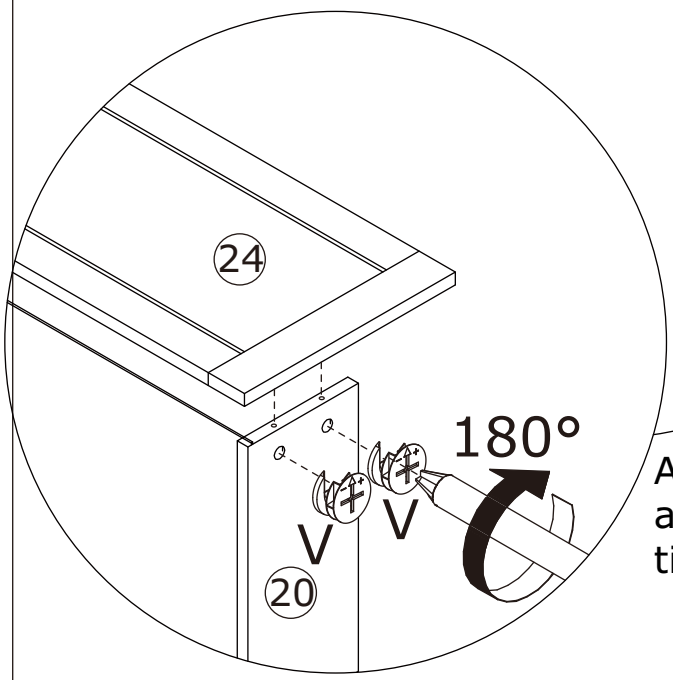


Attach panel 19, 23, 20 to panel 24 and add the eccentric wheel (V) to tighten in clockwise rotation.

# 34

| D x 2 | E x 8 | |
|---|---|---|
| 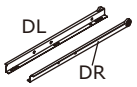  L =350 mm |  ∅3 x 12 mm | 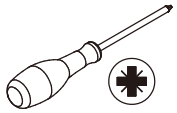 |




Secure the rails (D-DL) and (D-DR) to panels 19 and 20, respectively, with screws (E) as shown in the figure

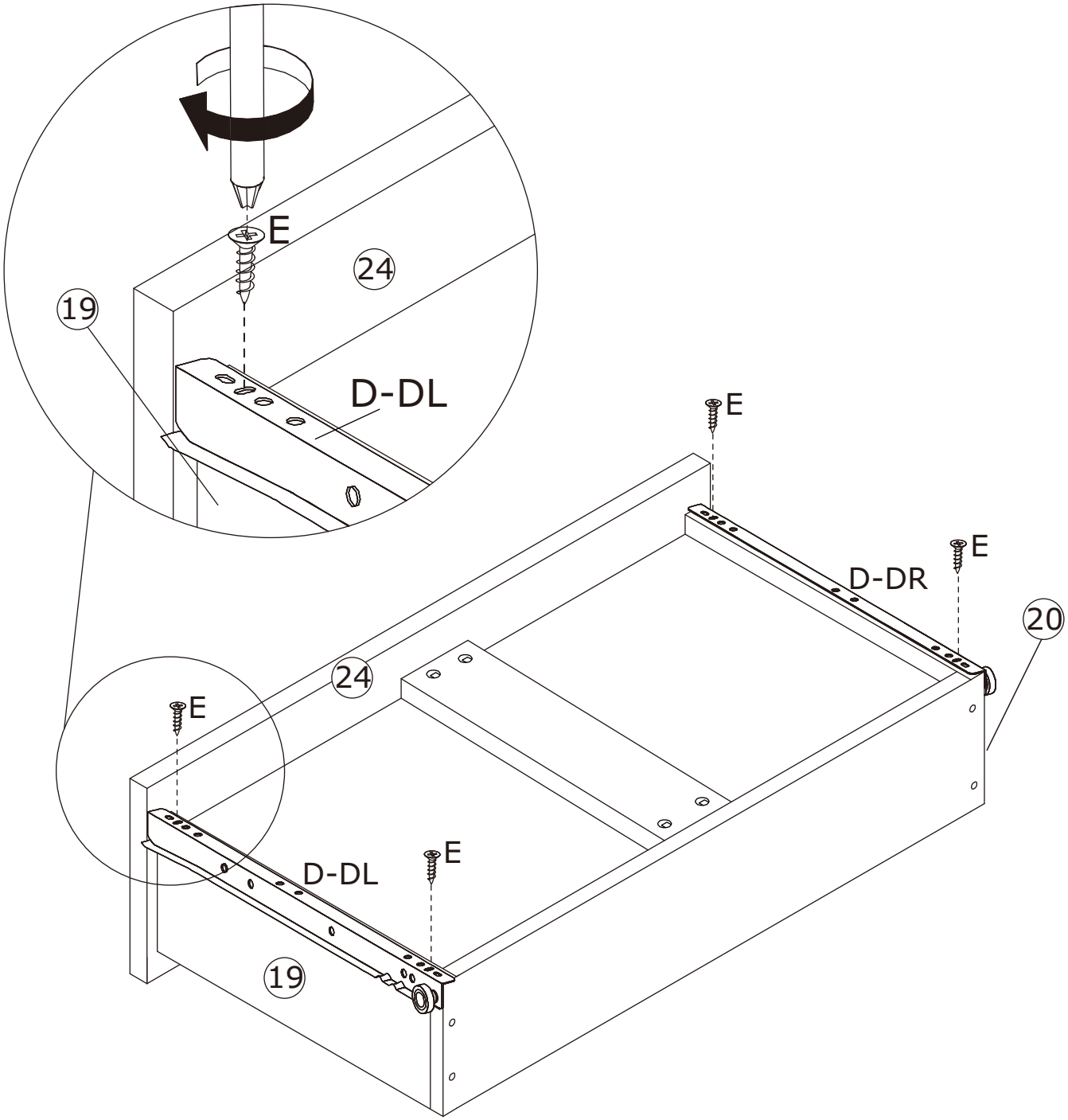

35

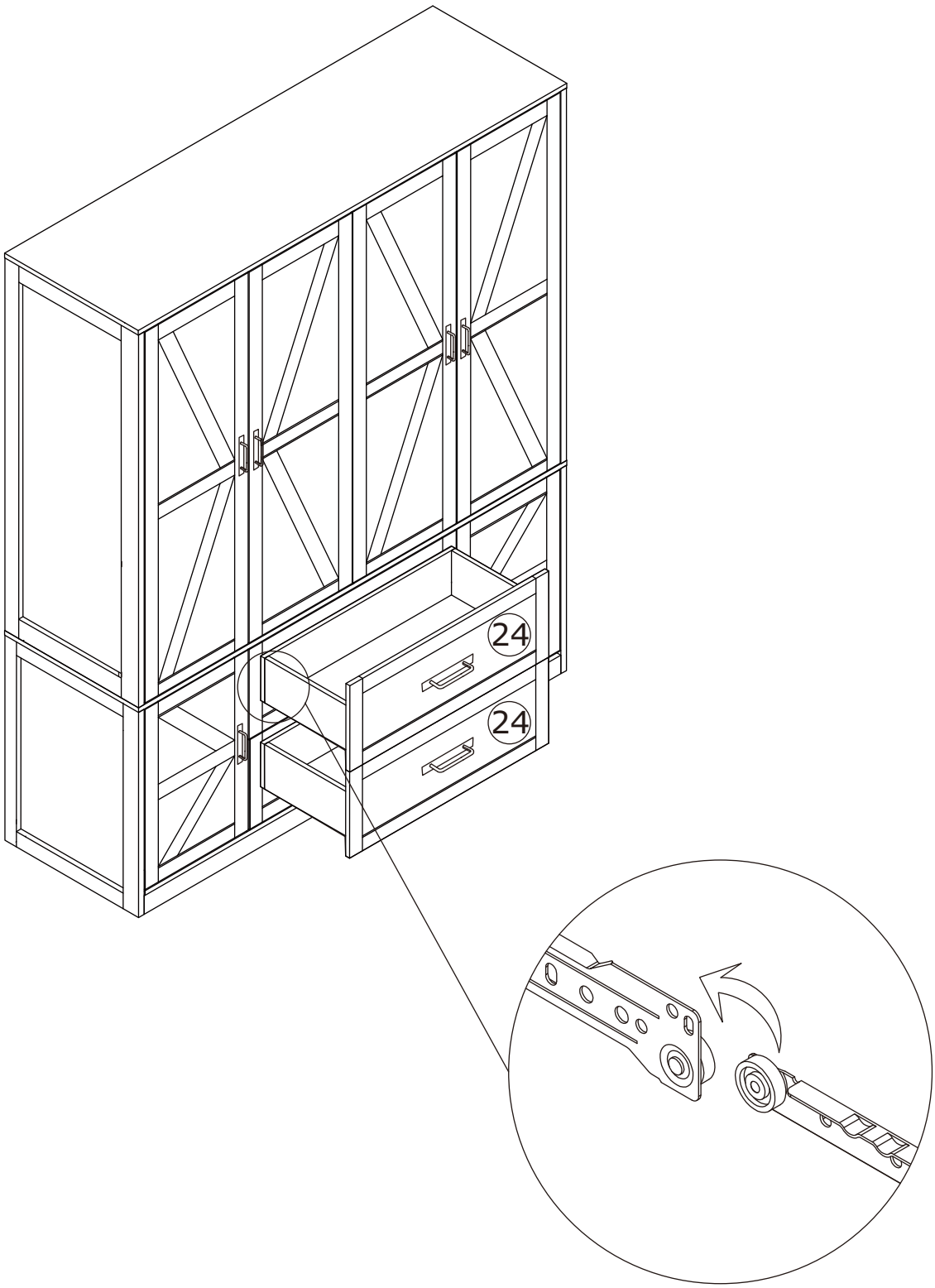


Align the rails as shown and insert the drawers.

# 36

| E x 34 | M x 34 | |
|---|---|---|
|  ∅3 x 12 mm |  | 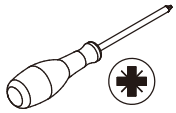 |

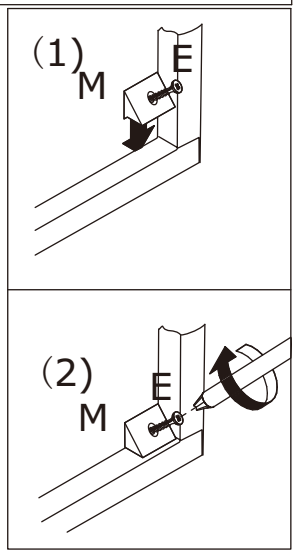


Insert the grommet (H) into the rear groove and secure with the screw (E) as shown.

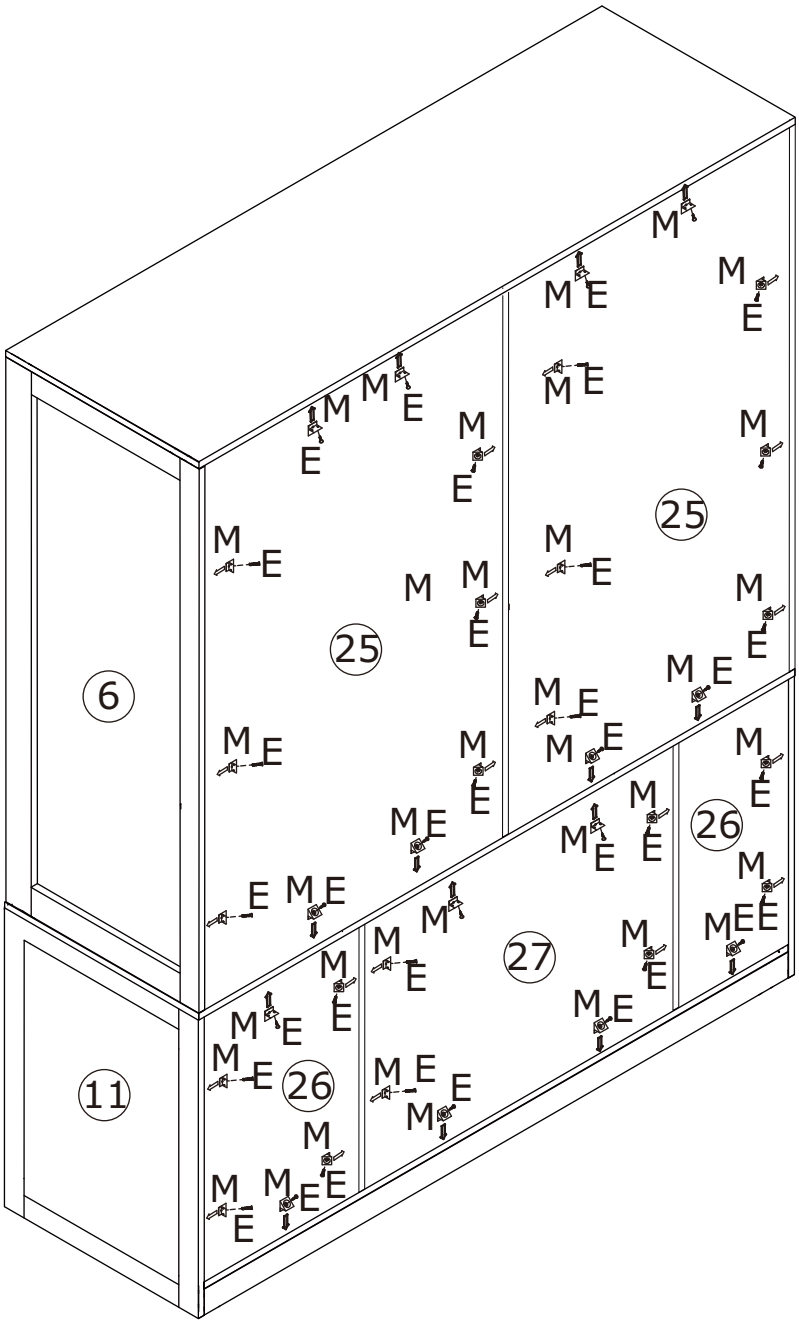

37

| X x 2 | Y x 8 | |
|---|---|---|
|  |  ∅4 x 12 mm | 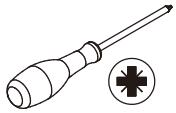 |

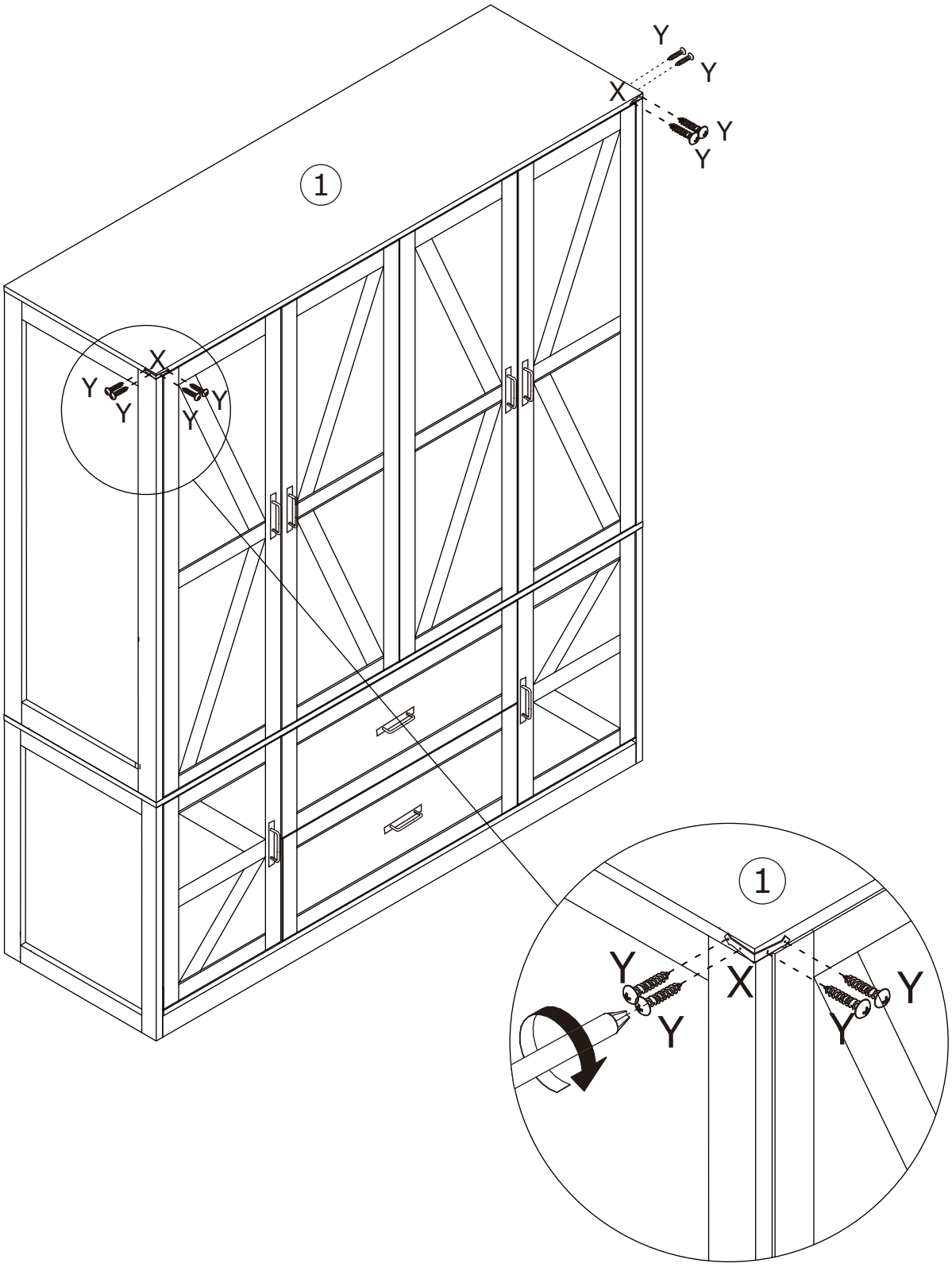


Secure the fittings (X) to panel 1 with screws (Y) as shown.

38

R x 1



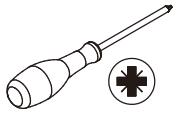

# WALL

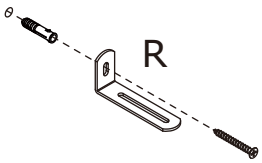




1.

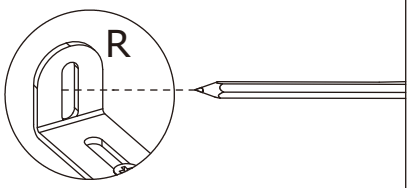


2.

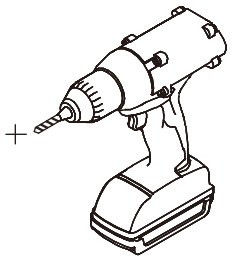

3.

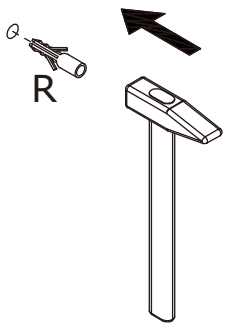


4.

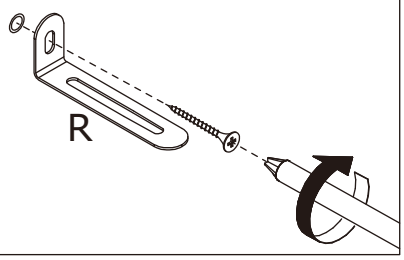


Drill holes in the wall as shown, tap in the plastic parts (R), and fasten the iron parts (R) to the plastic parts with screws (R).

39

Push the cabinet onto the iron member (R) as shown in the figure

WALL

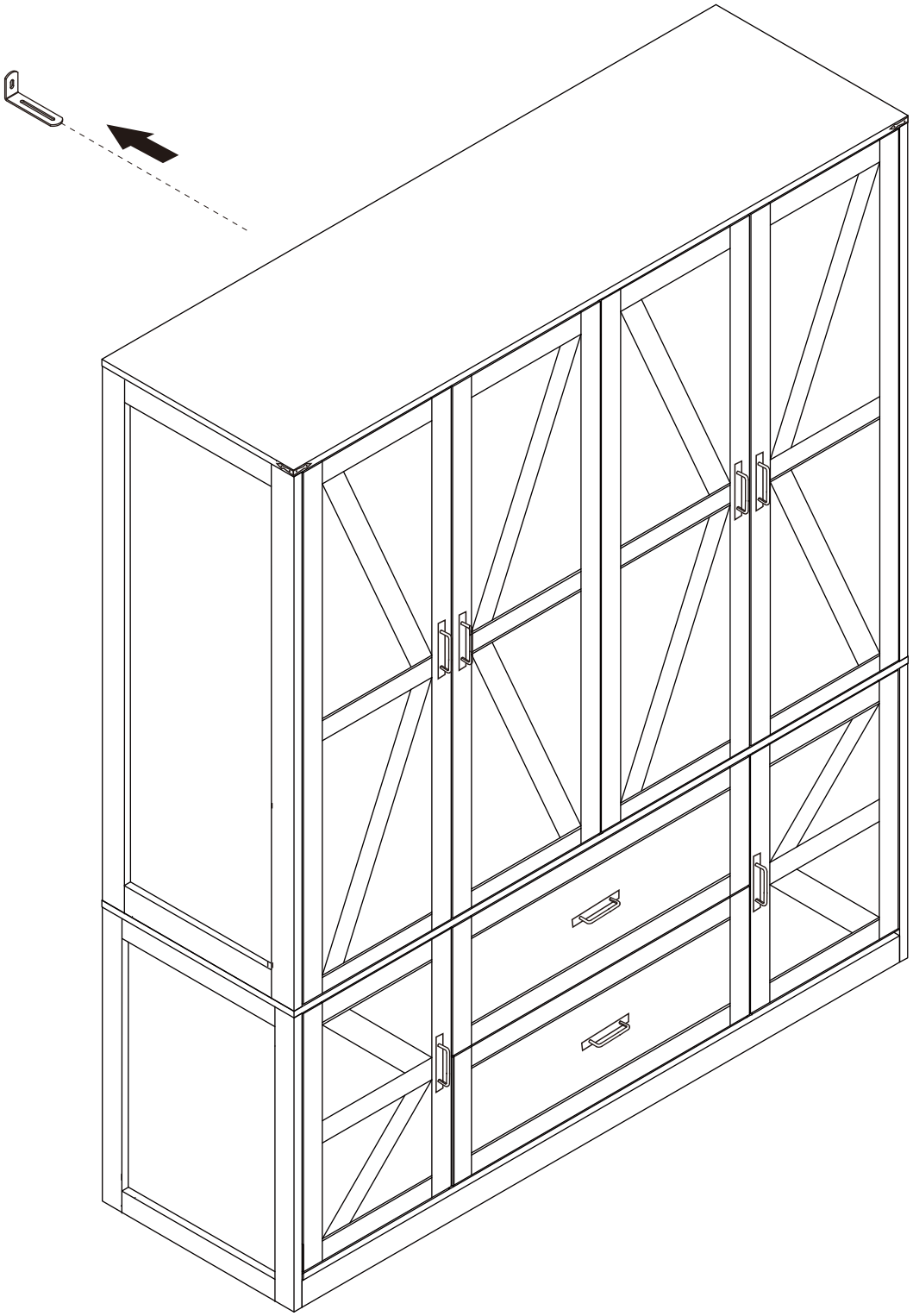

40

R x 1



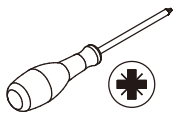

The cabinet will be secured with screws (R) as shown.

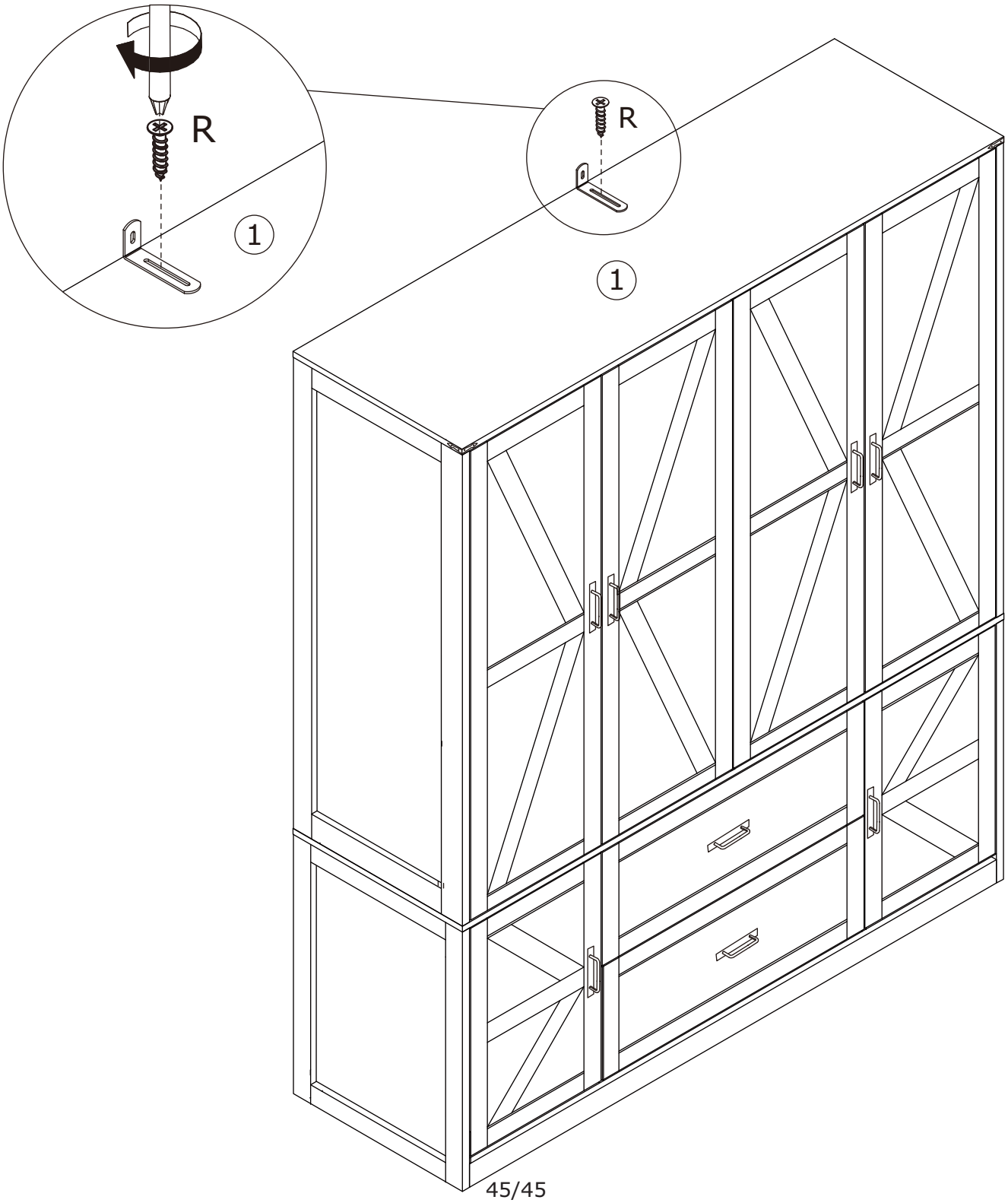

# WARRANTY

## WARRANTY CLAIMS

- There is a 30-day warranty for broken furniture or any other problems that do not work properly. The warranty will start from the date of purchase which must be verified by proof of purchase.

- Before making a claim, we may be able to answer your query, simply call us. Please leave your purchase order number, along with some details of the problem, if you want a replacement part. We will arrange within 48 hours. If there is out of stock, we will reply with a shipping date.

- The product must be used in accordance with the instructions provided. For health reasons.

- For other reasons, if the furniture needs to be returned, it must be cleaned and dried and operated within 30 days of receipt.

## Type of Warranty Claim

- Failure to follow the furniture instructions will invalidate the warranty. Attention please.

- Does not include damage during installation, but includes damage during transportation.

## Scope of responsibility

- Shall not bear any responsibility for misuse or user damage and / or loss of parts during the installation of furniture.

- After using, the damage and scratches of the furniture are not covered by the warranty.

## The Warranty Relates to All Bought in The Us and Covers The Following Areas

- Sheet parts: 1 month from the date of purchase.

- Electrical parts: 1 month from the date of purchase.

# RETURNS

## CHANGED YOUR MIND AND NEED TO RETURN YOU ITEM?

## PLEASE FOLLOW THE BELOW INSTRUCTIONS:

- If you have purchased and have simply changed your mind, follow the retailer's instructions for returns.

## DEFECTIVE ITEMS

- If your item is defective in any way, i.e. it doesn't work but you can't identify why, in the first instance, please call us.

## DAMAGED ITEMS

- If you receive an order with obvious shipping damage from the retailer, then we suggest the delivery is refused. If the delivery has been accepted and then shipping damage is found, please follow the specific instructions advised by the retailer.
  In all circumstances please save all packaging material and paperwork for the order. Please be aware that if you dispose of packaging material or attempt to return the merchandise without contacting the fulfiller, you jeopardise your chances of making a claim, and you may not receive a credit for the return.

## AFTER-SALES CONTACT



adelahu@fufugaga.com


208-820-0068