VENTISOL®

7500W GARAGE HEATER

INSTRUCTION MANUAL

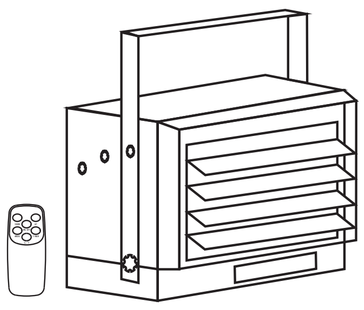

PLEASE READ AND SAVE THESE IMPORTANT SAFETY INSTRUCTIONS

PET OWNERS WARNING: Health warning for some small pets, including birds, as they are extremely sensitive to the fumes produced during the first-time use of many appliances. These fumes are not harmful to humans but we recommend that you do not use your heater around birds and small pets during its initial use until the manufacturing corrosion (anti-corrosion) coatings burn off.

IMPORTANT INSTRUCTIONS

When using electrical appliances, basic precautions should always be followed to reduce the risk of fire, electric shock, and injury to persons, including the following:

1. Read all instructions before installing or using this heater.

2. This heater is hot when in use. To avoid burns, do not let bare skin touch hot surfaces.

Keep combustible materials, such as furniture, pillows, bedding, papers, clothes, etc. and curtains at least 3 feet (0.9 m) from the front of the heater and keep them away from the sides and rear.

3. Extreme caution is necessary when any heater is used by or near children or invalids and whenever the heater is left operating and unattended.

4. Always turn off the power of heater when not in use.

5. Do not operate any heater after it malfunctions. Disconnect power at service panel and have heater inspected by a reputable electrician before reusing.

6. Do not use outdoors.

7. This heater is not intended for use in bathrooms, laundry areas and similar indoor locations. Never locate heater where it may fall into a bathtub or other water container.

8. To disconnect heater, turn controls to off. and turn off power to heater circuit at main disconnect panel.

9. Do not insert or allow foreign objects to enter any ventilation or exhaust opening as this may cause an electric shock or fire, or damage the heater.

10.Connect to properly grounded outlets only.

11. To prevent a possible fire, do not block air intakes or exhaust in any manner. Do not use on soft surfaces, like a bed, where openings may become blocked.

12. A heater has hot and arcing or sparking parts inside. Do not use it in areas where gasoline, paint, or flammable liquids are used or stored.

13. Use this heater only as described in this manual. Any other use not recommended by the manufacturer may cause fire, electric shock, or injury to persons.

14. This heater may display "ER" on screen that parts of the heater are getting excessively hot. Please immediately turn the heater off and inspect for any objects on or adjacent to the heater that may have blocked the airflow or otherwise cause high temperatures. **DO NOT OPERATE THE HEATER WHEN DISPLAY "ER" ON SCREEN.**

SAVE THESE INSTRUCTIONS

DESCRIPTION

Electric utility heaters are designed to meet a variety of heating requirements by switching a few wires located in the base of the unit. Heat output is 25 589 BTU per hour. Features horizontal and vertical flow horizontal air flow. Built-in thermostat with overheating safety thermal cutout.

SPECIFICATIONS

Rating	AMPS	BTU/hour
7500W II 240V	30	25589
5000W I 240V	20.9	17065

GENERAL SAFETY INFORMATION

⚠WARNING: This heater requires hardwire installation (no plug). The installation of this product must be carried out by a Certified Electrician and in accordance with all local and national electrical codes.

⚠WARNING Read and understand all installation and operation instructions and observe all safety instructions.

1. Use only copper wires rated for at least 75ºC.
2. Heater air flow must be directed parallel to or away from adjacent wall.
3. Observe wall, floor and ceiling clearance requirements.
4. All wiring must be done according to national and local electrical codes in the united states and the heater must be grounded as a precaution against possible electrical shock. Heater circuit must be protected with proper fuses.
5. The mounting structure and the anchoring hardware must be capable of reliably supporting the weight of the heater and if used the mounting bracket.
6. All electrical power must be disconnected and the main service box must be locked before inspecting cleaning or servicing the hater. This is a precaution to prevent

serious electric shock.

7. This heater is not suitable for use in hazardous locations as defined by the national fire protection association (NFPA) in the united states. This heater has hot and arcing sparking parts inside. Do not use it in areas where gasoline paint or flammable liquids are used or stored.
8. This heater is not suitable for use in corrosive atmospheres such as marine greenhouses or chemical storage areas.
9. This heater must be mounted at least 8 feet off the floor.

⚠WARNING Improper installation or failure to follow the procedures outlined in this instruction manual can result in serious electrical shock.

LOCATING HEATER

Install heater out of traffic areas maintaining clearances stated in figure 2. The direction of air flow should not be restricted is by columns or machinery and the air flow should wipe exposed walls rather than blowing directly on them. When more than one heater is used in an area the heaters should be arranged so that the air discharge of each heater supports the air flow of the others to provide best circulation of warm air as indicated in figure 3.

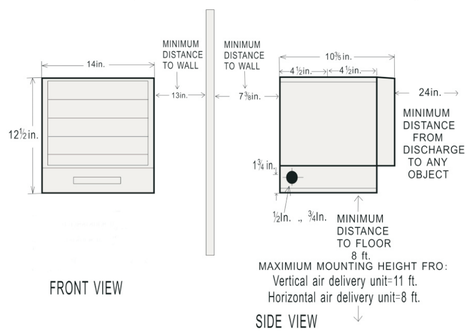

Figure 2

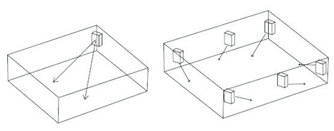

Figure 3

INSTALLATION

MOUNTING THE BRACKET

Refer to Figures 4a and 4b.

1. Locate a wood stud in the wood ceiling joist. If you cannot locate a wood stud, you have to install a wood piece on the ceiling as this heater must be securely fastened.

2. Remove the mounting bracket from the heating unit by loosening bracket screws with a wrench and slipping the handle off over the screw heads.

3. Place a washer on screws before inserting through the holes in the mounting bracket and screw them securely into a ceiling joist.

NOTE: If you want to swivel the heater either to the right or left adding a washer to both sides of the bracket is recommended. A longer lag bolt may be required to properly secure the unit. See Figure 4a.

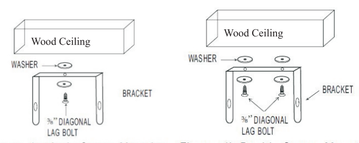

Figure 4a-single-Screw Mounting Figure 4b-Double-Screw Mounting

HANGING THE HEATER

1) Attach the heating unit to the mounting bracket.
2) Lift the heater up and into the mounting bracket.
3) Align the bracket screws with the keyhole slots in the mounting bracket.

4) If the heater is to be tilted it must be positioned in the keyhole slots - see **figure 5.**
5) Tighten the bracket screws with a wrench so the unit is securely suspended at horizontal or vertical level.

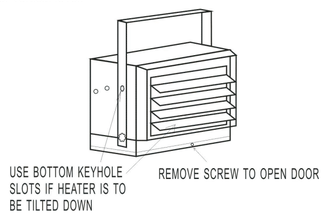

Figure 5

ADJUSTING AIR FLOW DIRECTION

1. To turn the unit when it has been installed with a single lag bolt (as shown in figure 4a), simply turn the entire heater as needed. The unit cannot be turned horizontally if it has been installed with 2 lag bolts.

2. To tilt the unit vertically, loosen the bracket screws (see figure 5).

NOTE: For the heater to be tilted vertically, it must be mounted in bottom keyhole slots of mounting brackets to maintain adequate clearance and prevent possible overheating.

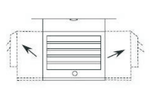

Rotate

1. Adjust louvers to the desired position.

NOTE: The louvers are designed so they cannot be completely closed. Do not attempt to defeat this feature; damage to the unit can result.

⚠WARNING To prevent possible electric shock, disconnect power to the heater at the main service box before attempting to adjust the heat output of this unit.

MULTIPLE VERTICAL ANGLES

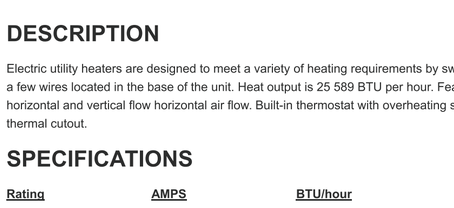

CONNECTING THE POWER

HEATER RATING&VOLTAGE	HEATER AMPS	MAX. FUSE SIZE	MIN. WIRE SIZE 75℃ COPPER
7500W/240V	30	45	#8

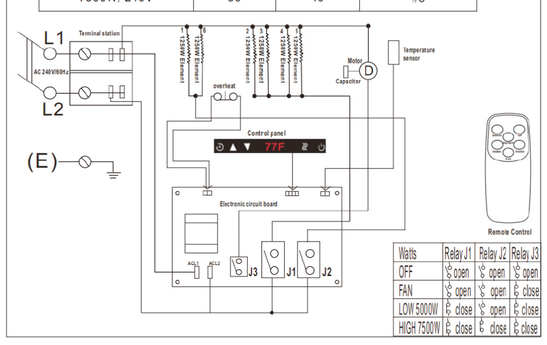

Watts	Relay J1	Relay J2	Relay J3
OFF	open	open	open
FAN	open	open	close
LOW 5000W	close	open	close
HIGH 7500W	close	close	close

Warning: This appliance must be grounded!

Warning: The appliance must connect to a current protection circuit or device at 50Amp or less before being connected to power supply!

1. Remove the screw from the front of the unit to connect the power to the heater.
2. Attach the cable connectors to the unit (See **Figure 6**) and slide the 10-gauge wire through the cable connector.

NOTE: All wiring must be carried out by a Certified Electrician and must be in accordance to national and local electrical codes in the United States. For certain applications, conduit may be required, See Figure 6. Check local electrical codes. If you run the wiring in conduit and wish to be able to turn the heater be sure to purchase enough flexible conduit to allow the heater to be turned.

3. Connect the wire to the power block located in the base of the heater - See **Figure 7.**
4. Turn on the power at the main service.

CAUTION:

High temperatures – risk of fire. Keep flammable materials, such as furniture, pillows, bedding, papers, clothes and curtains at least 3 ft. (0.9 m) from the front and top of the heater and keep them away from the sides and rear.

To reduce the risk of fire, do not use it in areas where gasoline, paint or flammable liquids are used or stored.

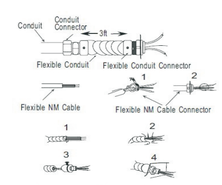

Figure 6-Connectors, cable, and hardware used to wire the heater

Figure 6

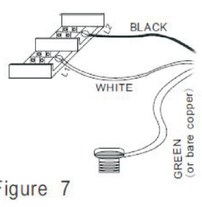

Figure 7

OPERATING INSTRUCTIONS

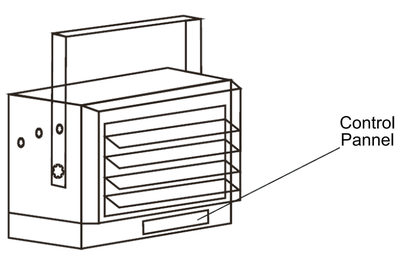

WARNING: the heater must be properly installed before it is used.

SETTING THE THERMOSTAT

1) When the heater is powered on, the power indicator light on control panel will be on.

2) When the room reaches desired comfort level, the heater will automatically stop heating.

NOTE: Heater will cycle on and off to maintain room temperature.

THERMAL CUT-OUT

The heater will automatically shut off when parts of it overheat. The heater will turn ON again when the abnormal temperature returns to normal levels. Should the unit overheat and cause the thermal cut-out to cycle, the cause of the overheating should be determined and corrective action taken before further operation.

NOTE: When the thermal cut-out is activated, control panel will show "ER". In this case, immediately turn the heater OFF and inspect for any objects on or adjacent to the heater that may cause high temperatures. **DO NOT OPERATE THE HEATER WHEN SHOW "ER".**

MAINTENANCE INSTRUCTIONS

1. Before cleaning, make sure the power has been turned off at the circuit breaker panel and that the heating element of the heater is cool.
2. To maintain the external appearance of the radiator, it need only be wiped over occasionally with a dry duster. During the summer months, or at other times when the appliance is not in use and is completely cold, It should be the best opportunity to wipe over with a damp cloth.
3. Do not use abrasive clearing powders or furniture polish. Do not use chemical or abrasive products, metallic scourers and so on, which may deteriorate the surface, to clean the appliance.
4. Clean the appliance with a dry and sooth cloth when it is not in use, and make sure the power has been turned off at the circuit breaker panel and that the heating element of the heater is cool.
5. During the summer months, or at other times when the appliance is not in use, disconnect the power supply, and cover the whole appliance with a dustcloth. Moreover, keep the appliance in a dry and cool place.
6. All other servicing should be performed by qualified service personnel. Do not try to repair the heater yourself.

Keep this instruction

Garage Heater Electronic Control Function Specification

一：Control Panel

The control panel has total five buttons: ON/OFF " ⏻ ",

MODE(OFF FA LOW HIGH) " ",DOWN " ",UP" ",TIMER" ",

1:" ⏻ "ON/OFF Button (shows green icon)

When it's connected to power supply, will hear "Beep" sound, screen displays all icons in 1 second. And ON/OFF button always shows in green, working environment temperature and OFF alternately display on the screen each 15 seconds. When it's on OFF conditions, other buttons could not be operated, the default temperature is 77℉,the defaulted heating status is OFF.

Pressing ON/OFF button, all icons will display on the screen, then press" " to start various function (3 seconds delay). If the heater is turned off, the motor will be delayed to turn off for 30 seconds, and the heat will be blown out.

When you finish adjusting Heating and Temperature, it has memory function when switch it in the next circulation.

Pressing ON/OFF button for 10seconds, the heating function is locked. At this time, the heating button has no function when press it. Then pressing ON/OFF button for 10 seconds again, the heating function is unlocked. the heating button has function when press it. (lock&unlock, the digital screen will lighting for 6 times).

2:" "MODE(OFF LOW HIGH) Button (Shows blue icon)

<<1 is the manual operated heating control button, adjusting heating stages: OFF, FA,LOW (5000W shows L), HIGH (7500W shows H).

Pressing" "button for 5 seconds, switch ℉ temperature and ºC temperature freely.

3:DOWN" " UP" " (shows blue icon)

It is the manual operated temperature control button, adjusting temperature range 10ºC --35ºC(50℉--95℉),that is each stage is increasing 2℉(/1ºC)." " this button is decrease temperature or time;" " this button is increasing temperature or time.

4: When the screen displays over 95℉ (35℃) of working environment temperature, the temperature reading flashes continuously, motor is still working, but no heating function. When the temperature below 95℉ (35℃), restore to the status of your settings.

5: When the internal temperature of the heater is over 65℃, screen displays "ER" and flashes continuously, heater not work.When the temperature is below 65℃, it will restore to the status of your settings.

6: Manual operated Timer setting button: time setting stages: OH-1H-2H -3H------8H.After finish adjusting timer and turn off the whole garage heater, when turn on the heater again, the default status is OFF, no memory function.

7: After adjusting MODE and TIMER button, working environment temperature, heating stages and timer setting alternately display on the screen each 15 seconds.

BUTTON distributed as below

二：Remote Control(NO LONG PRESSFUCTION)

The remote control has total 6 buttons: ON/OFF, MODE(OFF FA LOW HIGH), DOWN, UP, ºC/℉, TIMER.

1:ON/OFF button: the function is the same as the manual operated function.

2:MODE(OFF LOW HIGH) :the function is the same as the manual operated function.

3:DOWN： the function is the same as the manual operated function.

4:UP: the function is the same as the manual operated function.

5:℃/℉: the function is the same as the manual operated function.

6:TIMER:the function is the same as the manual operated function.

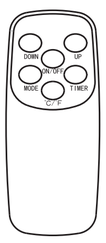

Error Code Troubleshooting Guide

Error Code	Possible Cause	Recommended Solution
ER	1.Overheat safety cut-off. 2. Temperature sensor is loosened or damaged.	DISCONNECT POWER! 1. Check if the heater has any objects to be covered, and if the motor working. Normally, when the temperature is below 65℃, it will restore to the status of your settings. 2. Check the temperature sensor, re-tighten it. If still not work, change a new temperature sensor to try it.
E1	1. Temperature sensor is loosened. 2. Temperature sensor is damaged.	DISCONNECT POWER! 1.Check the temperature sensor, re-tighten it. 2. Change a new temperature sensor to try it.
E2	No buttons work over 20 seconds.	DISCONNECT POWER! Re-start unit.
Temperature reading flashes continuously	Temperature over 65℃.	When the temperature is below 65℃, it will restore to the status of your settings.

210*143mm