The Package Contains

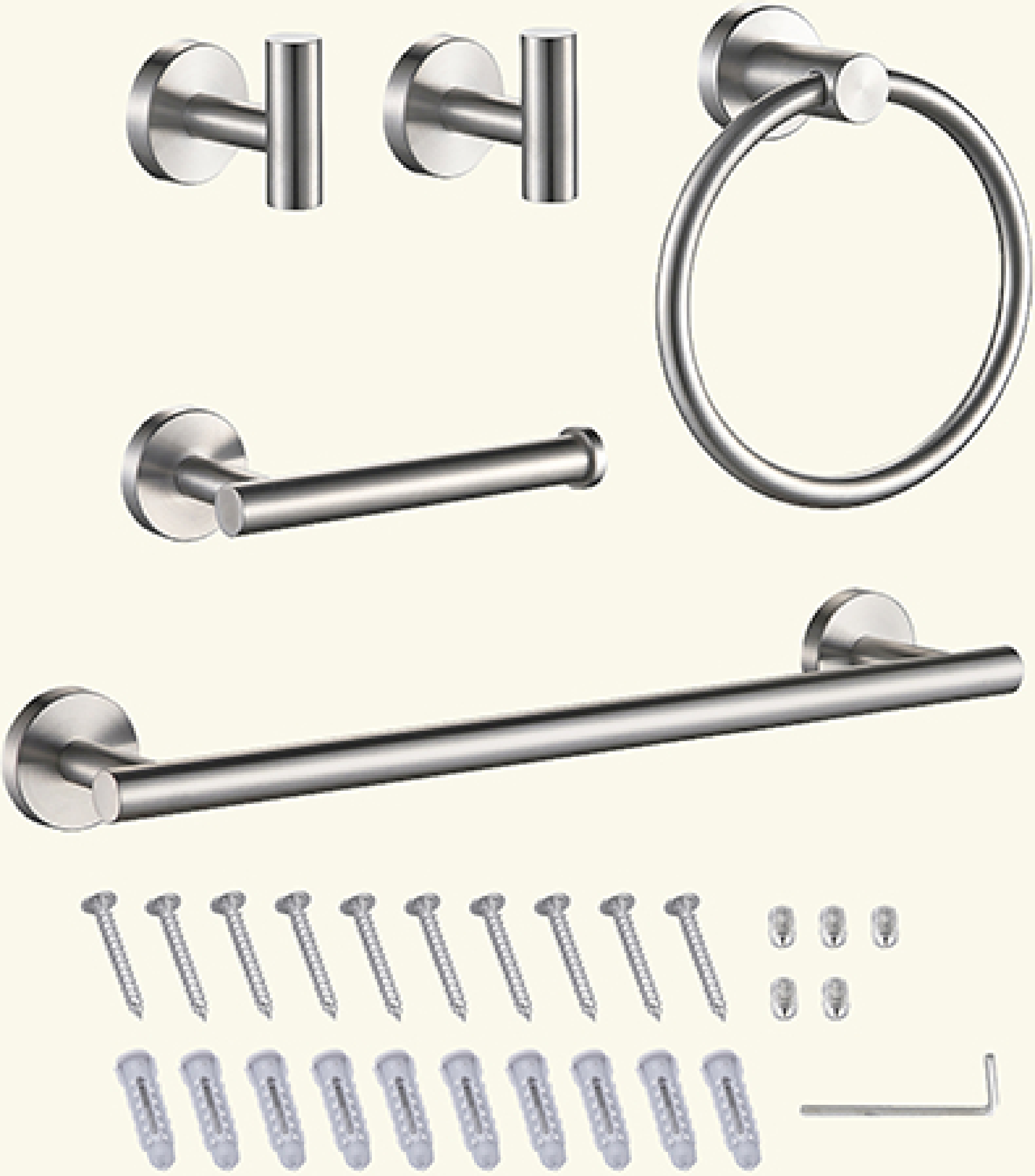

Installation Steps

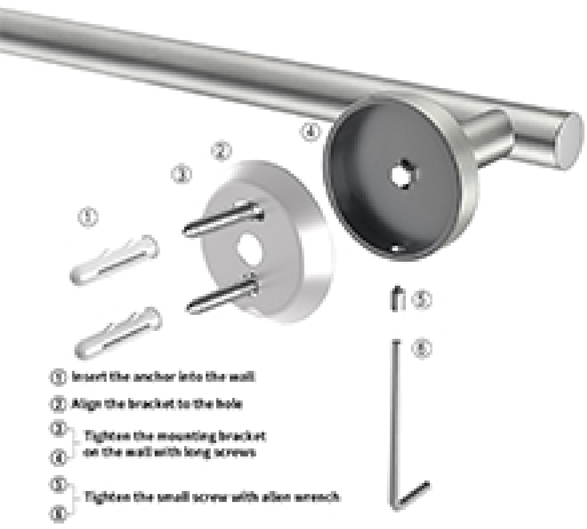

① Insert the anchor into the wall
② Align the bracket to the hole
③ ④ Tighten the mounting bracket on the wall with long screws
⑤ ⑥ Tighten the small screw with allen wrench

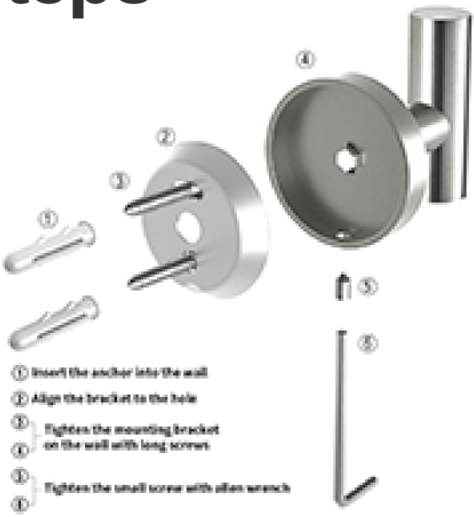

① Insert the anchor into the wall
② Align the bracket to the hole
③ ④ Tighten the mounting bracket on the wall with long screws
⑤ ⑥ Tighten the small screw with allen wrench

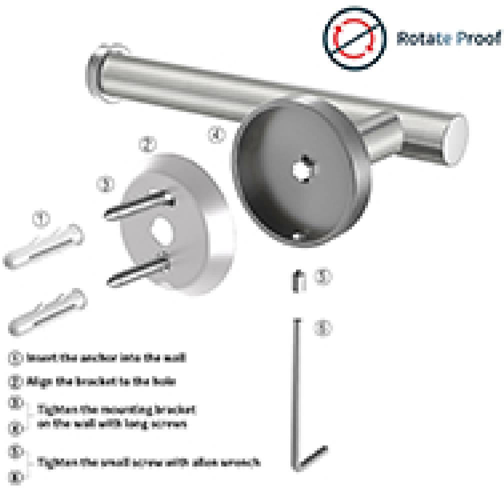

① Insert the anchor into the wall
② Align the bracket to the hole
③ ④ Tighten the mounting bracket on the wall with long screws
⑤ ⑥ Tighten the small screw with allen wrench

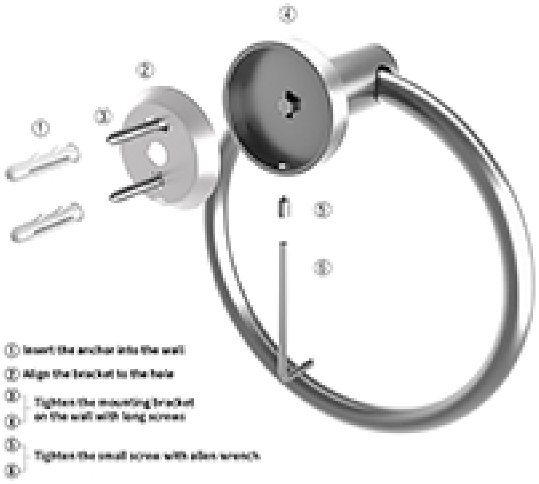

① Insert the anchor into the wall
② Align the bracket to the hole
③ ④ Tighten the mounting bracket on the wall with long screws
⑤ ⑥ Tighten the small screw with allen wrench