UNIDOOR PLUS (STYLE G)

SHOWER DOOR & GLASS PANEL INSTALLATION INSTRUCTIONS

IMPORTANT

DreamLine® reserves the right to alter, modify or redesign products at any time without prior notice. For the latest up-to-date technical drawings, manuals, warranty information or additional details please refer to your model's web page on **DreamLine.com**

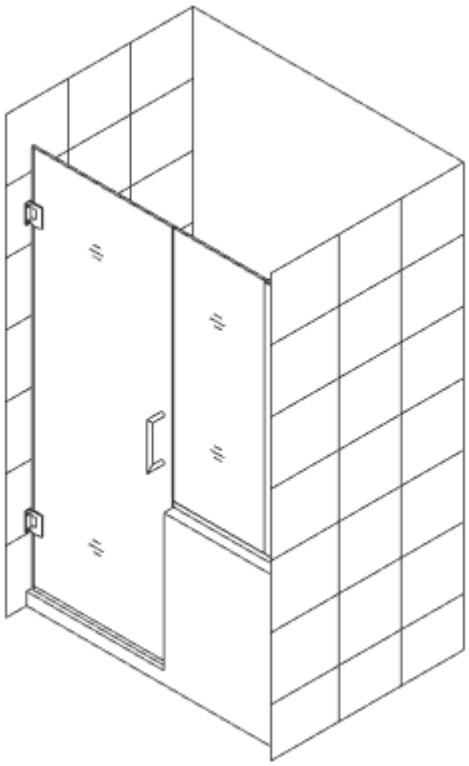

STYLE G

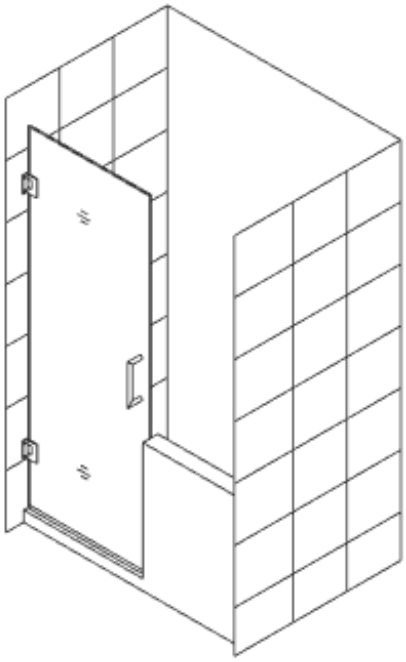

STEP 1: Install Shower Door

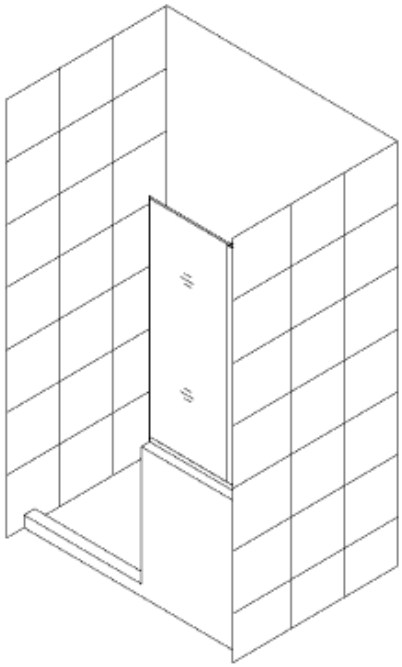

STEP 2: Install Panel

Questions?

Please Call **DreamLine** Customer Support: **1-855-831-2126**

Hours of Operation M-F 8AM - 7PM EST and Saturday 9AM - 5PM EST

Support@DreamLine.com

For more information about DreamLine Shower Doors, Tub Doors and Enclosures, please visit DreamLine.com

©2017 DreamLine. All Rights Reserved

UNIDOOR

see pages 5-6 for related model styles

Shower Door Installation Instructions (for Single Door)

PLEASE REVIEW THIS ENTIRE MANUAL PRIOR TO INSTALLATION

Model #s:
SHDR-20237210F-##
SHDR-20247210F-##
SHDR-20257210F-##
SHDR-20267210F-##
SHDR-20277210F-##
SHDR-20287210F-##
SHDR-20297210F-##
SHDR-20307210F-##

= Finish:
01 = Chrome
04 = Brushed Nickel
06 = Oil Rubbed Bronze
09 = Satin Black

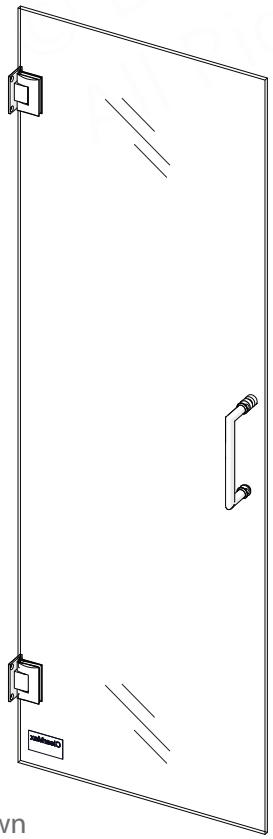

left-swing installation shown

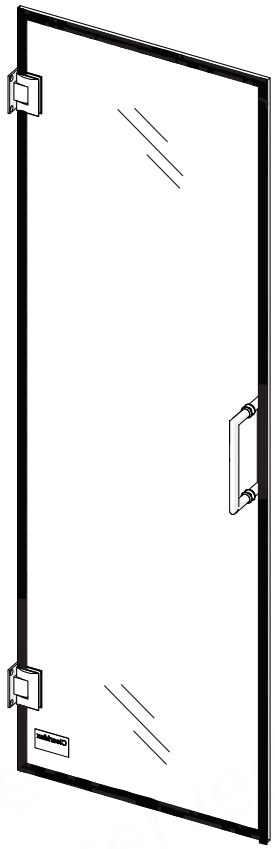

Model #:
SHDR-202472E-09
UNIDOOR EDGE

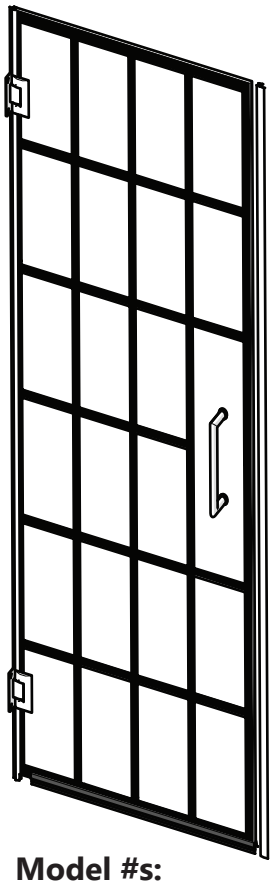

Model #s:
SHDR-2428720-89
SHDR-2430720-89
SHDR-2424720-89
UNIDOOR TOULON

© DreamLine® All Rights Reserved

IMPORTANT!
DreamLine® reserves the right to alter, modify or redesign products at any time without prior notice for the purpose of product improvement and customer experience. Please refer to the model's web page on **DreamLine.com** for the latest technical drawings, installation manuals, warranty information or additional product details.

Do Not Return Product to the Store. Contact DreamLine® with any questions

Questions?
Please contact DreamLine Customer Support
*See **DreamLine.com** for hours of operation*

Support@DreamLine.com
1-866-731-2244

©2026 DreamLine® All Rights Reserved

DREAMLINE®
dream in style

©2026 DreamLine® All Rights Reserved

Do not remove ClearMax stickers until glass is installed.

CLEARMAX®

This model is treated with DreamLine's exclusive ClearMax™ Glass technology. This is a specially formulated coating that prevents the build up of soap and water spots.

Install the surface with the ClearMax™ label towards the inside of the shower. Please note that depending on the model, the glass may be coated on either one or both surfaces.

For best results, squeegee the glass after each use and dry with a soft cloth.

Record the following purchase information for your records or in the event you need to contact DreamLine®:

Purchase Order Number _____

Installation Date _____

Installed By: _____

Store/Vendor Purchased From _____

OD Number* (optional) _____
*located on the shipping box or label if available

SKU Number _____

Table of Contents

Section Title	Page #
ClearMax® Coating Information	—
Warnings and General Preparation	2
Required Reinforcement Information	3
Unidoor Glass-to-Wall Hinge & Handle Location	4
Unidoor Styles	5-6
Model Specific Preparation	7
Tools	8
Detailed Diagram of Shower Door Components	9
Parts List	10
Specifications	11
Installation Steps	12-22
PVC Hinge Spacer Information (if necessary)	13
Handle Assembly Installation	17
Sweep Vinyl Seal Installation	18
Hinge Side Vinyl Seal Installation	19-20
Hinge Assembly Adjustment Procedure	21
L-Strike Vinyl Seal Installation {for single shower door installation only}	22
Product Maintenance	24
Troubleshooting	25
Factory Parts Information (UNIDOOR/-LS/ PLUS/ -X)	26
Factory Parts Information (UNIDOOR EDGE)	27
Factory Parts Information (UNIDOOR TOULON)	28

Symbol Legend

TIP **TIP** - for ease of installation.

CORRECT - recommended.

NOTE **NOTE** - take note of special feature; additional information.

INCORRECT - not recommended.

REQUIRED - requires special attention; signifies a warning.

Average Installation Time

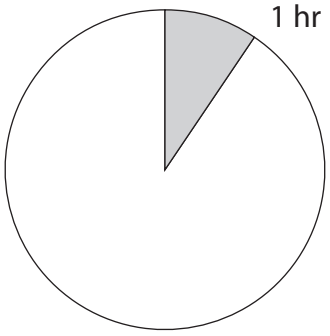

©2026 DreamLine® All Rights Reserved

©2026 DreamLine® All Rights Reserved

IMPORTANT

- DreamLine® reserves the right to alter, modify or redesign products any time without prior notice for product improvement and customer experience. Please refer to the model's web page on **DreamLine.com** for the latest technical drawings, installation manuals, warranty information or additional product details.
- This product should be installed by someone familiar with the construction requirements for this type of project and the care necessary for the safe installation and operation of the product.
- The safety of any installation is the responsibility of the installer.
- Professional installation recommended. *(All Models)*
- Professional installation required. *(Enigma Series)*
- To prevent damage or serious injury, Do Not lean against the installed panel/door/glass.
- To prevent damage or serious injury: Do Not attempt to lift or move a heavy lite of glass alone. Use an assistant and/or a professional grade glass suction cup.
- The installation of some models may require drilling down into the threshold. Contact the manufacturer of the base, tub, or threshold material with any questions regarding the drilling of holes into their product.
- All drawings in this installation manual are for illustrative purposes only and are not drawn to scale.

TEMPERED GLASS WARNING

- Your Shower Door Glass Could Shatter Without Warning if Improperly Installed or Mishandled
- Do Not install or operate a shower door if the glass has chipped corners, slivered edges or is otherwise damaged and/or has been dropped or banged into a hard surface such as tile, marble or glass.
- **The main causes of tempered glass breakage are:**
  - Improper handling, storage or installation
  - Misuse/abuse
  - Lack of maintenance
  - Failure to replace damaged glass
  - **Improper handling during storage, unpacking and installation:**
  - Corners and edges are the most susceptible area to damage on a lite of tempered glass and should be protected and handled with care during storage, unpacking, installation and operation. A concentrated point of pressure or impact with a surface harder than itself may cause the tempered glass to shatter. The tempered glass may release immediately, within several hours or even days later.
  - **Incorrect installation of door hardware, rollers, hinges, channels, stopper or glass:**
  - Improper installation may include: loose hardware and/or lack of proper gaskets between the hardware and glass. Additionally, improper alignment of guide rails, wall profiles or other hardware during installation or operation may place stress on the glass edges and cause it to break.
  - This product must be installed by a professional and experienced installer familiar with the safe handling of tempered glass.
  - **Improper use of this product:**
    - Aggressively opening or closing the door may cause trauma to the glass, which can lead to breakage. This may occur immediately or hours or even days later.
    - **The shower door hardware and glass should be inspected periodically:**
      - Instruct the homeowner how to perform a periodic inspection of the shower hardware and glass - some minor adjustments may be necessary based upon the use (or misuse) of the shower door. Ensure that the hardware remains tight and that the door alignment and operation are correct. Any adjustments should be made upon discovery to prevent damage to the product.
      - Additional considerations should be given to the installation of frameless tempered glass products in households with young children or an elderly person due to an increased chance of improper handling. In such cases, alternatives such as shower curtains or grab bars should be considered.

GENERAL PREPARATION

- After opening all boxes and packages, read this introduction carefully. Check that all the items are included in the package by marking off the components on the **"Detailed Diagram of Product Components"** page. Examine all boxes and packages for shipping damage. If the unit has been damaged, has a finishing defect, or is missing parts; please contact our Customer Support department within 3 business days of the delivery date. **Please note that DreamLine® will not replace any damaged products or missing parts free of charge after 3 business days or if the product has been installed.** Please contact DreamLine® if you have any questions.
- **Please note that you should refer to your local building codes with questions on installation compliance standards. Building and plumbing codes may vary by location, and DreamLine® is not responsible for code compliance standards for your project and will not accept any returns.**
- If this unit is going to be installed in a new construction, install all the required plumbing and drainage before installing the shower. **Use a competent and licensed (if required by local code) plumber for all plumbing installation.**
- Make sure that prior to beginning the installation, the surfaces are leveled and solid and will be able to support the total weight of the unit. Also make sure the walls are at right angles. Irregular installation surface level, radius corners or improper angle of side walls will result in serious problems for your installation. Please note that some adjustments and drilling will be necessary during the installation process.
- Protect all primary surfaces of the product during installation. Never set your glass down directly onto a tile floor. Leave corner protectors in place until it is necessary to remove them. Always use a piece of wood or cardboard to protect the bottom edge and corners of the glass prior to and during installation.
- This unit must be installed upon a finished threshold and against finished walls.
- *DreamLine® shower doors are not designed to be installed into a fiberglass surround due to the radius corners and lack of a solid surface to mount the hardware.*

WARNING: TO AVOID THE RISK OF DAMAGE OR INJURY:

- **Follow all recommendations and requirements as shown in the installation instructions.**
- Perform a thorough inspection of the glass and all parts for any damage prior to installation. Any damage to tempered glass can cause breakage.
  Do Not install damaged glass!
- Do Not install or operate a shower or tub door if the glass has chipped corners, slivered edges or is otherwise damaged. Do Not install or operate a shower or tub door that has been dropped or banged into a hard surface such as tile, marble or glass.
- **CAUTION:** Contact with any hard surface can damage tempered glass and cause it to shatter.
- This product uses tempered glass. Glass cannot be cut after it has been tempered.
  Do Not attempt to cut tempered glass.
- DreamLine® Glass Shower doors, Tub doors, Inline panels, and Return panels can shatter due to improper handling or lack of maintenance. Conduct periodic inspections of glass and all parts for possible damage, missing or loose parts.
- Always wear proper safety equipment such as: safety goggles, work gloves and appropriate footwear during the installation process.
- **WARNING. Risk of leakage and/or damage.** Follow all instructions regarding the application of silicone sealant or caulk. Allow 24 hours for the sealant to cure before the initial use of the shower or tub product. Follow the silicone manufacturer's recommendations regarding the use of their product.

- **Thoroughly read these instructions before installing or using this product.**
- **Leave this manual for the end-user of the product.**



This product should be installed by someone familiar with the construction requirements for this type of project and the care necessary for the safe installation and operation of the product.

Required Reinforcement Information

Install DOUBLE STUDS OR install 2”× 6” WOOD BLOCKING between the studs where the hinge assemblies will attach to the wall.

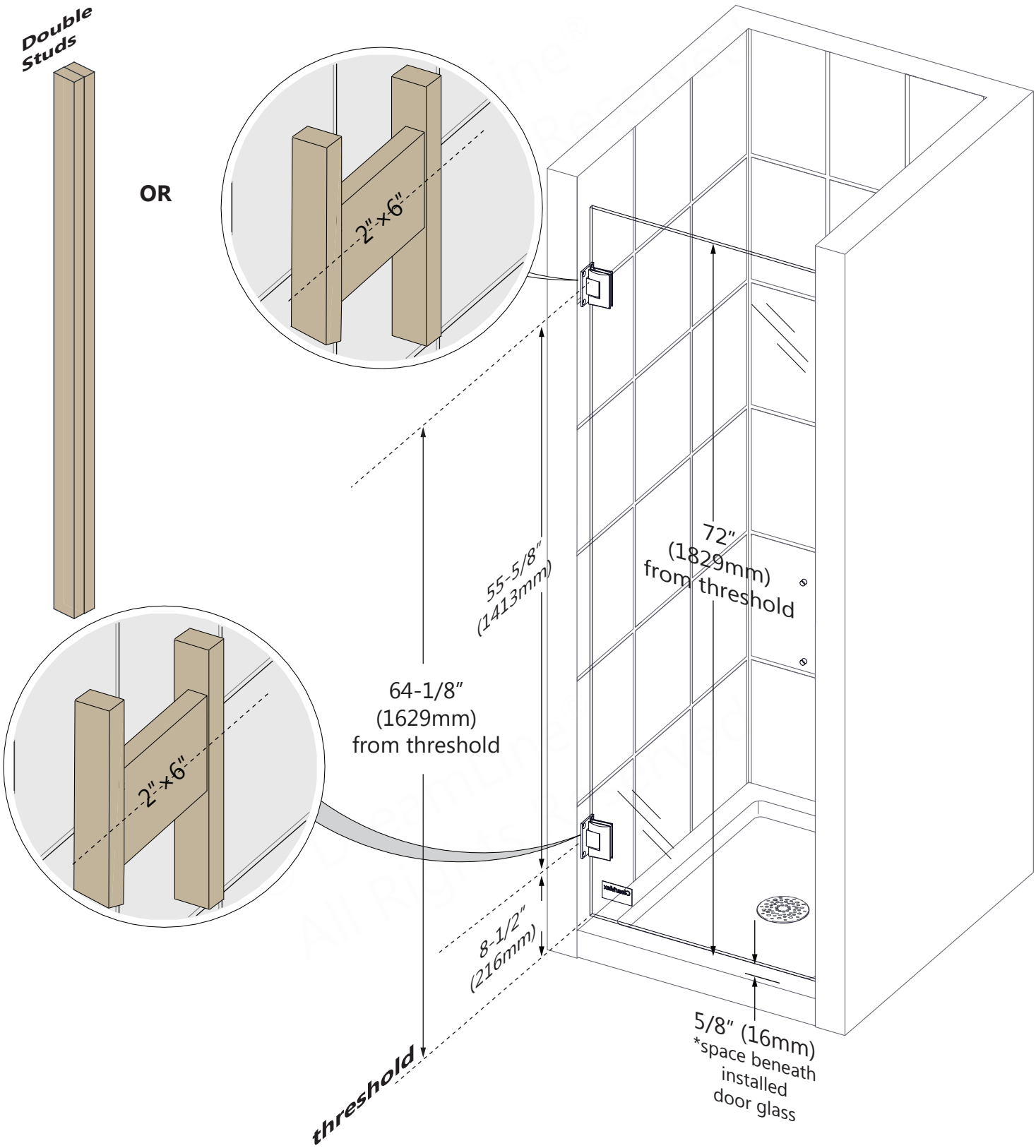

©2026 DreamLine® All Rights Reserved

UNIDOOR Glass-to-Wall Hinge and Handle Location

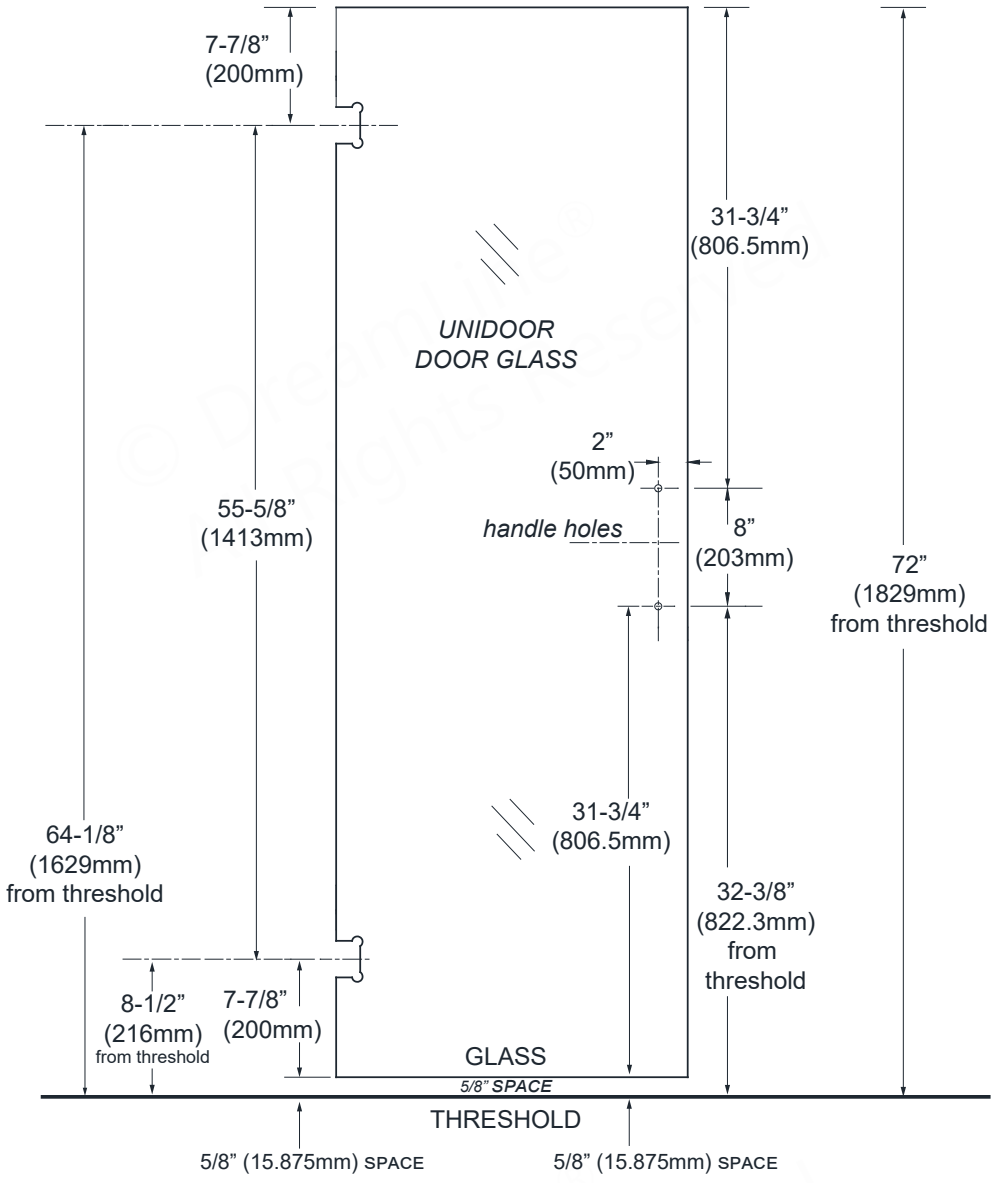

Hinge Assembly Wall Plate Hole Layout

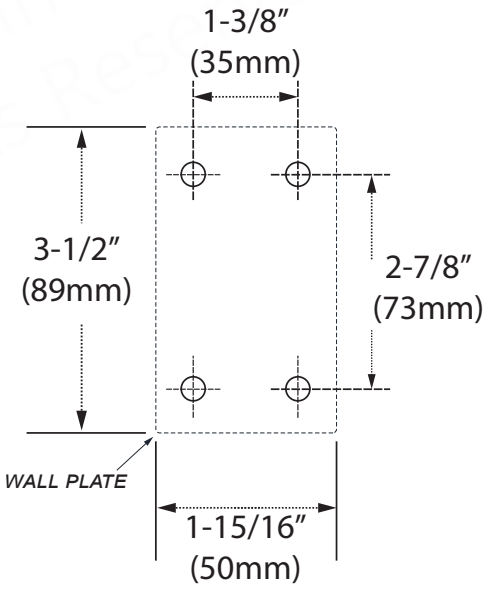

©2026 DreamLine® All Rights Reserved

UNIDOOR / PLUS / -LS / EDGE / TOULON Styles

left door-swing installations shown

NOTE

*** For the panel installation instructions, please refer to the separate manual included in the panel glass packaging.**

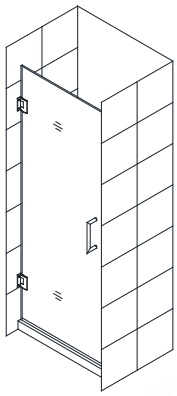

STYLE A

UNIDOOR / UNIDOOR-LS
UNIDOOR EDGE / UNIDOOR TOULON
Single Shower Door 23”-30” (**EDGE** model=24”)
*refer to the **Detailed Diagram** on **Page 9** of this manual to begin the installation.

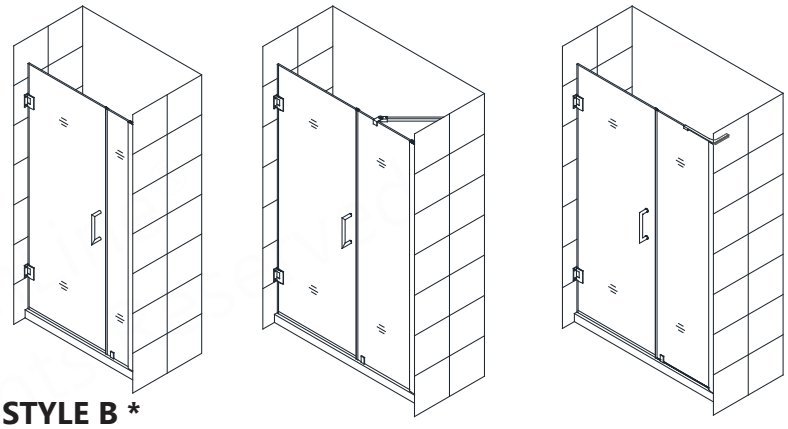

STYLE B *

UNIDOOR Shower Door 23” - 30” with a 6” -30” inline panel; (12”-30” inline panel includes Support Bar); Adjustable Wall Profile System
UNIDOOR-LS Shower Door 23”-30” with 6”-30” inline panel (12”-30” inline panel includes an L-Bar™); back-to-back handle; Adjustable Wall Profile System

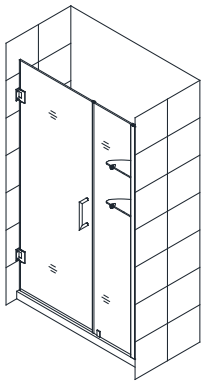

STYLE C *

UNIDOOR Shower Door 23”-30” with 12”-30” inline panel with Support Shelves and Adjustable Wall Profile System

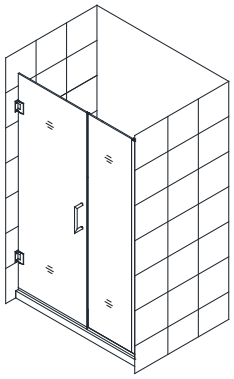

STYLE F *

UNIDOOR PLUS Shower Door 23”-30” with 6”-34” inline panel installed with U-Channels

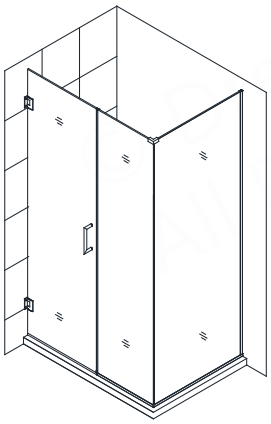

STYLE I *

UNIDOOR PLUS Shower Enclosure with 6”-34” inline panel and 30”-34” return panel installed with U-Channels

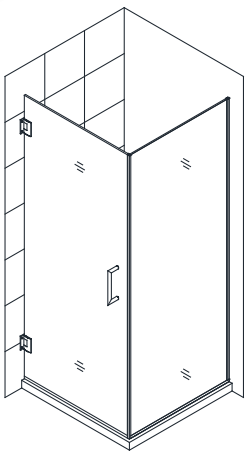

STYLE L *

UNIDOOR PLUS Shower Enclosure with 30” return panel installed with U-Channels

©2026 DreamLine® All Rights Reserved

UNIDOOR-X Styles

left door-swing installations shown

UNIDOOR-X (with glass-to-glass hinges)

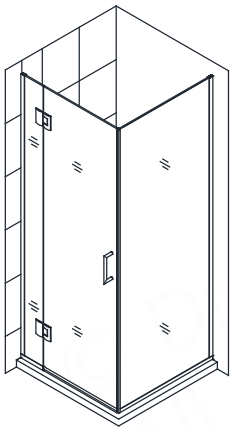

STYLE L1 *^°

UNIDOOR-X Shower 23”-30” with 6” hinge panel and 30”or 34” full height return panel installed with U-Channels

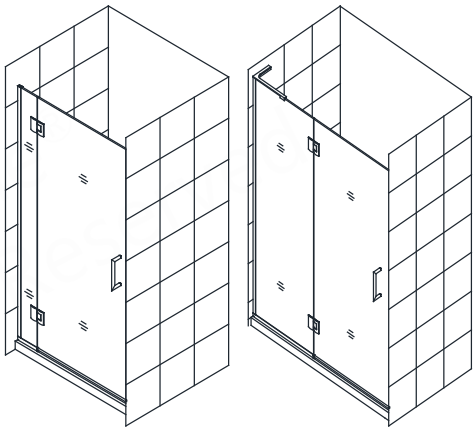

STYLE M *^°

UNIDOOR-X Shower Door 23”-30” with 6” or 24” hinge panel installed with U-Channels

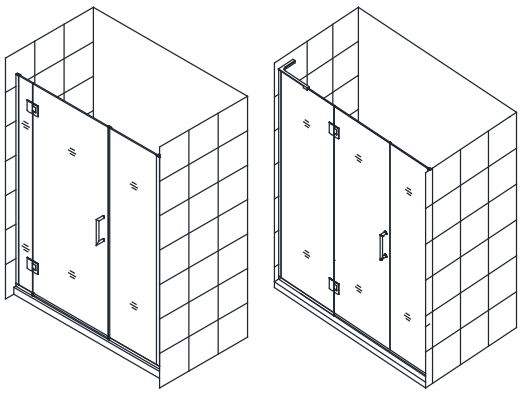

STYLE M1 *^°

UNIDOOR-X Shower Door 23”-30” with 6” or 24” hinge panel and with 6”, 6-1/2”, 14”, 14-1/2”, 22”, or 22-1/2” full height inline panel installed with U-Channels

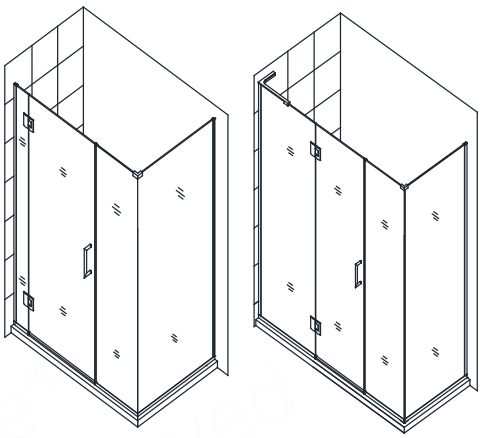

STYLE M3 *^°

UNIDOOR-X Shower Door 23”-30” with 6” or 24” hinge panel with 6”, 6-1/2”, 14”, 14-1/2”, 22”, 22-1/2” full height inline panel and 30”or 34” full height return panel installed with U-Channels

NOTE

*** For the panel installation instructions, please refer to the separate manual included in the panel glass packaging.**

^ For the Unidoor-X glass-to-glass door installation instructions, please refer to the separate manual included in the hinge panel glass packaging.

° Additional support required for hinge panel glass installation:
6” hinge panel requires a hinge panel glass bracket; 24” hinge panel requires an L-Bar™

©2026 DreamLine® All Rights Reserved

Model Specific Preparation

REQUIRED:

No Adjustment for Out-of-Plumb; Verify finished walls with a level

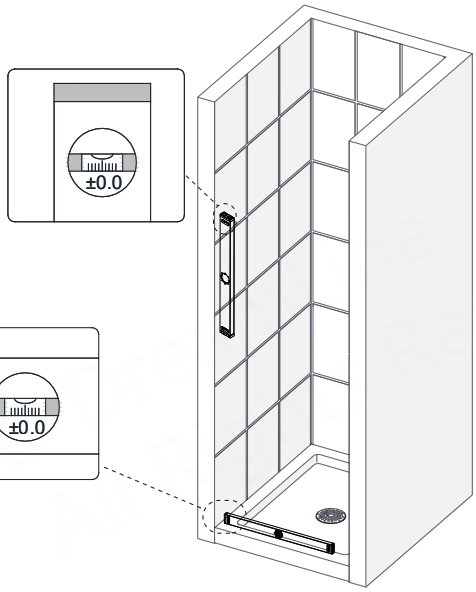

Threshold must be level



The PVC Hinge Spacers (#31) can be used to compensate for a minor out-of-plumb condition on the hinge-side wall up to 1/4" (6mm) and should only be used behind ONE Hinge Assembly (#05). Confirm the finished wall conditions with a level before drilling any holes. Unnecessary use of these spacers can compromise the fit of the door. (see Page 13 for more information)



Leave corner protectors on the glass until it is necessary to remove them!

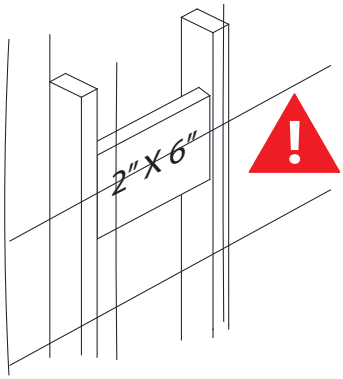

The glass-to-wall hinges require installation into a double stud or 2x6 wood reinforcement. (see page 3 for more information)

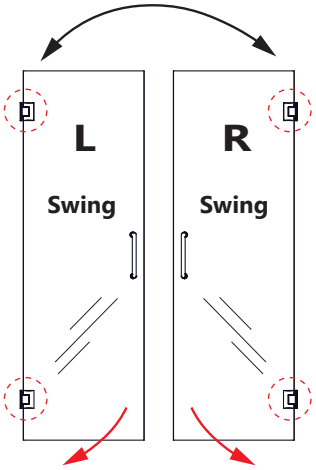

TIP

The UNIDOOR Series doors and enclosures are reversible for right or left-swing installation. The left-swing installation is shown as an example throughout this manual. For the right-swing installation, simply begin on the opposite wall and reverse the orientation of the steps shown.

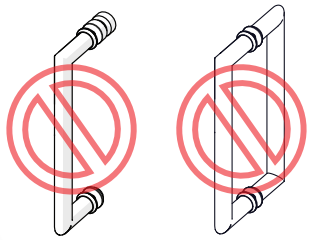

DO NOT attach the Handle to the Door Glass until instructed. DO NOT use the handle to lift the glass during installation. This may result in damage to the glass and/or serious personal injury. Always use an assistant and/or a professional-grade glass suction cup when handling heavy glass panels.

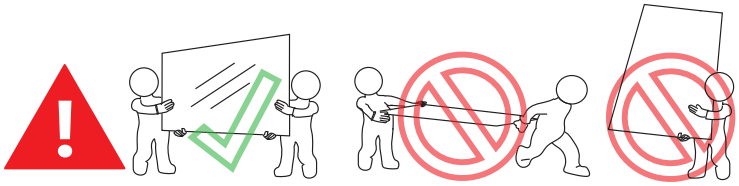

Professional installation and two installers recommended for this model.

©2026 DreamLine® All Rights Reserved

Tools



Level

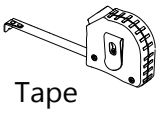

Tape Measure

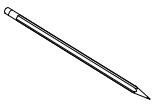

Pencil

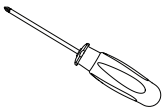

#2 Phillips Screwdriver



Power Drill



#2 Phillips driver bit



Extended driver bit



Drill Bit Ø1/8" (3mm)



Drill Bit Ø1/4" (6mm)



Diamond-Tipped Drill Bit Ø1/4" (6mm) (Optional--for porcelain tile)



Razor Knife

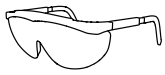

Safety Glasses



Work Gloves

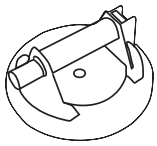

Professional-grade Glass suction cup
(Optional but Recommended)

© DreamLine All Rights Reserved

TIP

Verify that the correct model size has been ordered: measure the finished opening **before** proceeding with the installation.

Confirm that the finished walls are plumb and the threshold is level and pitched into the shower area.

Cover the shower/tub drain with tape prior to installation to prevent the loss of screws or small parts.

To prevent stripping the screw heads, set power drill to a low setting when installing screws.

NOTE

Unpack your unit carefully and inspect it. Lay it out and identify all parts using the **Detailed Diagram** on **page 9** and the included packing list in this manual as a reference. Before discarding the carton, check for small hardware bags that may have fallen to the bottom of the box. If any parts are damaged or missing, please contact DreamLine® for replacement. The shipping boxes may contain extra parts not used in your model configuration.

NOTE

Retain these installation instructions for future reference.

©2026 DreamLine® All Rights Reserved

Detailed Diagram of Shower Door Components

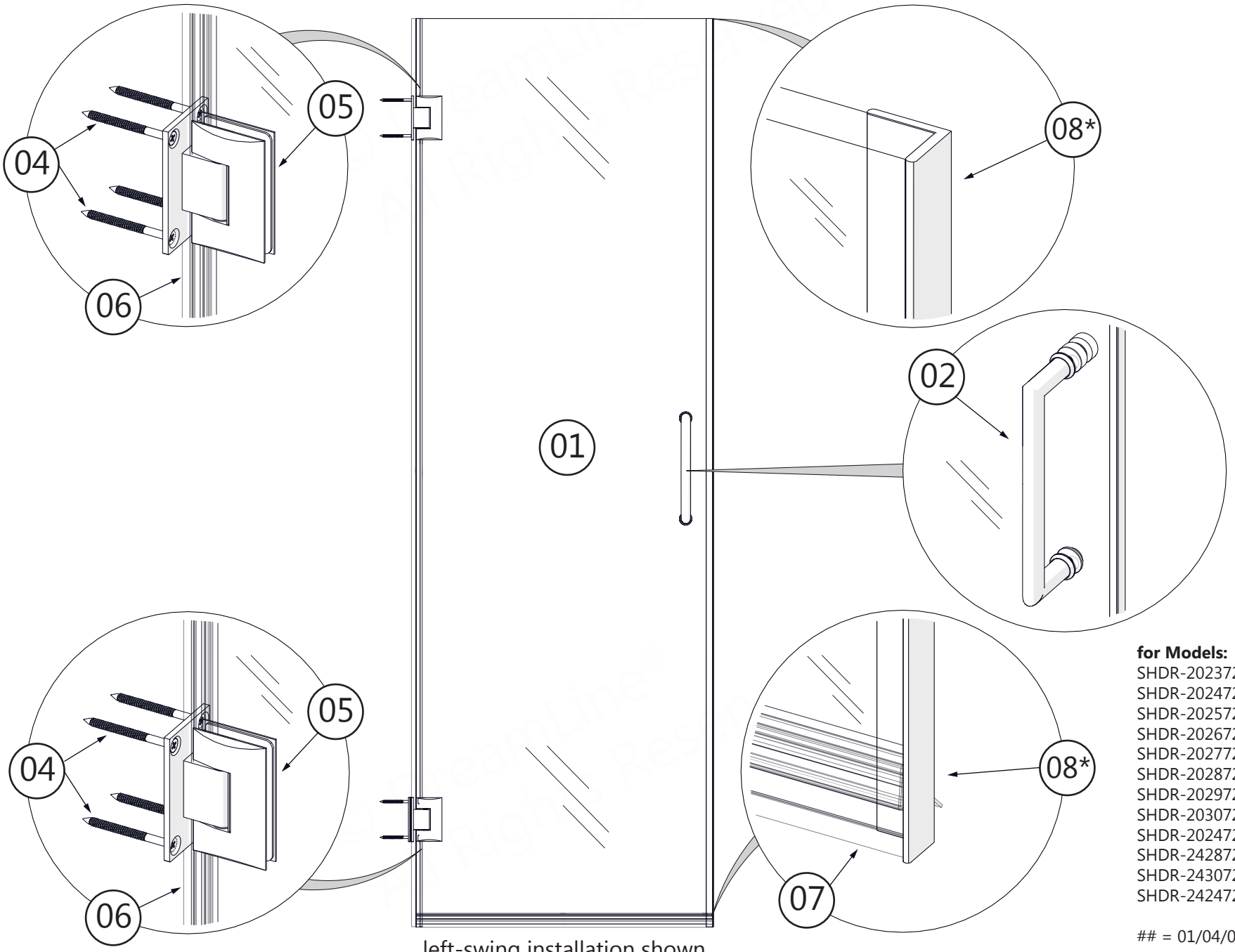

left-swing installation shown

for Models:
SHDR-20237210F-##
SHDR-20247210F-##
SHDR-20257210F-##
SHDR-20267210F-##
SHDR-20277210F-##
SHDR-20287210F-##
SHDR-20297210F-##
SHDR-20307210F-##
SHDR-202472E-89
SHDR-2428720-89
SHDR-2430720-89
SHDR-2424720-89

= 01/04/06/09

©2026 DreamLine® All Rights Reserved

Parts List

01

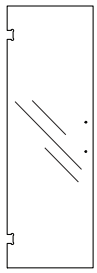

Door Glass x1

02

handle styles may vary by model

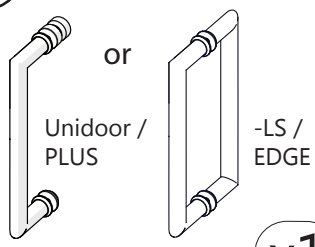

Handle x1

04

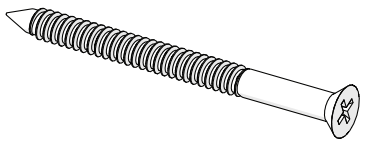

ST5.5 × 70mm Countersunk Screw x8

05

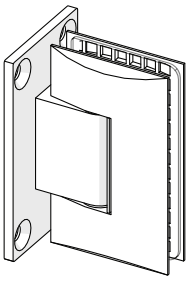

Hinge Assembly x2

06

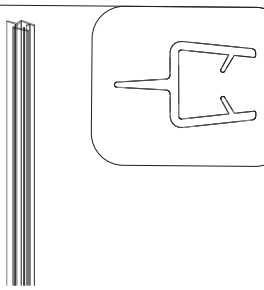

Hinge-Side Vinyl Seal x1

07

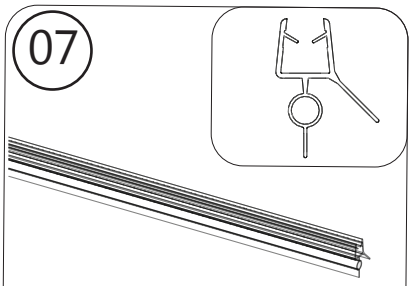

Bottom Sweep Vinyl Seal x1

08*

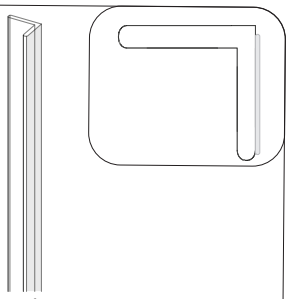

L-Strike Vinyl (with VHB Tape) x1

31^

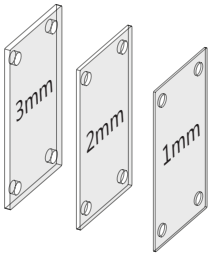

PVC Hinge Spacer (1mm, 2mm, 3mm) 1 set

*** item #08 (L-Strike Vinyl with VHB Tape) used with single door installation only**
^item #31 (PVC Hinge Spacer) use only as necessary

19**

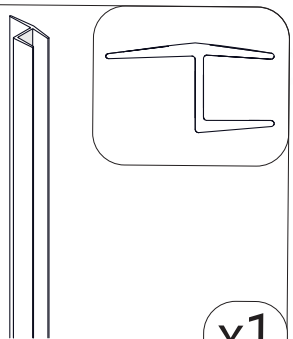

180° Inline Strike Vinyl x1

**** item #19 (180˚ strike vinyl)** ships with the UNIDOOR EDGE door glass and is **not used** with single door installation

©2026 DreamLine® All Rights Reserved

Specifications

NOTE

The following shower door installation instructions should be used as a general guide and prerequisite to the installation of the UNIDOOR, UNIDOOR PLUS, UNIDOOR-LS, UNIDOOR EDGE, UNIDOOR TOULON models. (for Unidoor-X models, use the manual packaged with the hinge panel glass in place of this manual).
Before you begin the installation, check your finished opening size.
Specific model size information can be found in the Tech Drawings on DreamLine.com

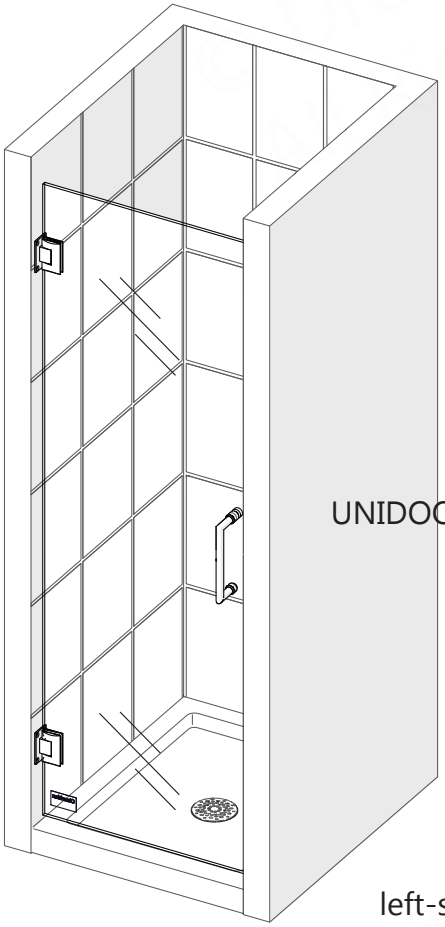

UNIDOOR

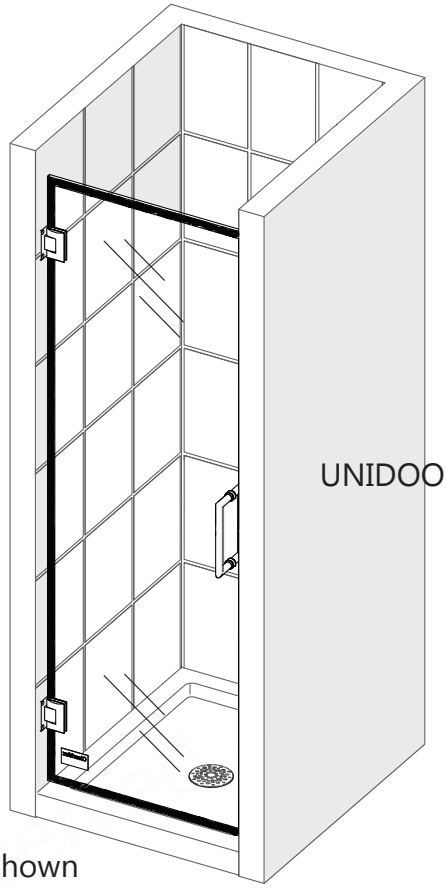

UNIDOOR EDGE

left-swing installation shown

<u>For Enclosure Models that include Return Panel Glass:</u>
<u>Styles: I, J, L, L1, M3 and M4</u>

FIRST, before starting the door installation, <u>it is important to review the Shower Enclosure Plan and Overview in the manual that is packaged with the Return Panel Glass</u> to verify the model dimensions for proper placement of the Door Glass (#01) for accurate alignment with the Enclosure Panel Glass.

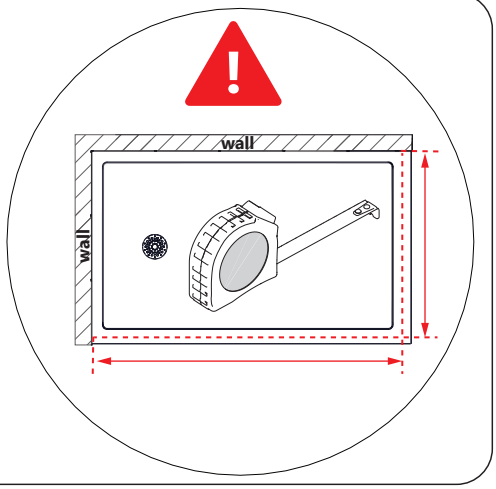

©2026 DreamLine® All Rights Reserved

Installation Steps

1

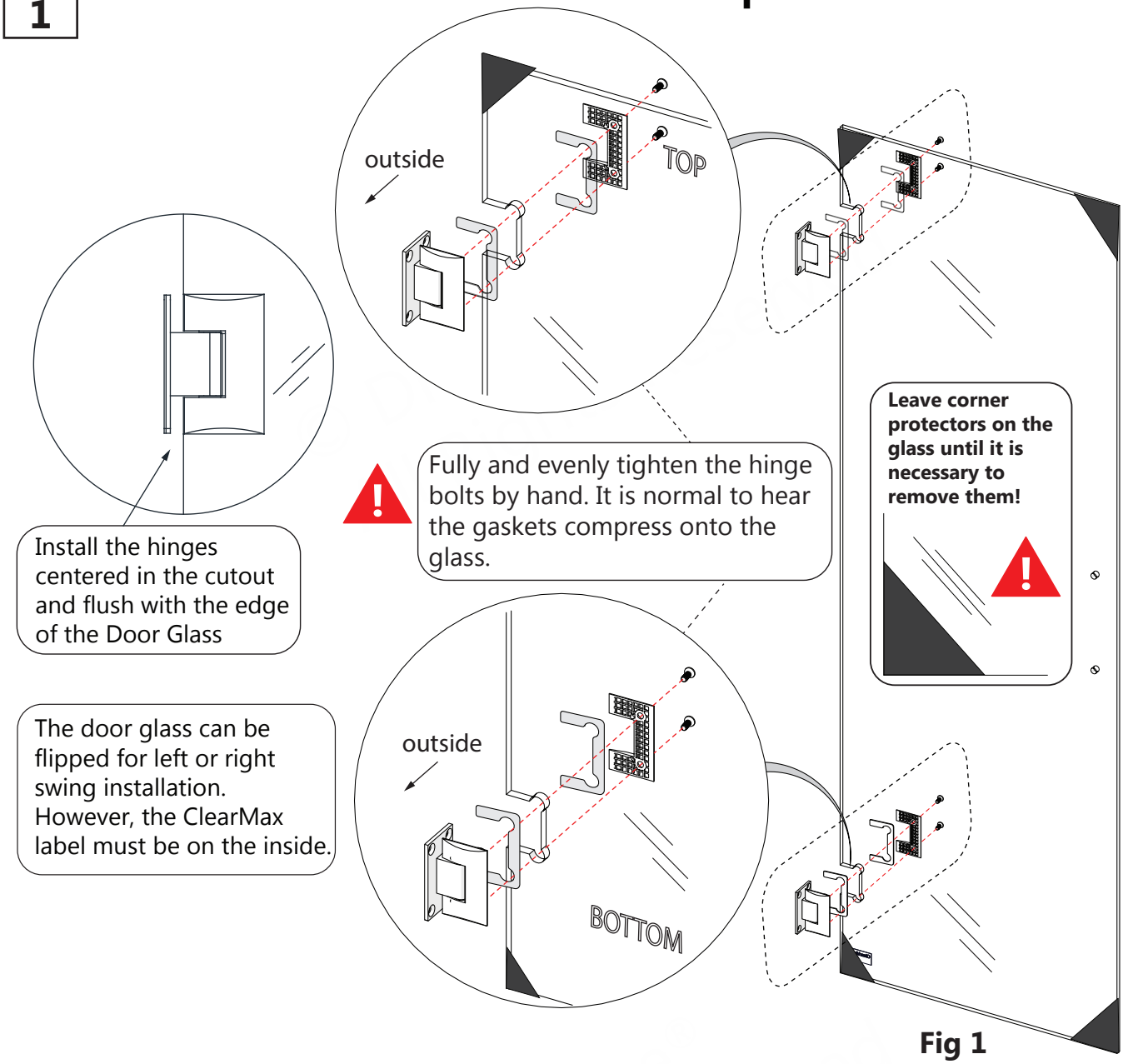

Fig 1

left-swing installation shown

NOTE

The Adjustable Hinge Assemblies are factory pre-set to overclose to 85° to create a tight seal with the Strike Vinyl. See Page 21 for Hinge Adjustment details after installation.

TIP

Clean the **Hinge gaskets** and the glass around the hinge notch with an alcohol swab or glass cleaner prior to attaching the **Hinge Assemblies (#05)** to the **Door Glass (#01)**.

Never set glass down directly onto a tile or concrete floor surface. Always use a piece of wood or cardboard and leave the corner protectors and shims on the glass until it becomes necessary to remove them. Always protect the bottom edge and corners of the glass from damage which could lead to breakage and/or serious personal injury.

Parts Needed

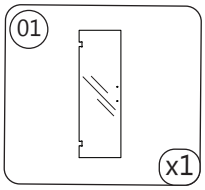

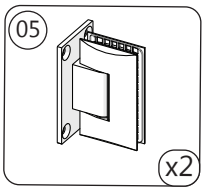

Tools Needed



©2026 DreamLine® All Rights Reserved

1a

PVC Hinge Spacer Information
(use only if necessary)

Hinge side wall out at the top

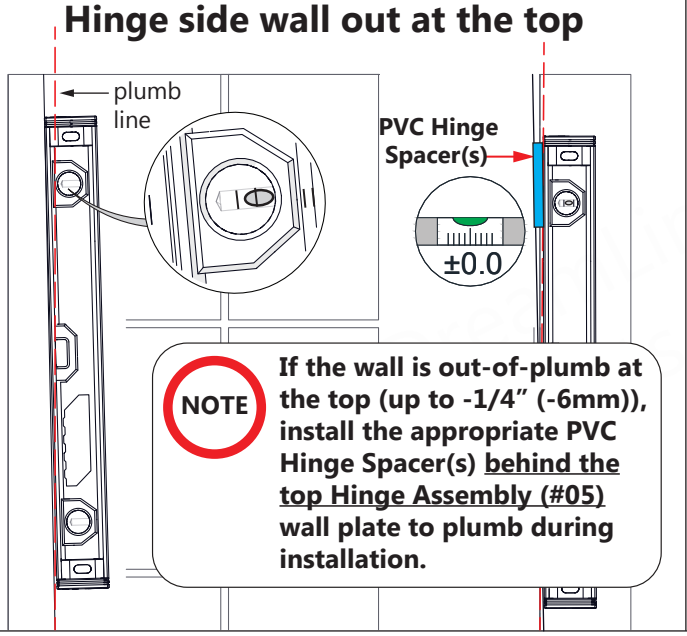

NOTE If the wall is out-of-plumb at the top (up to -1/4" (-6mm)), install the appropriate PVC Hinge Spacer(s) behind the top Hinge Assembly (#05) wall plate to plumb during installation.

Hinge side wall out at the bottom

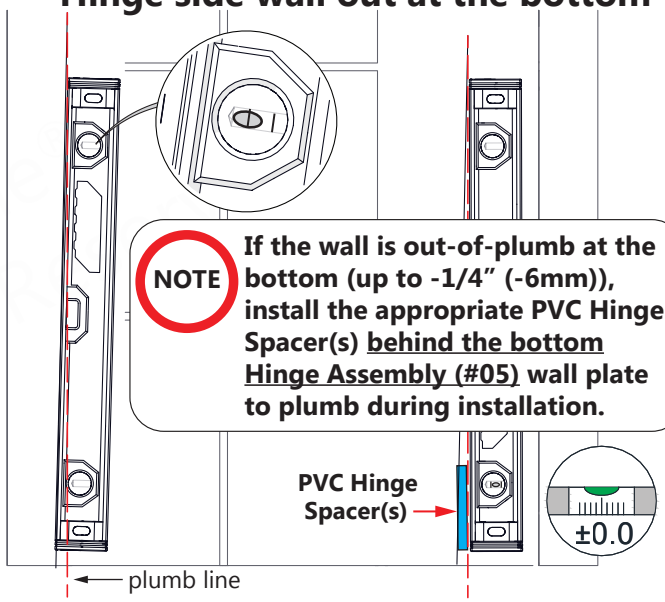

NOTE If the wall is out-of-plumb at the bottom (up to -1/4" (-6mm)), install the appropriate PVC Hinge Spacer(s) behind the bottom Hinge Assembly (#05) wall plate to plumb during installation.

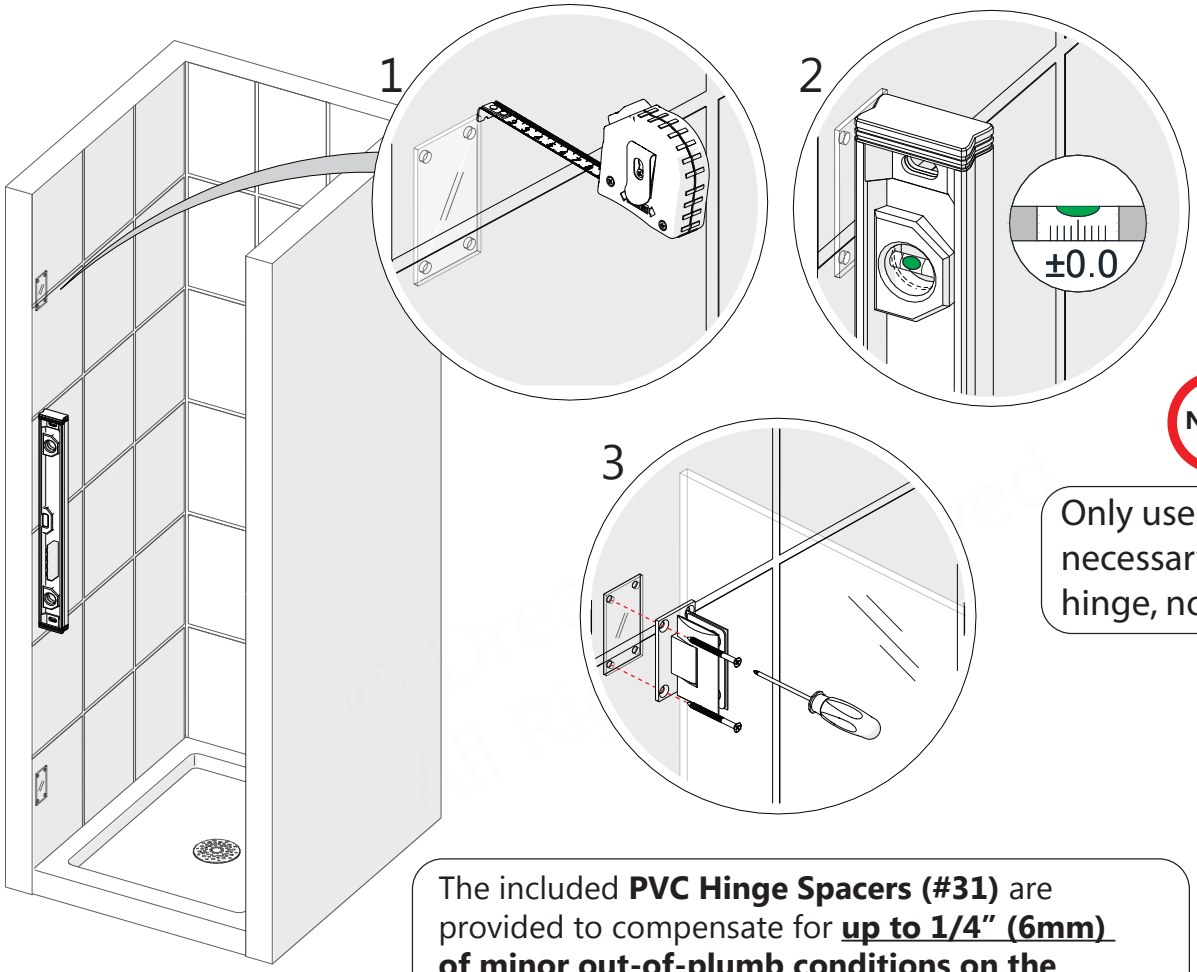

Fig 1a

NOTE Only use spacer(s) as necessary behind one hinge, not both.

The included **PVC Hinge Spacers (#31)** are provided to compensate for **up to 1/4" (6mm) of minor out-of-plumb conditions on the hinge-side wall.** Unnecessary use of the PVC Hinge Spacers could reduce the required opening size for the door glass.

Parts Needed

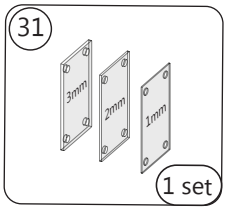

Tools Needed

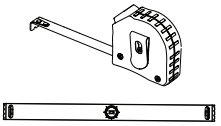

©2026 DreamLine® All Rights Reserved

©2026 DreamLine® All Rights Reserved

2

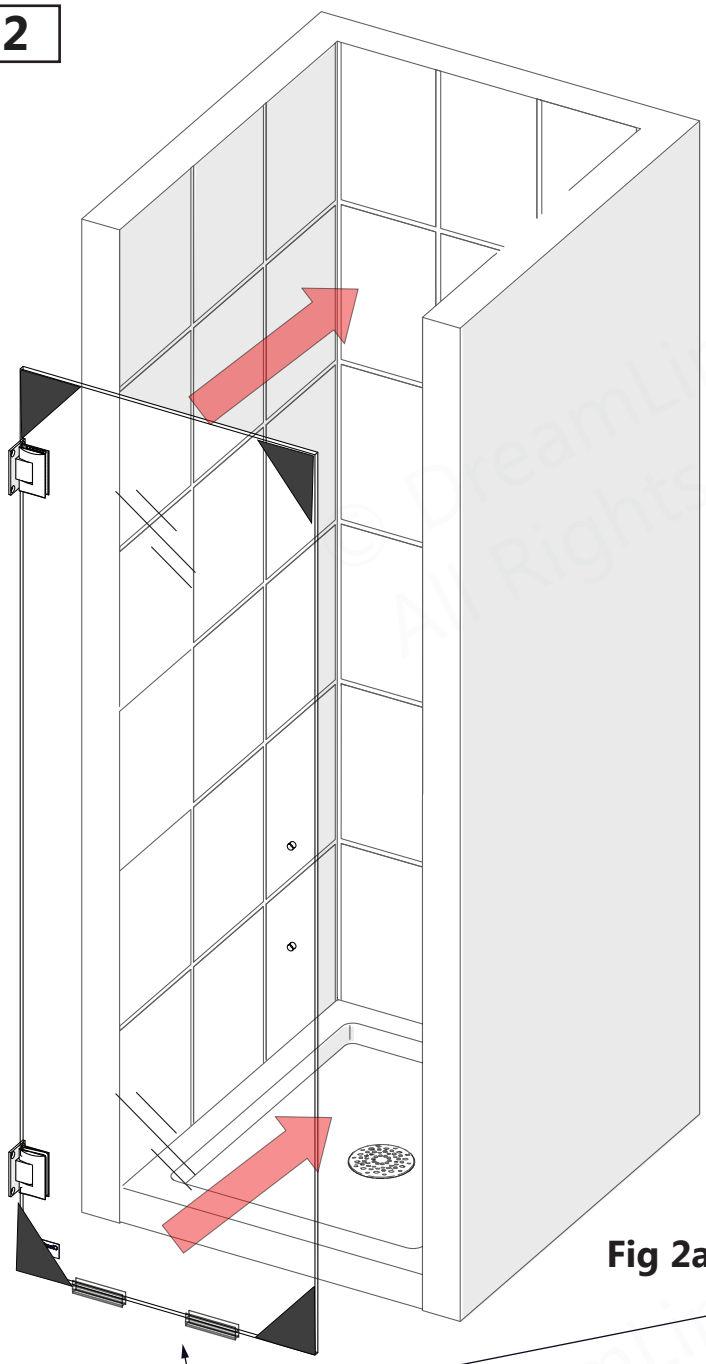

Fig 2a

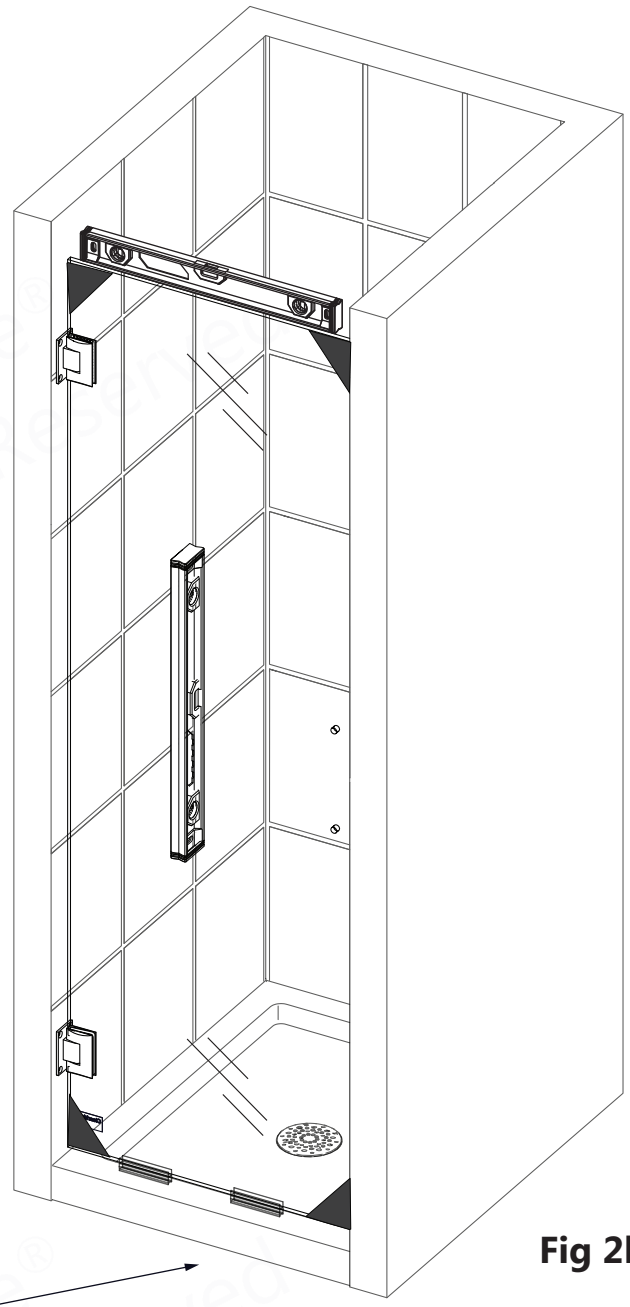

Fig 2b

left-swing installation shown

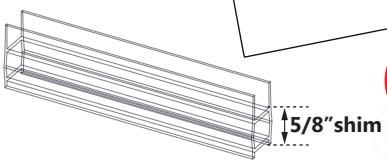

NOTE

Use the provided 5/8" (16mm) spacer shims when positioning the **Door Glass (#01)** to maintain the proper spacing between the bottom of the Door Glass and the threshold. Secure the spacers to the glass with tape if necessary. (5/8" (15.9 mm) wood or plastic shims may also be used on the threshold)

Check the **Door Glass (#01)** with a level to verify it is plumb BEFORE marking the **Hinge Assembly (#05)** positions on the wall.

TIP

Use the 72" (1829 mm) **L-Strike Vinyl (#08)** or **180° Inline Strike Vinyl (#19)** as a height reference to be sure that the installed Door Glass height will be 72" (1829 mm). This is especially important when installing the door along with an inline panel.

Tools Needed

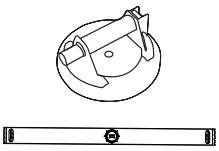

3

TIP

Cover the face of each hinge with tape and use an extension bit holder to avoid scratching the finished surface of the hinges.

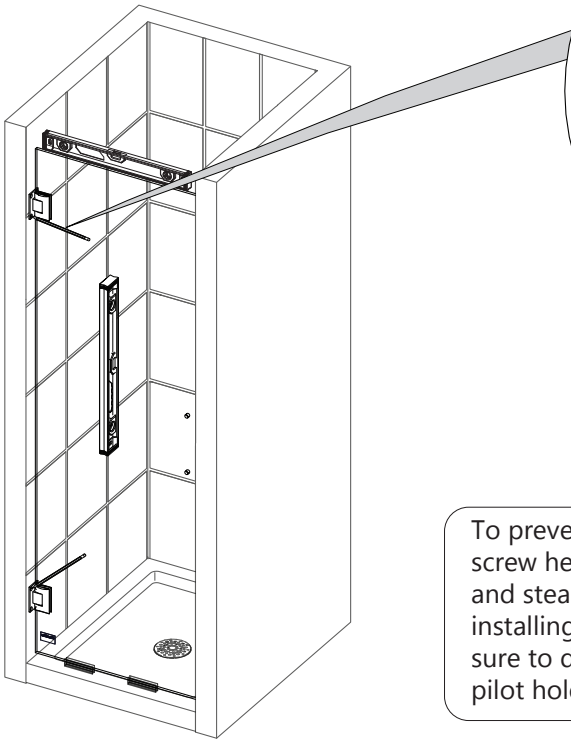

1

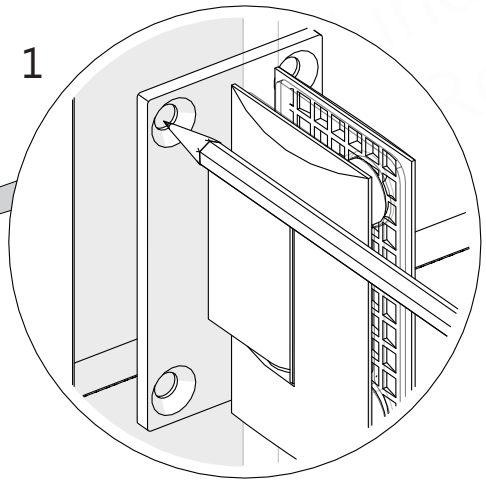

2

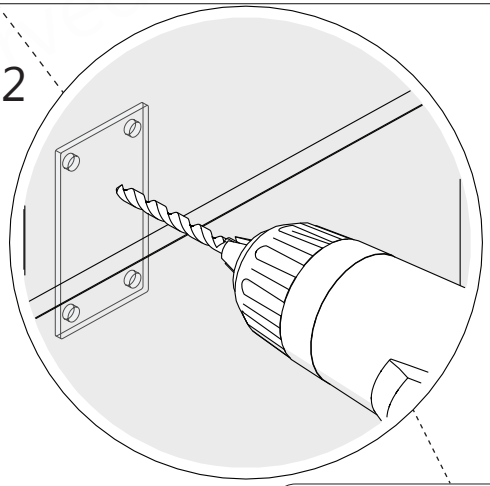

TIP

The **PVC Hinge Spacers (#31)** can be used as a template when marking the hinge mounting holes

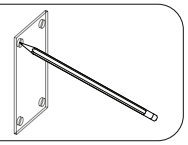

NOTE

Use a diamond-tipped bit and low torque when drilling into porcelain or other hard tile surface. Follow the drill bit manufacturer's guidelines for proper use.

TIP

To prevent stripping the screw heads, use low torque and steady pressure when installing the screws. Make sure to drill Ø1/8" (3mm) pilot holes into the studs.

3*

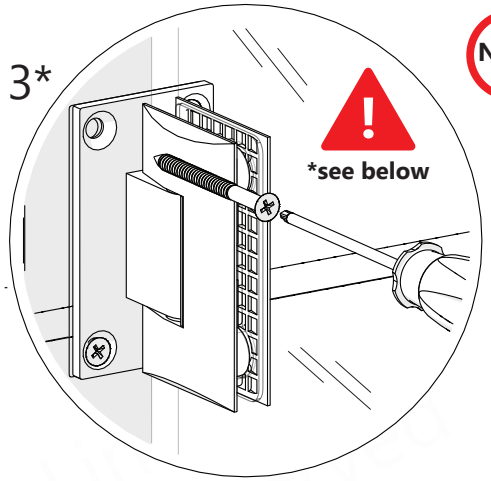

Fig 3

Parts Needed

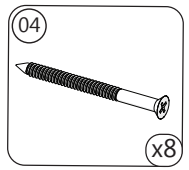

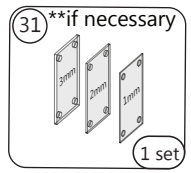

Tools Needed

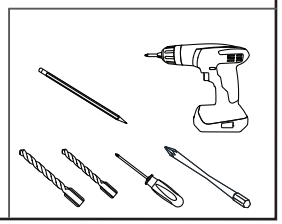

NOTE

For installation into a **stud** or other **wood reinforcement** behind the finished wall **(Required)**:

- drill a **Ø1/4"(6mm)** hole up to the stud, drill an **Ø1/8"(3mm)** pilot hole into the stud and use the **ST5.5 x 70mm Countersunk Screws (#04).**

***If Minor Out-of-Plumb Conditions were found in Step 1a:**

Use **PVC Hinge Spacer(s) (#31)** behind the **Hinge Assembly (#05)** before securing them to the wall with the **ST5.5×70mm Countersunk Screws (#04)**

©2026 DreamLine® All Rights Reserved

4

Hinge Blocking Procedure

NOTE

Be sure to use the thicker, **2mm** vinyl gaskets on each side of the hinges. Cut 3/8" squares from the extra 1mm gaskets and insert them in any gaps between the hinge body and the glass. Apply a medium-strength thread lock (not included) to the hinge bolts. Tighten the hinge bolts firmly using a screw gun and a **4mm hex bit** and cover the hinge bolts with the decorative covers. **Fig 4**

(Thread lock not included)

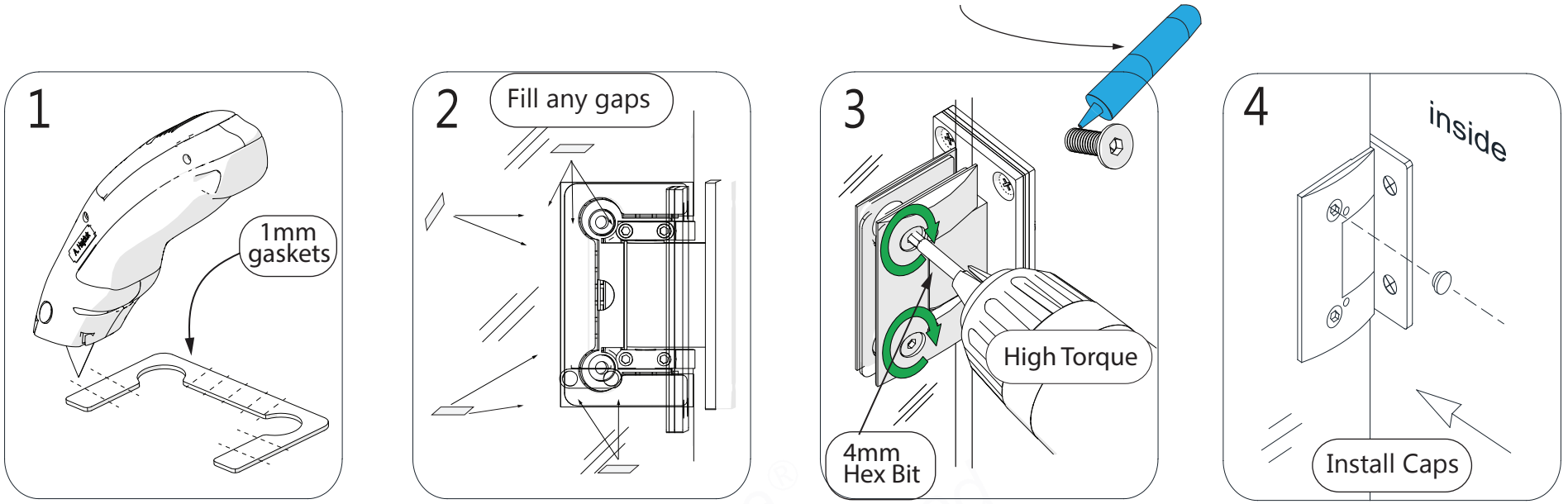

TIP

Be sure the Door Glass is Level and plumb before tightening. Keeping the glass edge flush with the inside edge of the hinge can be helpful in aligning th Door Glass. **Fig 4**

Tools Needed

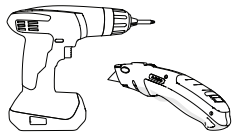

©2026 DreamLine® All Rights Reserved

Handle Assembly Installation

(handle style may vary by model)

5

Single-sided Handle

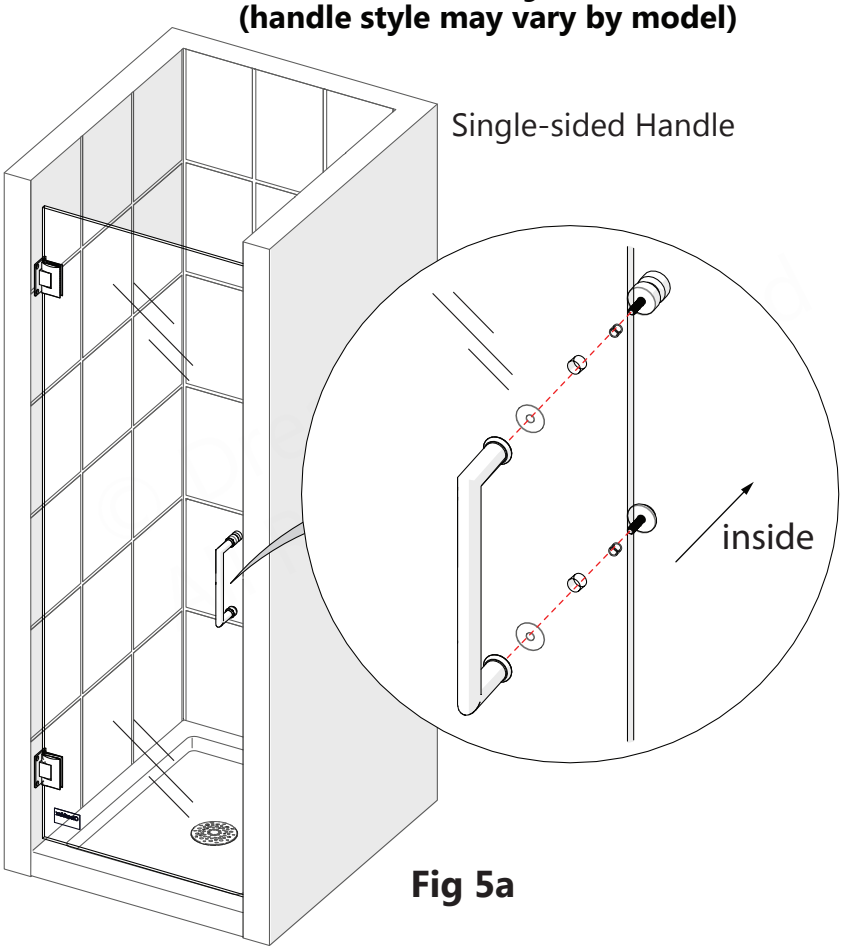

Fig 5a

Back-to-Back Handle

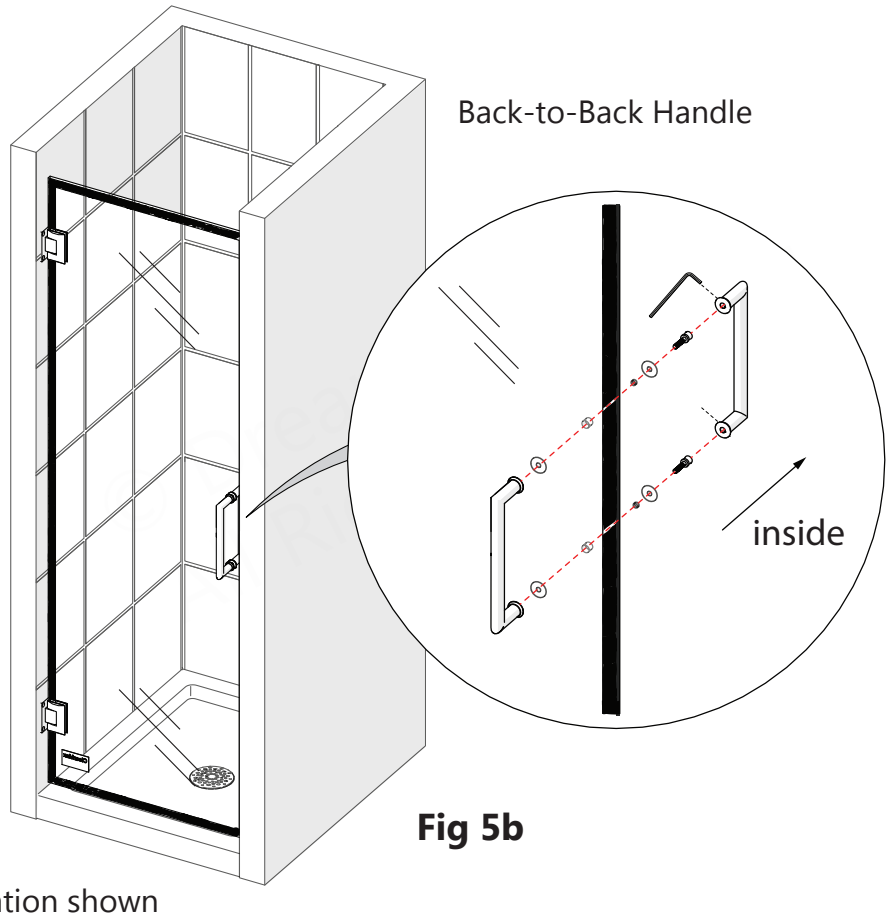

Fig 5b

left-swing installation shown

Parts Needed

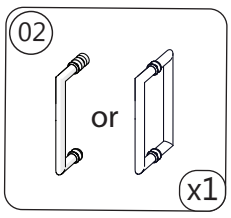

Tools Needed



©2026 DreamLine® All Rights Reserved

Sweep Vinyl Seal Installation

6

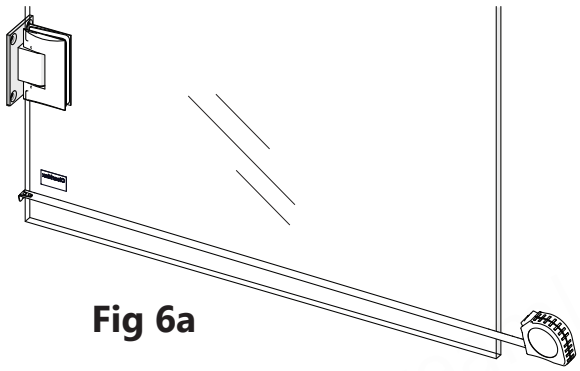

Fig 6a

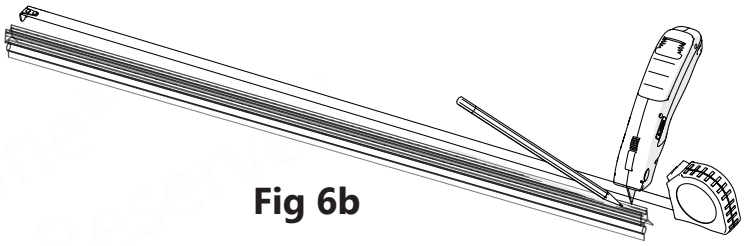

Fig 6b

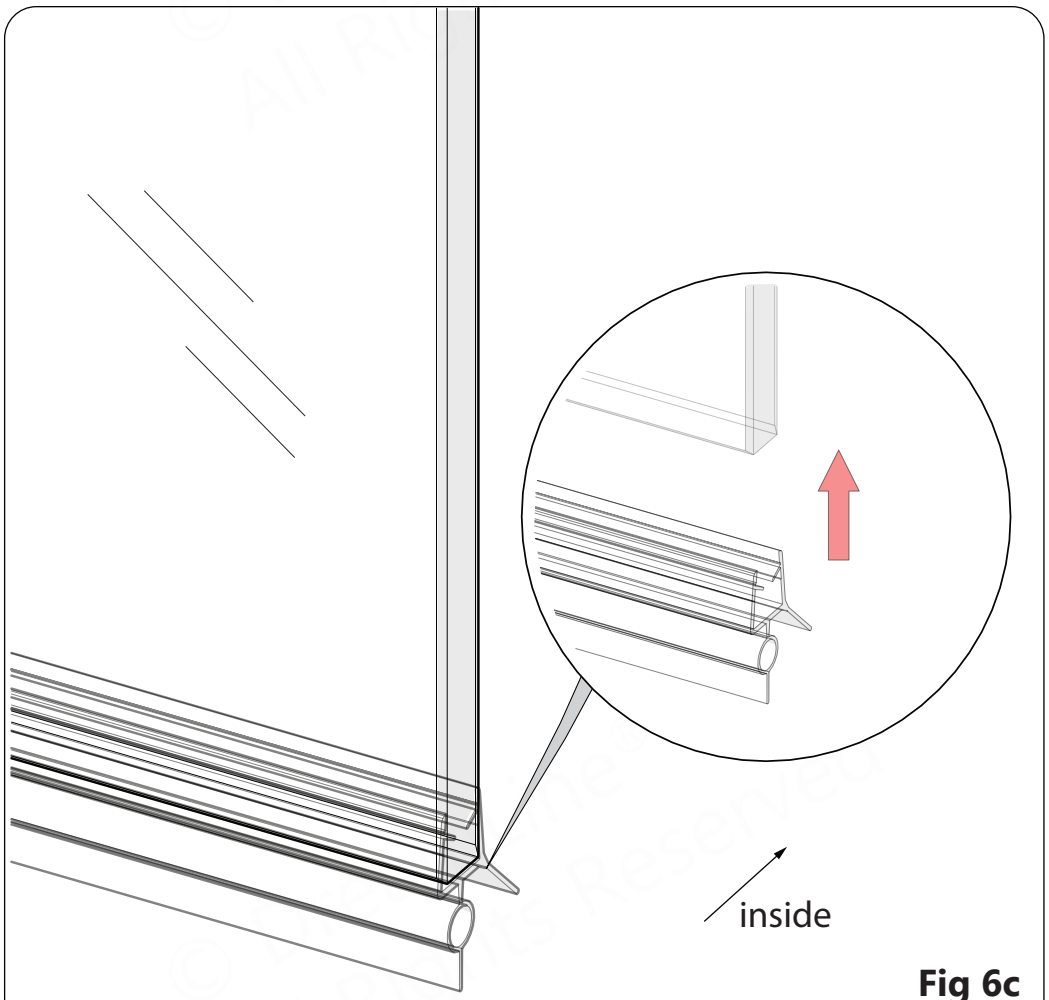

Fig 6c

Parts Needed

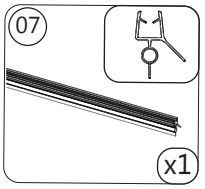

Tools Needed

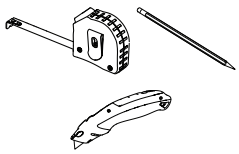

NOTE If necessary, cut the **Bottom Sweep Vinyl Seal (#07)** to match the width of the **Door Glass (#01)**.

NOTE Press the **Bottom Sweep Vinyl Seal (#07)** onto the bottom edge of the **Door Glass (#01)**.

©2026 DreamLine® All Rights Reserved

Hinge Side Vinyl Seal Installation

7a

NOTE

Cut the **Hinge Side Vinyl Seal (#06)** into three sections with a razor utility knife and notch according to the diagram on the next page to fit around the hinges and sweep vinyl to prevent leakage. **Fig 7a**

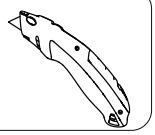

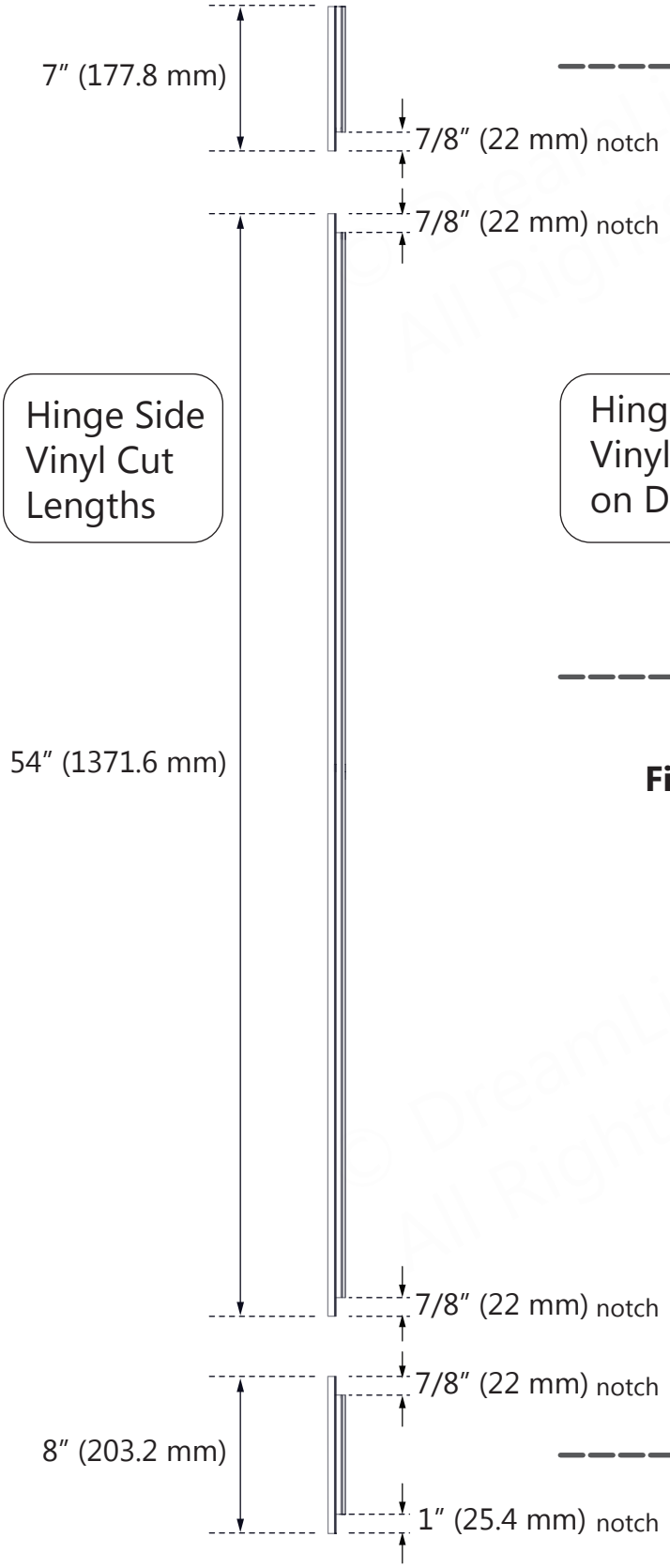

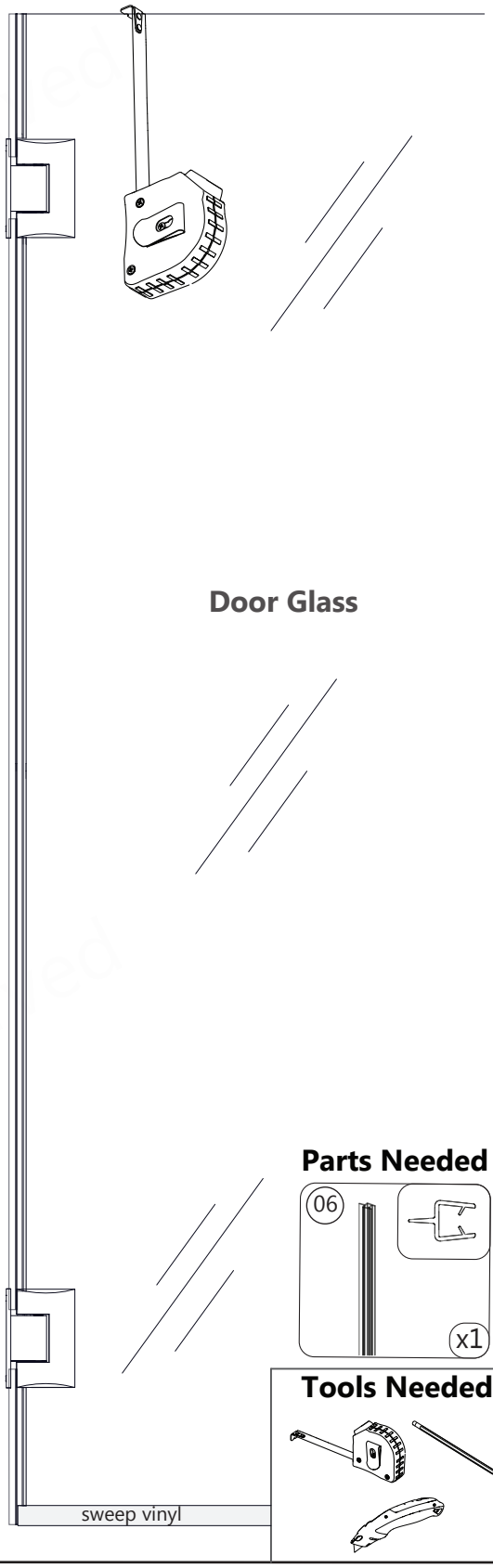

Fig 7a

Parts Needed

Tools Needed

©2026 DreamLine® All Rights Reserved

Hinge Side Vinyl Seal Installation

7b

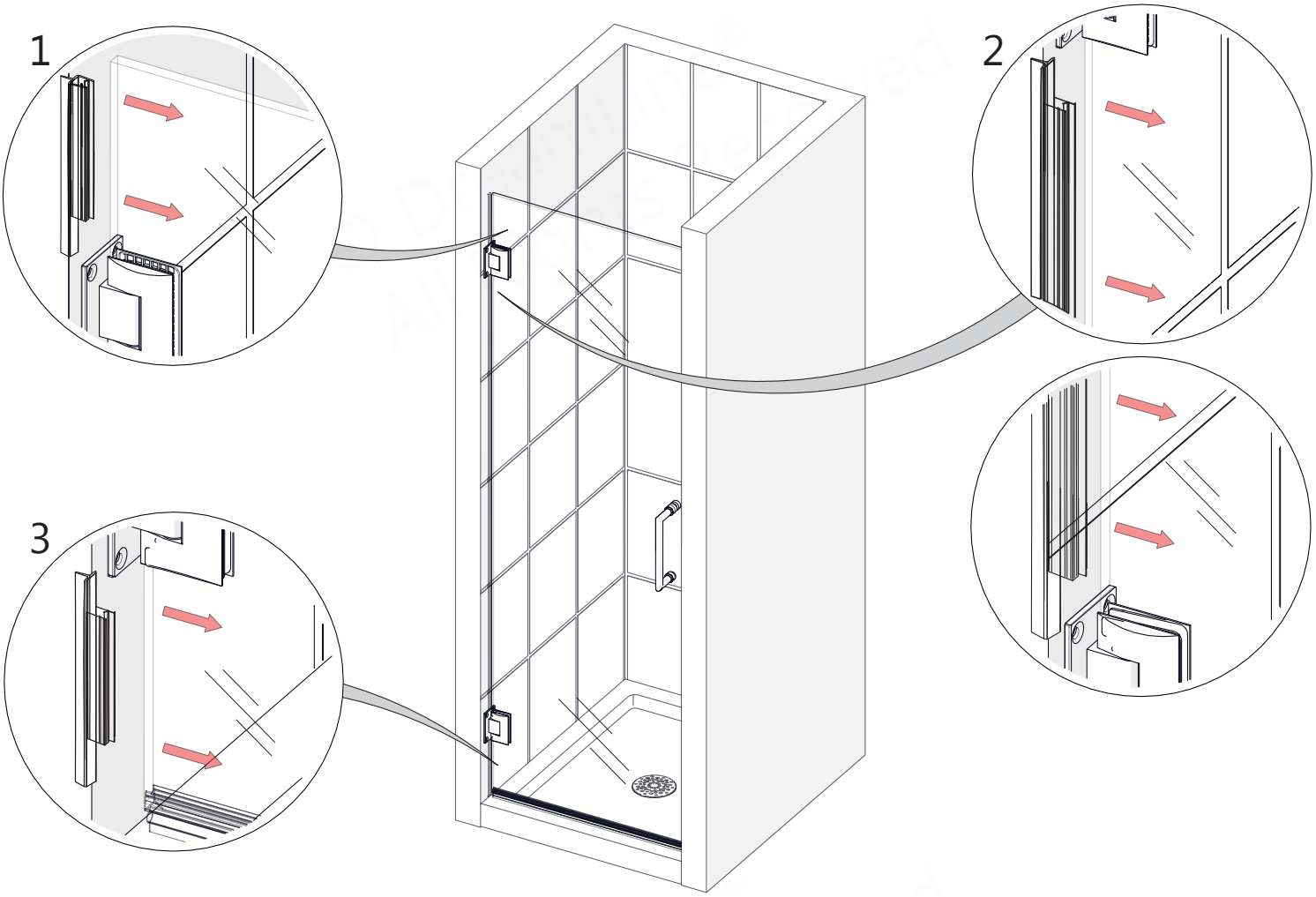

Fig 7b

left-swing installation shown



This completes the installation of the Door Glass.

- **For Single Shower Door installation, proceed to the next step.**
- **For models that include additional Panel Glass: Refer to the manual that is packaged with the Panel Glass to continue with the installation.**

©2026 DreamLine® All Rights Reserved

Hinge Assembly Adjustment

NOTE

The hinge assemblies are preset to overclose to 85° for a tight seal against the strike vinyl. The adjustment feature on the hinge assemblies is used to change the closing angle of the door only. It is NOT necessary, but may be desired by some. For single door models, make any adjustments to the hinges before installing the L-Strike vinyl w/VHB tape in **Step #8**.
Both the top and bottom Hinge Assemblies must be adjusted at the same time and to the same angle during adjustment.

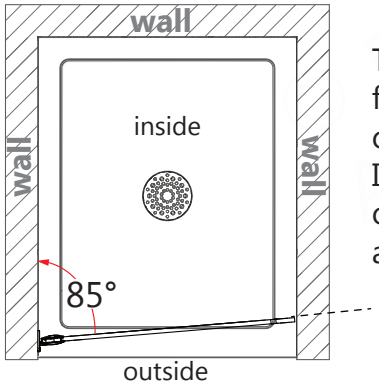

hinges adjusted to overclose before installing the strike vinyl seal

The Adjustable Hinge Assemblies are factory pre-set to overclose to 85° to create a tight seal with the Strike Vinyl. If strike vinyl is not used, the hinges can be adjusted to close to a different angle (90° for example).

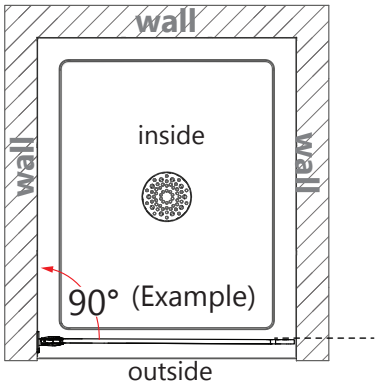

Overview of UNIDOOR left-swing installation shown

Adjusting the Hinge Assemblies

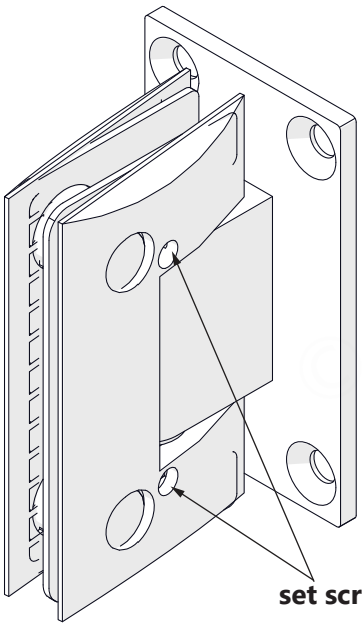

Once the **Door Glass (#01)** is installed:

- Hold the door in the closed position and loosen the adjustment set screws on **both** hinges with the supplied Allen Key
- Move the door to the new desired closed position
- While holding the door in the new closed position, retighten the set screws on **both** hinges
- The Door Glass will now close to the new closed position

Tools Needed



©2026 DreamLine® All Rights Reserved

8

L-Strike Vinyl Seal Installation
(for single shower door installation only)

NOTE

The surfaces need to be clean and free of debris before installing the L-Strike Vinyl Seal (#08)

Before attaching the **L-Strike Vinyl Seal (#08)** to the wall, make sure the **hinges** are set to overclose when in the closed position. Refer to **page 21** for more information on the adjustable **Hinge Assemblies (#05)**,.

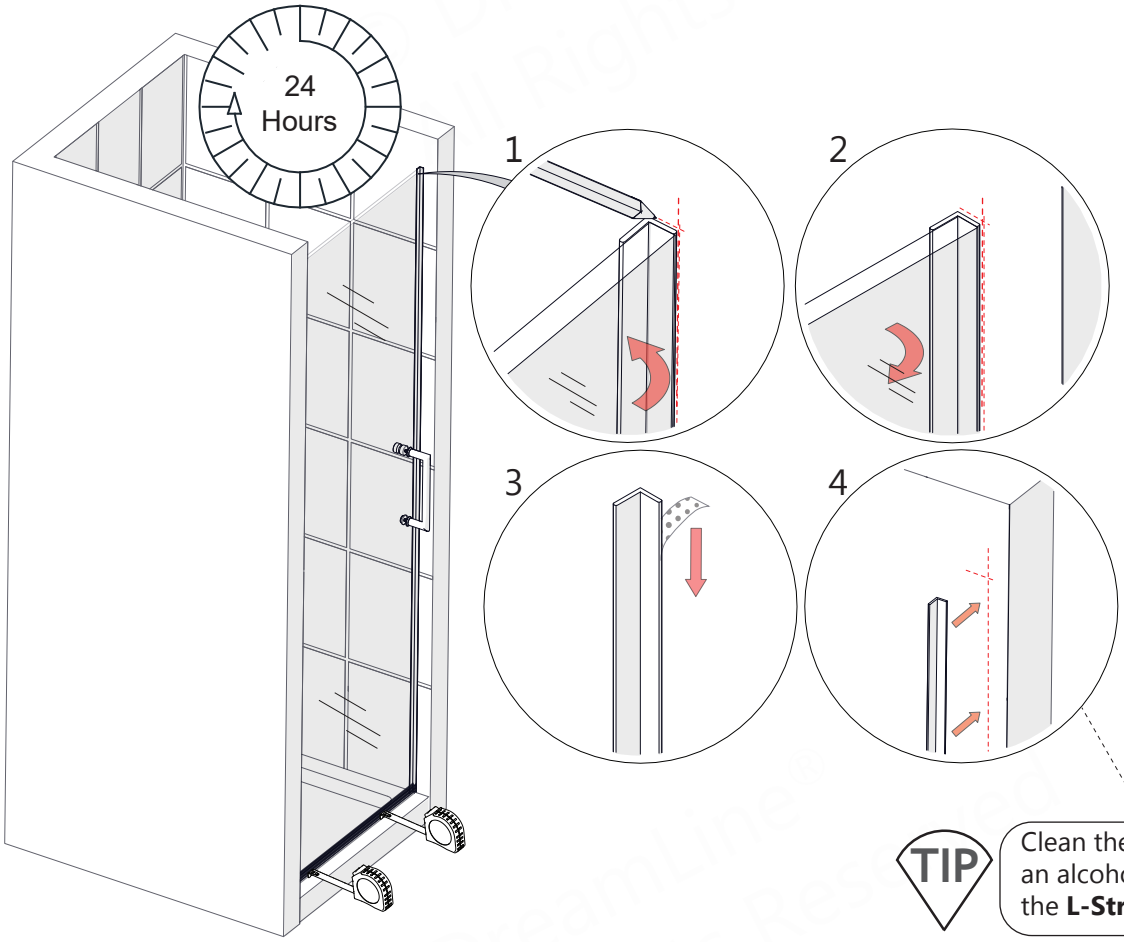

TIP

Clean the intended surface area with an alcohol swab prior to attaching the **L-Strike Vinyl (#08)** to the wall.

left-swing installation shown

NOTE

Hold the door in the closed position, parallel with the threshold, to mark the location of the **L-Strike Vinyl Seal (#08)**. The adhesive will work best if you **Allow 24 hours for the adhesive to fully set before use!**

Parts Needed

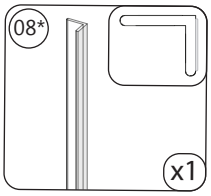

©2026 DreamLine® All Rights Reserved

Bottom Sweep Vinyl - Tip

TIP Notch the **Bottom Sweep Vinyl (#07)** on the inside where it overlaps the Strike Vinyl.

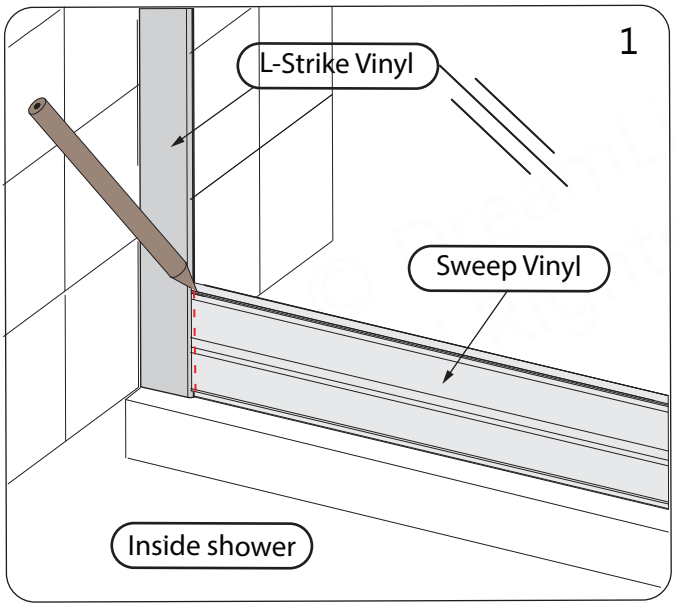

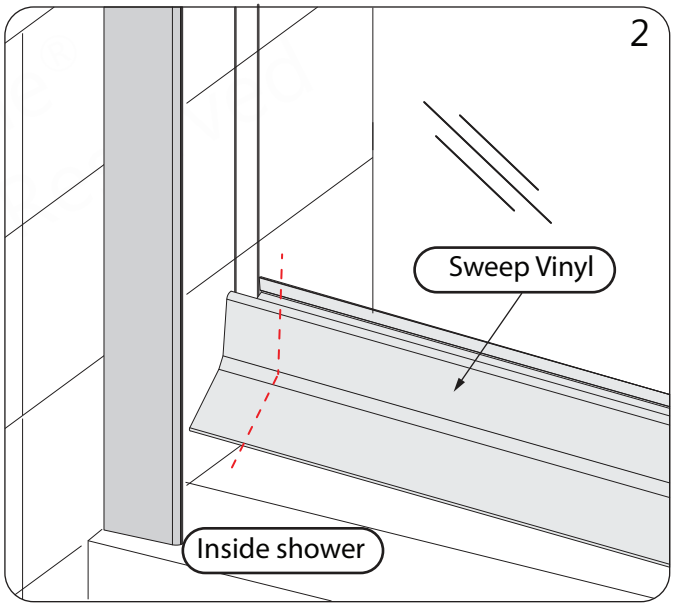

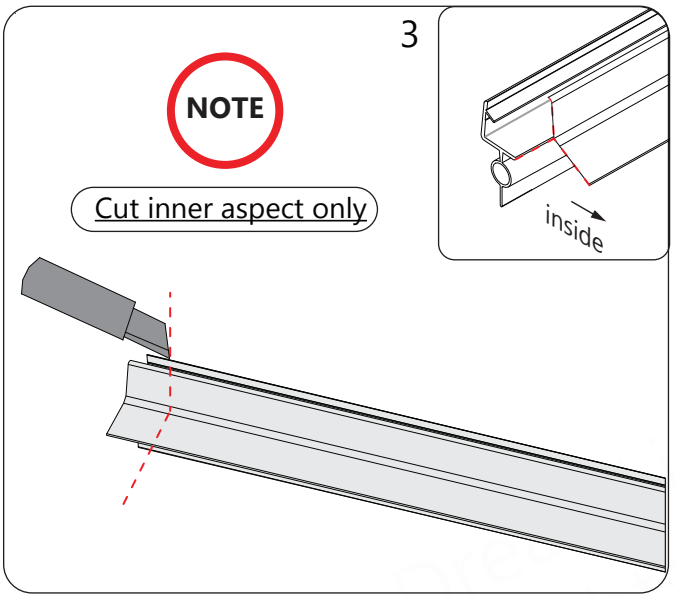

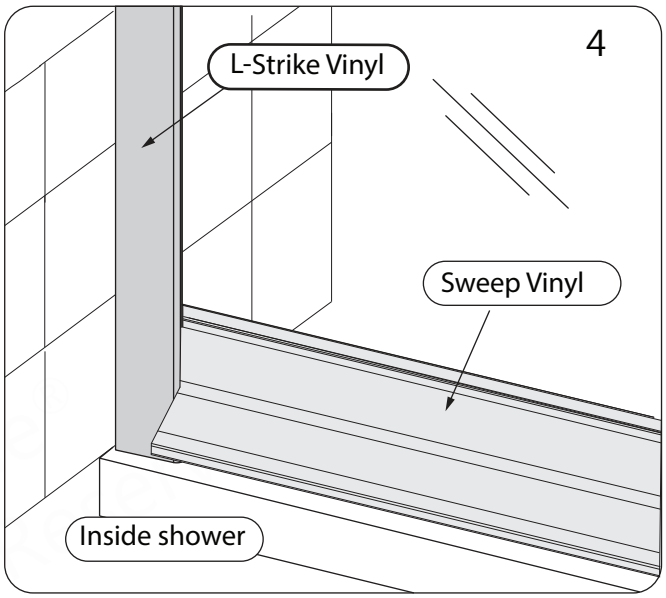

©2026 DreamLine® All Rights Reserved

Product Maintenance

BASES and BACKWALLS: To ensure long lasting life for your acrylic back walls: wipe them off after each use with a soft cloth. To clean the acrylic back walls use non-abrasive sprays or cream based cleaners. Avoid the use of aerosol spray cleaners. Never use abrasive cleansers, metal brushes or scrapers that could permanently scratch or dull the surface.

GLASS: To ensure long lasting life for your glass shower products: wipe them off after each use with a soft cloth. Rinse and wipe off the glass using either a soft cloth or a squeegee to prevent soap buildup and water spots (Hard water can etch the surface of the glass over time if left to dry). To prevent scratching the surface: never use abrasive cleaners or cleaning products that contain scouring agents. Never use bristle brushes or abrasive sponges that may scratch the surface of the glass.

HARDWARE: To ensure a long lasting finish: wipe off all metal parts after each use with a soft cloth. Do not use abrasive cleaners or cleaning products containing ammonia, bleach or acid. If accidentally used, rinse the surface as soon as possible to prevent damage to the finish (peeling or corrosion). After cleaning the polished finishes, rinse thoroughly and wipe dry with a soft clean-cloth. Clean stainless steel surfaces at least once a week. When applying stainless steel cleaner or polish to stainless steel hardware, work with the grain (not across the grain). Never use an abrasive sponge or cloth, steel wool or wired brush as these may permanently scratch the surfaces.

NOTE **To maximize the life of your door, it is important to regularly inspect the glass and other hardware for misalignment, proper attachment, and/or damage. Contact DreamLine® with any questions or concerns.**

UNIDOOR Series (STYLE A) / UNIDOOR EDGE Single Door Maintenance Checklist

☐ Check that the unit is stable, operates smoothly and that the installation is secure

☐ Confirm that all screws are tight

☐ Confirm that all vinyl seals are intact (replace if missing or damaged to prevent water leakage)

☐ Inspect exposed and concealed glass edges for damage

- ☐ **Damaged Glass Must be Replaced**

©2026 DreamLine® All Rights Reserved

Troubleshooting

Problem/Symptom	Suggested Solution
Missing Parts	•Check all shipping/packaging material for missing parts/components. •If not found, contact DreamLine Customer Support [1-866-731-2244] to order factory part replacement.
Door Glass (#01) feels loose in the hinges; the hinges are pulling out of the wall; Door glass is not level across the top; sweep vinyl drags; no clearance between the door glass and the strike vinyl	•Remove the vinyl seals (including the sweep vinyl) from the **Door Glass (#01)** and place two 5/8" shims under the door glass. Remove the backplates from the **Hinge Assemblies (#05)**. Remove the glass and set on a protective surface. Remove and clean the clear Hinge Assembly gaskets and the area around the hinge cutouts. Using an assistant, re-install glass using the 5/8" shims. Reinstall backplates and **fully tighten** the hinge bolts by hand. It is normal to hear the gaskets compress onto the glass. (Page 14). Reinstall the vinyl seals. •Confirm the hinge screws were installed into wood reinforcement in the wall during installation and are tight to the walls; if not, removal and reinstallation may be necessary. (Page 3)
Door Glass (#01) does not create a tight seal with the L-strike vinyl while in the closed position	•Use a level to confirm the **Door Glass (#01)** is plumb; Confirm the **L-Strike Vinyl (#08)** is installed in the correct location so the door glass creates a tight seal with the vinyl when in the closed position. Be sure the **Bottom Sweep Vinyl Seal (#07)** is correctly notched to fit around the **L-Strike Vinyl (#08)** [Page 35] •The **Door Glass (#01)** may need adjustment to reset the **Hinge Assemblies (#05)** for overclose to achieve a seal, refer to the Hinge Assembly Adjustment Procedure [Page 21]
Water Leakage: **Hinge Assembly (#05)**	•Confirm the vinyls are notched as instructed and tightly secured to the **Door Glass (#01)**. [Pages 19; 20] •Direct the water flow away from the area
Water Leakage: **Bottom Sweep Vinyl Seal (#07)**	•Confirm the vinyl is tightly secured to the bottom of the **Door Glass (#01)**. Also, confirm the distance between the bottom of the Door Glass and threshold is 5/8" (16mm). Confirm the **Bottom Sweep Vinyl Seal (#07)** is correctly notched around the **L-Strike Vinyl (#08)** •Direct the water flow away from the area
Handle (#02) rattles during operation	•Confirm the vinyl gaskets are present and the handles are tightly secured to the glass. If applicable, hand tighten the set screws with an allen key. [Page 17]



Prior to contacting DreamLine® Customer Service, please have the following information readily available:

- Purchase Order Information
  - Name, PO Number, Dealer/Vendor Name, etc.
- SKU/Model Number (see Pages 26-27)
- Factory Part Information (see Pages 26-27)

©2026 DreamLine® All Rights Reserved

Factory Parts Information

UNIDOOR -(PLUS/-X/-LS) (STYLE A) - HARDWARE		FACTORY PARTS INFORMATION	
ITEM #	**FACTORY PART NUMBER**	**ITEM DESCRIPTION**	**QTY**
02	0722**1**041 / 0722**4**041 / 0722**6**041 / 0722**9**041	Single-Sided 8in. Tubular Handle Assembly with Knob for 10mm (3/8in) Glass*	1 pc
02	0722**1**086 / 0722**4**086 / 0722**6**086 / 0722**9**086	Back-to-Back 8in. Tubular Handle Assembly for 10mm (3/8in) Glass**	1 pc
04	092130	ST5.5 x 70 Countersunk Screw	11 pcs
05	0741**1**027 / 0741**4**027 / 0741**6**027 / 0741**9**027	Paris 85-Degree Glass-to-Wall Adj Hinge Assembly for 10mm (3/8in) Glass	2 pcs
05a	0755**1**097 / 0755**4**097 / 0755**6**097 / 0755**9**097	Decorative Cap for M6 Hex bolt	8 pcs
06	063011100-1829	Hinge Side Vinyl Seal for 10mm (3/8in) Glass	1 pc
08	063009000-1829	L-Strike Vinyl w/VHB Tape	1 pc
	BOLD digit indicates finish:	*standard Handle for Unidoor, Unidoor Plus and Unidsoor-X	
	1 = Chrome; **4** = Brushed Nickel;	**standard Handle for Unidoor-LS and Unidoor Edge	
	6 = Oil Rubbed Bronze; **9** = Satin Black		

UNIDOOR - (PLUS/-X/-LS) (STYLE A) - GLASS		FACTORY PARTS INFORMATION	
ITEM #	**FACTORY PART NUMBER**	**ITEM DESCRIPTION**	**QTY**
01	010137001	23-in Door Glass	1 pc
07	063015100-0569	Bottom Sweep Vinyl for 10mm (3/8in) Glass (for 23-in Door Glass)	1 pc
01	010137002	24-in Door Glass	1 pc
07	063015100-0595	Bottom Sweep Vinyl for 10mm (3/8in) Glass (for 24-in Door Glass)	1 pc
01	010137003	25-in Door Glass	1 pc
07	063015100-0620	Bottom Sweep Vinyl for 10mm (3/8in) Glass (for 25-in Door Glass)	1 pc
01	010137004	26-in Door Glass	1 pc
07	063015100-0645	Bottom Sweep Vinyl for 10mm (3/8in) Glass (for 26-in Door Glass)	1 pc
01	010137005	27-in Door Glass	1 pc
07	063015100-0670	Bottom Sweep Vinyl for 10mm (3/8in) Glass (for 27-in Door Glass)	1 pc
01	010137006	28-in Door Glass	1 pc
07	063015100-0695	Bottom Sweep Vinyl for 10mm (3/8in) Glass (for 28-in Door Glass)	1 pc
01	010137007	29-in Door Glass	1 pc
07	063015100-0720	Bottom Sweep Vinyl for 10mm (3/8in) Glass (for 29-in Door Glass)	1 pc
01	010137008	30-in Door Glass	1 pc
07	063015100-0747	Bottom Sweep Vinyl for 10mm (3/8in) Glass (for 30-in Door Glass)	1 pc

Model #s:
SHDR-20237210F-##; SHDR-20247210F-##; SHDR-20257210F-##; SHDR-20267210F-##;
SHDR-20277210F-##; SHDR-20287210F-##; SHDR-20297210F-##; SHDR-20307210F-##

Contact **Support@DreamLine.com** for Part replacement, installation assistance or additional information.
Complete **Warranty** information is available on **DreamLine.com**.

©2026 DreamLine® All Rights Reserved

Factory Parts Information

UNIDOOR EDGE (SHDR-202472E-09)		FACTORY PARTS INFORMATION	
ITEM #	**FACTORY PART NUMBER**	**ITEM DESCRIPTION**	**QTY**
01	010013085	Door Glass	1 pc
02	0722**9**086	Back-to-Back 8in. Tubular Handle Assembly for 10mm (3/8in) Glass	1 pc
04	092131	ST5.5 x 70 Countersunk Screw (Satin Black)	11 pcs
05	0741**9**027	Paris 85-Degree Glass-to-Wall Adj Hinge Assembly for 10mm (3/8in) Glass	2 pcs
05a	0755**9**097	Decorative Cap for M6 Hex bolt	8 pcs
06	063011102-1829	Hinge Side Vinyl Seal for 10mm (3/8in) Glass (Satin Black)	1 pc
07	063009000-1829	L-Strike Vinyl w/VHB Tape (Clear)	1 pc
11	063015102-0595	Bottom Sweep Vinyl for 10mm (3/8in) Glass (for 24-in Door) (Satin Black)	1 pc
19**	063010102-1829	180˚ Strike Vinyl **item 19 ships with the UNIDOOR EDGE door glass and is not used for single door installation	—

**item 19 ships with the UNIDOOR EDGE door glass and is not used for single door installation

© DreamLine®
All rights Reserved

Contact **Support@DreamLine.com** for Part replacement, installation assistance or additional information.
Complete **Warranty** information is available on **DreamLine.com**.

©2026 DreamLine® All Rights Reserved

Factory Parts Information

UNIDOOR TOULON		FACTORY PARTS INFORMATION	
ITEM #	**FACTORY PART NUMBER**	**ITEM DESCRIPTION**	**QTY**
01a	010137126	Door Glass 28" Model	1 pc
01b	010137188	Door Glass 30" Model	1 pc
01c	010137144	Door Glass 24" Model	1 pc
02	07229041	Square Handle with Knob Handle Assembly	1 pc
04	092131	ST5.5x70mm Countersunk Screw	11 pcs
05	07419027	Paris 85 Degree Glass-to-Wall Adj Hinge Assembly	2 pcs
06	063011102-1829	Hinge Side Vinyl Seal	1 pc
07	063009000-1829	L-Strike Vinyl w/VHB Tape for 10mm (3/8in) Glass	1 pc
11b	063015102-0747	Bottom Sweep Vinyl Seal	1 pc
11a	063015102-0700	Bottom Sweep Vinyl Seal	1 pc
11c	063015102-0595	Bottom Sweep Vinyl Seal	1 pc
19	063010102-1829	180 degree Inline Strike Vinyl for 10mm (3/8in) Glass	1 pc

**item 19 ships with the UNIDOOR TOULON door glass and is not used for single door installation

© DreamLine® All rights Reserved

Contact **Support@DreamLine.com** for Part replacement, installation assistance or additional information.
Complete **Warranty** information is available on **DreamLine.com**.

©2026 DreamLine® All Rights Reserved

NOTES:

© DreamLine®
All Rights Reserved

© DreamLine®
All Rights Reserved

©2026 DreamLine® All Rights Reserved

© DreamLine®
All Rights Reserved

DREAMLINE®
dream in style

© DreamLine®
All Rights Reserved

TEL: 866-731-2244
FAX: 866-857-3638
DREAMLINE.COM

For more information on DreamLine® Shower Doors and Enclosures please visit **DreamLine.com**

©2026 DreamLine® All Rights Reserved

©2017 DreamLine. All Rights Reserved

DREAMLINE®
THE ULTIMATE SHOWER DOOR

UNIDOOR (STYLE G)

SHOWER DOOR GLASS PANEL INSTALLATION INSTRUCTIONS

IMPORTANT

DreamLine® reserves the right to alter, modify or redesign products at any time without prior notice. For the latest up-to-date technical drawings, manuals, warranty information or additional details please refer to your model's web page on **DreamLine.com**

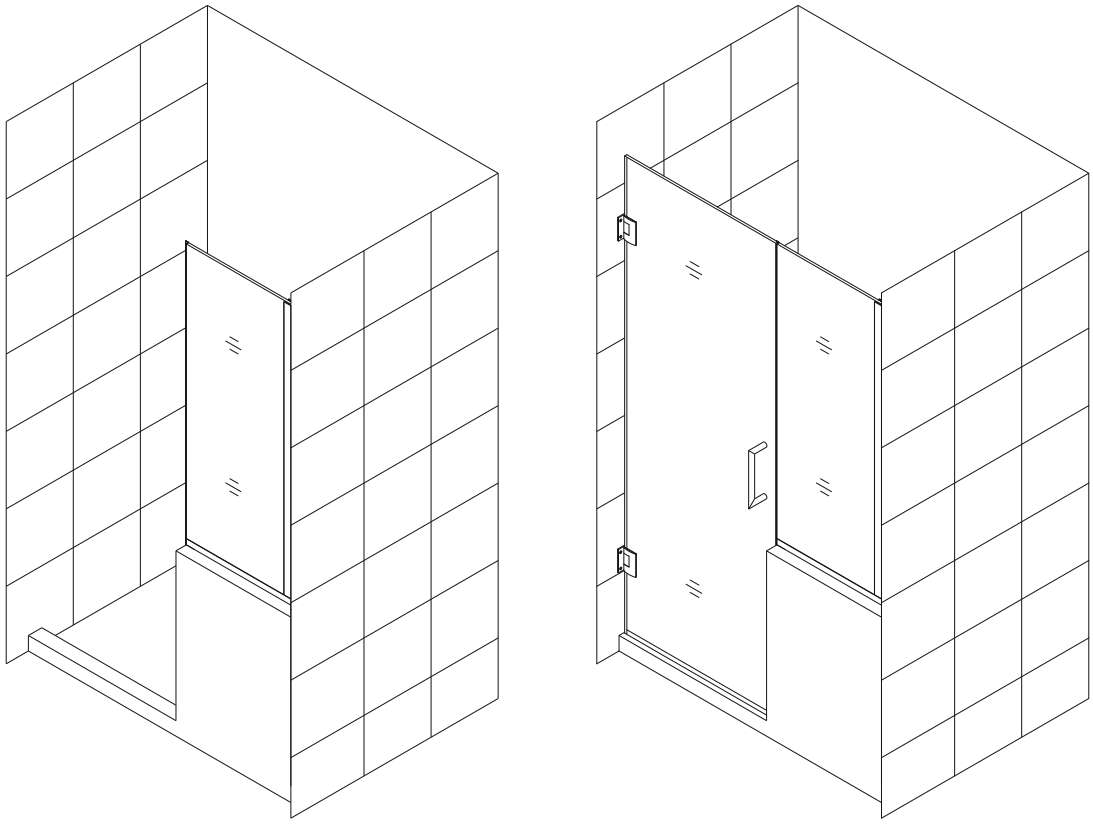

Style G

Right side panel installation shown

Please read these instructions carefully before installing. If you have any questions regarding installation, please contact our technical support specialists Monday through Friday 8AM – 7PM and Saturday 9AM-5PM EST at Phone: 1-866-731-2244, Fax: 1-866-857-3638 or e-mail our technical support group at Support@DreamLine.com

For more information about DreamLine® products please visit DreamLine.com

©2017 DreamLine. All Rights Reserved

Model #s

SHDR-24232434-##
SHDR-24232436-##
SHDR-24233634-##
SHDR-24233636-##
SHDR-24242434-##
SHDR-24242436-##
SHDR-24243634-##
SHDR-24243636-##
SHDR-24273034-##
SHDR-24273036-##
SHDR-24273634-##
SHDR-24273636-##
SHDR-24283034-##
SHDR-24283036-##
SHDR-24283634-##
SHDR-24283636-##
SHDR-24293034-##
SHDR-24293036-##
SHDR-24293634-##
SHDR-24293636-##
SHDR-24303034-##
SHDR-24303036-##
SHDR-24303634-##
SHDR-24303636-##

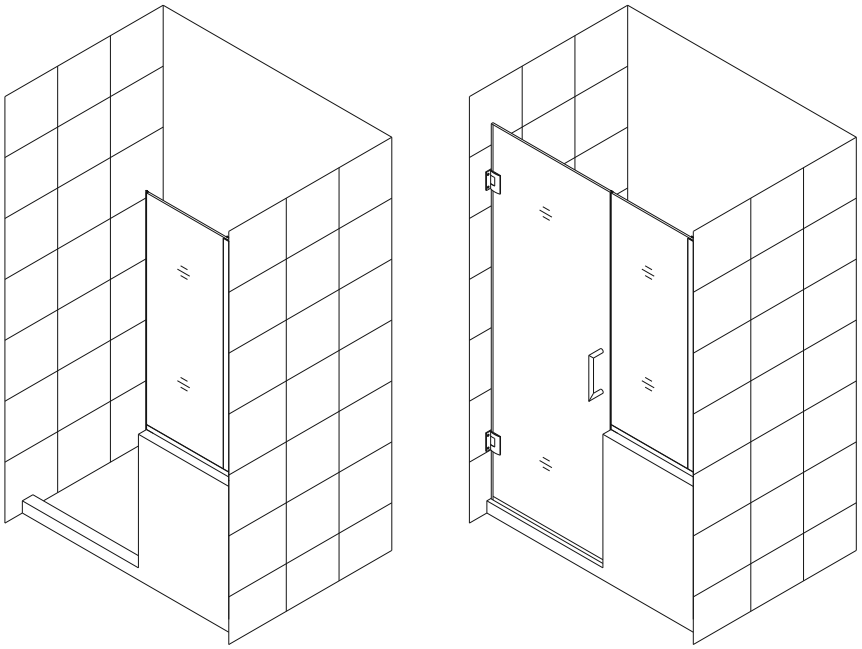

Style G

= finish 01 – Chrome 04 – Brushed Nickel 06 – Oil Rubbed Bronze 09 – Satin Black

©2017 DreamLine. All Rights Reserved

ADDITIONAL MODEL CONFIGURATIONS for UNIDOOR- X GLASS-TO-GLASS HINGE DOORS

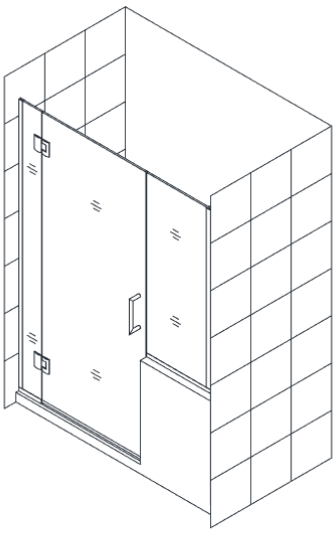

Style M2 6

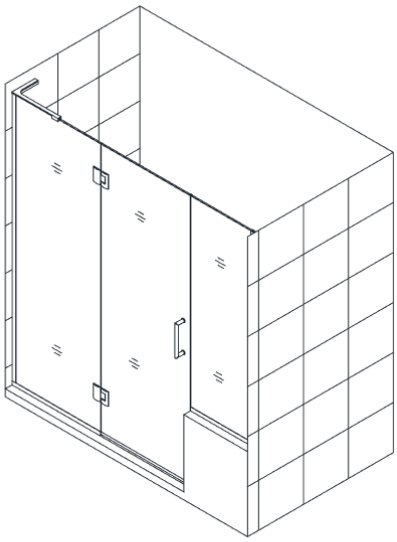

Style M2 24

Model #s

D3242436R-##
D3242436L
D3242434R
D3242434L
D3232436R
D3232436L
D3232434R
D3232434L
D1303636
D1303634
D1303036
D1303034
D1302436
D1302434
D1293636
D1293634
D1293036
D1293034
D1292436
D1292434
D1283636
D1283634
D1283036
D1283034
D1282436
D1282434
D1273636
D1273634
D1273036
D1273034
D1272436
D1272434
D1263636
D1263634
D1263036
D1263034
D1262436
D1262434
D1253636
D1253634
D1253036
D1253034
D1252436
D1252434
D1243636
D1243634
D1243036
D1243034
D1242436
D1242434
D1233636
D1233634
D1233036
D1233034
D1232436
D1232434

= finish 01 – Chrome 04 – Brushed Nickel 06 – Oil Rubbed Bronze 09 – Satin Black

©2017 DreamLine. All Rights Reserved

Preparation

1. Prior to installation, examine all boxes and packages for shipping damage and compare the piece count with your packing slip. After opening all boxes and packages read this introduction carefully. Check that all of the needed parts are included in the package by checking off the components on the "Detailed Diagram of Shower Door Components". If the unit has been damaged, has a finishing defect, or has missing parts, please contact our customer support department within **3 business days** of the delivery date. Please note that **DreamLine® will not replace any damaged products or missing parts free of charge after 3 business days or if the product has been installed.** Feel free to contact DreamLine® if you have any questions and please provide an order number, job name or other proof of purchase to help us identify your original order.

2. If this unit is going to be installed in a new construction, install all of the required plumbing and drainage before installing the shower. **Use a competent and licensed (if required by local code) plumber for all plumbing installation.**

3. **Please note that you should consult your local building codes with questions about installation compliance standards. Building and plumbing codes may vary by location, and DreamLine® is not responsible for code compliance standards for your project and will not accept any returns**.

4. Please make sure that prior to beginning the installation, the surfaces are leveled and solid and will be able to support the total weight of the unit. Also make sure the walls are at right angles. Irregular installation surface level, radius corners or improper angle of side walls will result in serious problems for your installation. Please note that some adjustments and drilling may be necessary during the installation process.

5. Please protect all primary surfaces of the product during installation. Never set your glass down directly onto a tile floor. Leave corner protectors in place until necessary to remove them. Always use a piece of wood or cardboard to protect the bottom edge and corners of the glass prior to and during installation.

6. This unit must be installed upon a finished threshold and against finished walls.

7. This model requires that you drill into the threshold for proper installation.

8. This model has **1/2" of adjustment within the u-channel** for out-of-plumb wall conditions and overall width within the model size. Confirm the finished opening conditions before proceeding with the installation.

9. This model requires a minimum 5/8" of flat threshold space for installation.

10. **Professional installation is recommended** for this heavy glass frameless shower door.

NOTE: This door is reversible for right or left side panel installation. The right side panel installation is shown as an example throughout this manual. For the left side panel installation, simply begin on the opposite wall and reverse the orientation of the steps shown.

©2017 DreamLine. All Rights Reserved

Tools Required

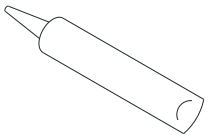
Caulk

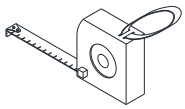
Tape Measure


Pencil

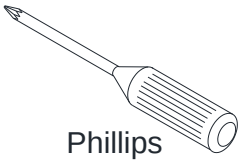
Phillips Screwdriver

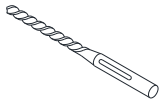
Drill bit (Ø=5/16")


Drill bit (Ø=1/8")


Level


Caulk Gun


Electric Drill


Hammer

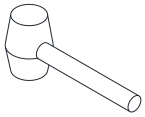
Mallet


Wood

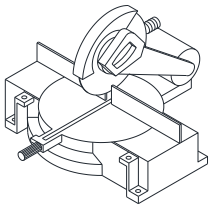
Miter saw

©2017 DreamLine. All Rights Reserved

Detailed Diagram of Glass Panel Components

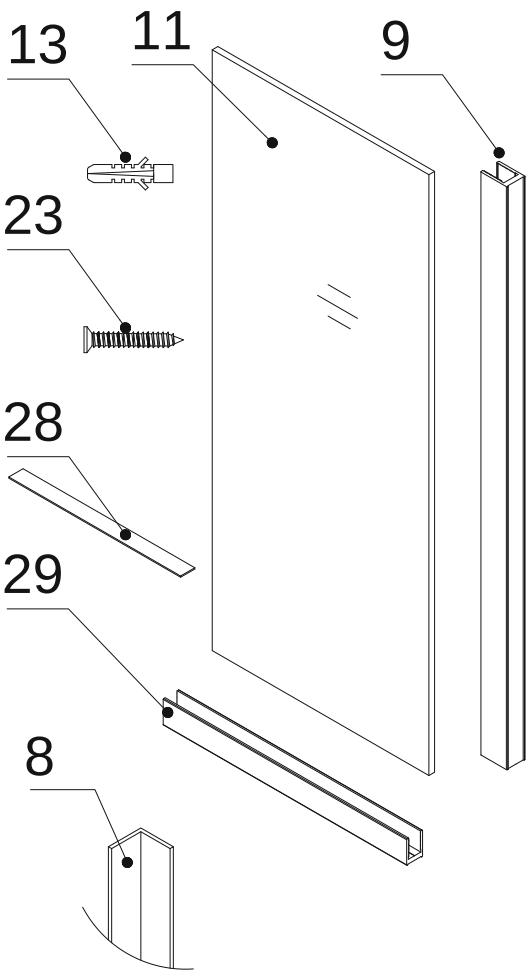

The glass surface with the **ClearMax™** label must be installed to face inside of the shower

Packing List

08	L-shaped strip *	1pc	23	Countersunk screw ST4.2x40	14pcs
09	U-channel 1 (76”, wall profile)	1pc	28	Adjustment spacer	6pcs
11	Stationary glass	1pc	29	U-channel 2 (44”, bottom profile)	1pc
13	Ø5/16” Wall anchor	14pcs			

NOTE: Unpack your unit carefully and inspect it. Identify all parts using the detailed diagram and packing list in this manual as a reference. Before discarding the carton, check for small hardware bags that may have fallen to the bottom of the box. If any parts are damaged or missing, please contact DreamLine® for replacement. The shipping boxes may contain extra parts not used in your model configuration.

*** ATTENTION: The L-shaped strip (08) can be found in the glass door packaging and is included in the above Packing List as a reference only. The L-shaped strip (08) installation is shown in step #12 of this manual. NOTE:** Retain these installation instructions for future reference.

©2017 DreamLine. All Rights Reserved

Style "G": 6"-34" In-Line Half Wall Stationary Panel Installation

NOTE: The Unidoor shower door needs to be installed prior to proceeding with the following Stationary Glass installation instructions. Please see the Single Shower Door installation manual included in the door packaging for complete shower door installation instructions. Before you begin the installation, please recheck your shower opening size. Specific size information can be found on our website at DreamLine.com

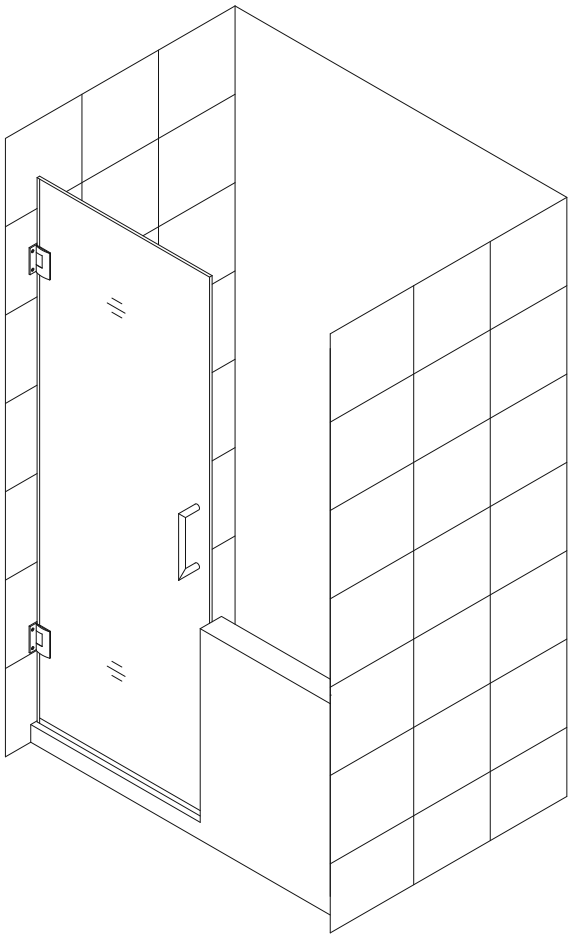

NOTE: The Unidoor hinge is factory set to overclose 8°. The following procedure is recommended to ensure proper alignment of the panel glass and door glass.

1. Align the **Door** so that it is perpendicular to the wall and parallel to the threshold. Measure across the bottom span of the **Door** and threshold on the outside of shower and determine an equal value.
   Use a straight edge as guide to mark a line on the half wall ledge on the handle side for future reference.

   See Fig. 1 for details.

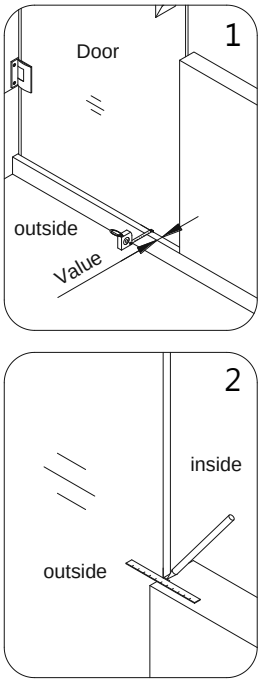

Fig. 1

©2017 DreamLine. All Rights Reserved

NOTE: Use parts from "Detailed Diagram of Glass Panel Components" for the Stationary Glass assembly and installation.

2. Measure the actual width and height of your **Stationary glass (11)**.

   See Fig. 2 for details.

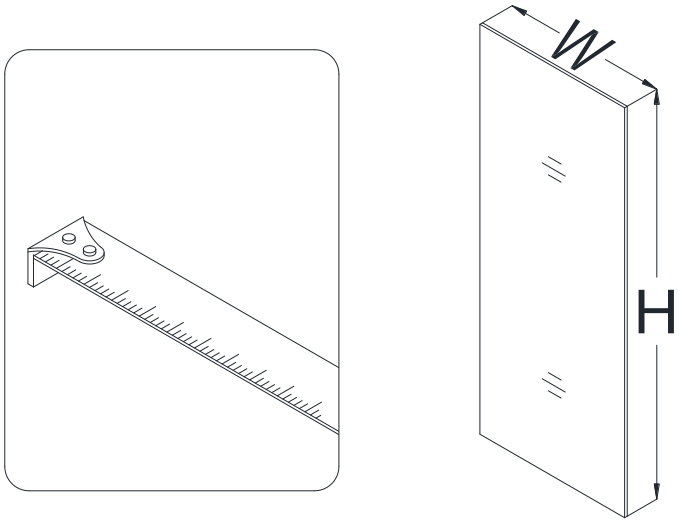

Fig. 2

3. **NOTE: You will be doing straight cuts for this stationary panel installation.**

   ***It may be necessary to remove any burrs from the cut end of the U-channels with a metal file before placing the U-channel onto the glass.**

   a) Use a miter saw to rough cut the **U-channel 2 (44", bottom profile)** to the actual width of the glass (+) 1".

   b) Use a miter saw to rough cut the **U-Channel 1 (76", wall profile) (09)** to the actual height of the glass (+) 1".

   See Fig. 3 & 4 for details.

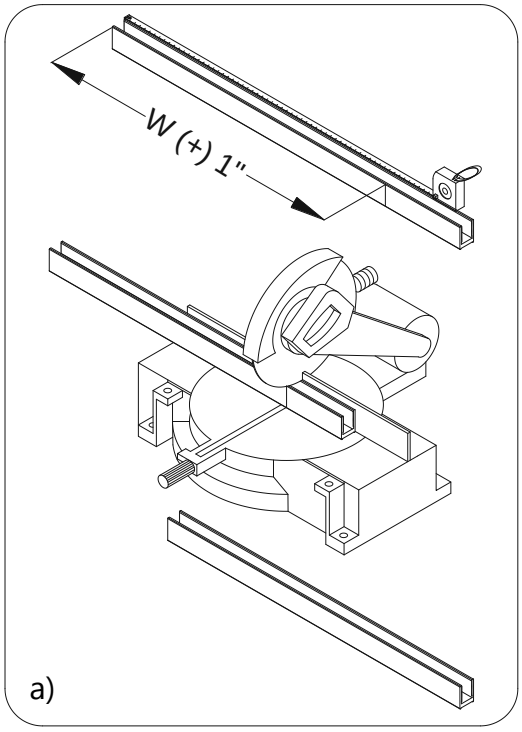

Fig. 3

©2017 DreamLine. All Rights Reserved

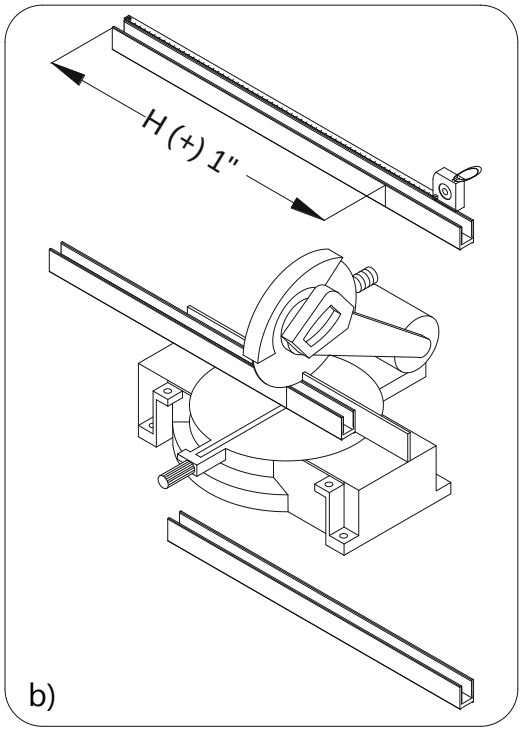

Fig. 4

4. Slip the cut **U-channel 2 (bottom profile) (29)** and **U-channel 1 (wall profile) (09)** onto the **Stationary glass (11)** in the shown locations.
   With the door open, place the **Stationary glass** on the half wall ledge opposite of door. Adjust the **Stationary glass** and **U-channel 1 (wall profile)** against the wall to compensate for any out of plumb conditions ensuring that the **Stationary glass** is level vertically and **U-channel 1** is flush with the wall.

   <u>NOTE</u>: The exposed vertical glass edge must be flush with the finished half wall's door side face.

   Mark the **U-channel 2 (bottom profile)** end opposite of the wall at the exposed vertical glass edge.
   Remove the **U-channel 2 (bottom profile).** Leave the **U-channel 1 (wall profile)** on the **Stationary glass.** Set the **Stationary glass** aside.
   Cut the **U-channel 2 (bottom profile)** at the mark.
   Slip the **U-channel 2 (bottom profile)** back onto the **Stationary glass.**

   See Fig. 5 for details.

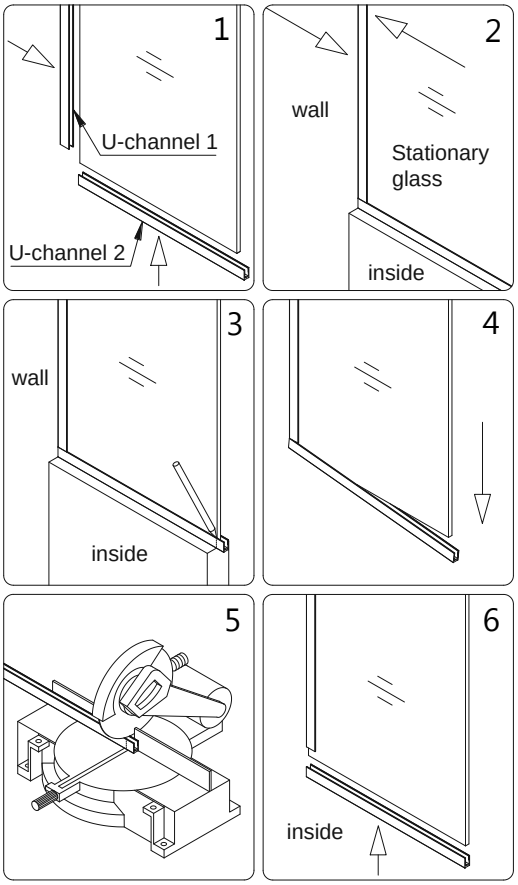

Fig. 5

©2017 DreamLine. All Rights Reserved

5. While securely holding the **Stationary glass (11),** close the **Glass Door** and align the **Stationary glass** to it. Use the door mark on the ledge as a reference to ensure that the **Door** is perpendicular to the wall.

   NOTE: The top of the Stationary glass must be leveled with the Glass door. By traversing across the top of both the Stationary glass and door, height differences can be measured. The Adjustment spacers (28) are provided to compensate for such differences by inserting them into the U-Channel 2 (bottom profile) (29). Please make note of the spacer size that is needed for your situation.

   Ensure that the **Stationary glass** is level vertically and precisely in line with **Door**. The **U-channel 1 (wall profile) (09)** will remain flush against the wall. Outline the position of the **Stationary glass** along the inside edge of both **U-channels** on the wall and half wall ledge.
   Mark the **U-channel 1 (wall profile) (09)** at the top horizontal glass edge. The height of this mark will change if spacers are needed.

   See Fig. 6 & 7 for details.

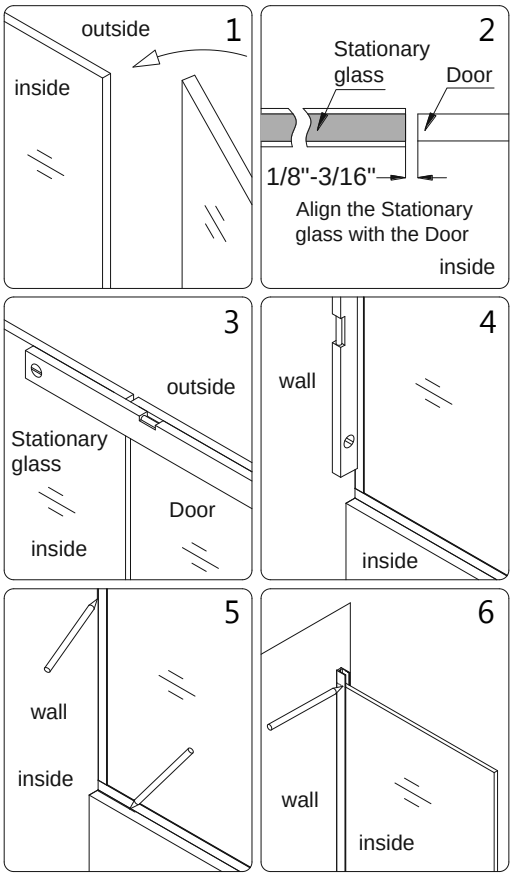

Fig. 6

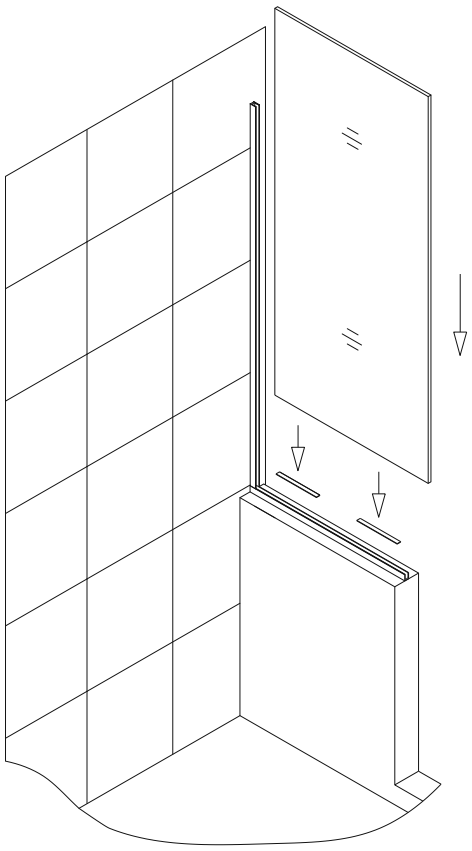

Fig. 7

©2017 DreamLine. All Rights Reserved

6. Remove the **U-Channel 2 (bottom profile) (29)** and **U-channel 1 (wall profile) (09)** from the **Stationary glass (11)**. Carefully set the **Stationary glass** aside.

   See Fig. 8 for details.

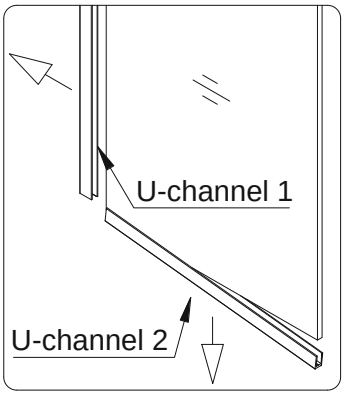

Fig. 8

7. Place the cut **U-Channel 2 (bottom profile) (29)** onto the ledge in line with the inside mark.

   Mark the drill holes on the ledge through the predrilled holes in the **U-Channel 2** and drill the holes using **Ø5/16" drill bit.**

   Insert the **Ø5/16" Wall anchors (13)**.

   Apply waterproof silicone along the bottom surface and around the holes of the **U-Channel 2** and fasten it to the ledge with the **Countersunk screws ST4.2×40 (23)**.

   NOTE: The surface needs to be clean and free of debris before applying silicone.

   See Fig. 9 & 10 for details.

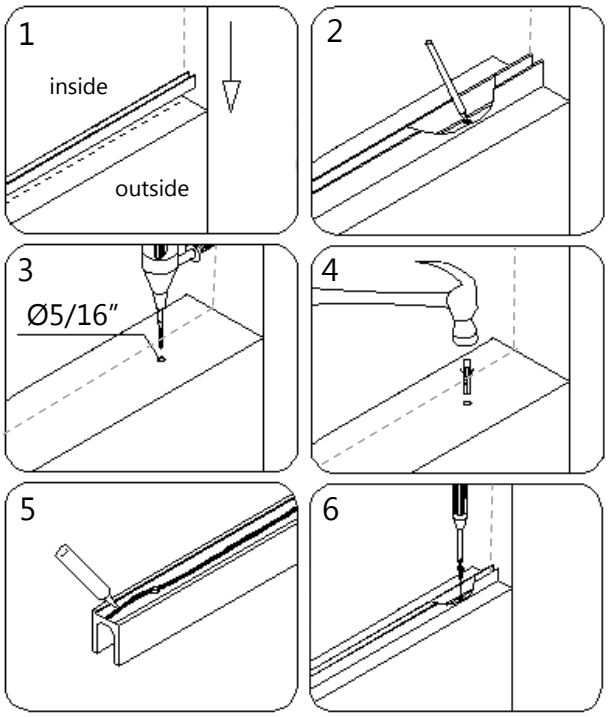

Fig. 9

©2017 DreamLine. All Rights Reserved

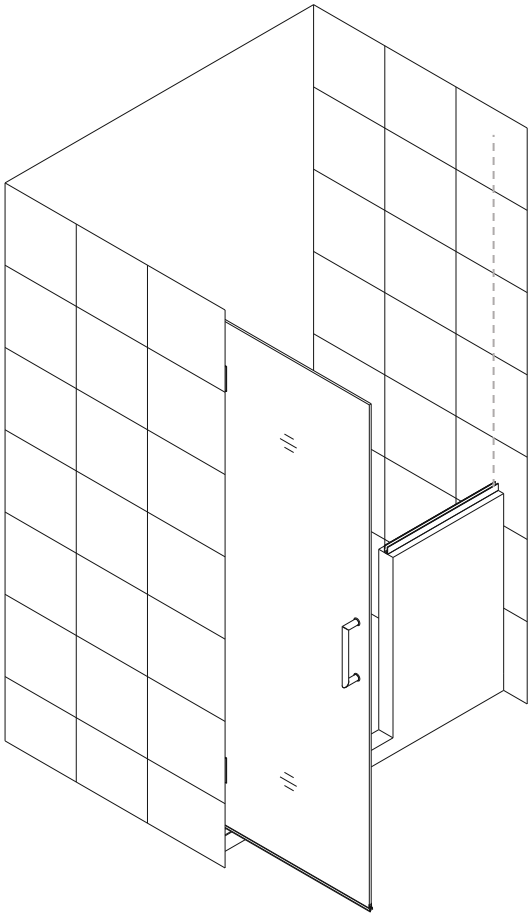

Fig. 10

8. Cut the **U-channel 1 (wall profile) (09)** at the top mark that was made in step #5.

   Place the **U-Channel 1 (wall profile)** on the **U-Channel 2 (bottom profile) (29)** and align vertically with the inside wall mark.

   Mark the drill holes on the wall through the predrilled holes in the **U-Channel 1**.

   Now drill holes in the wall using **Ø5/16 drill bit** and insert the **Ø5/16" Wall anchors (13)**.

   See Fig. 11 for details.

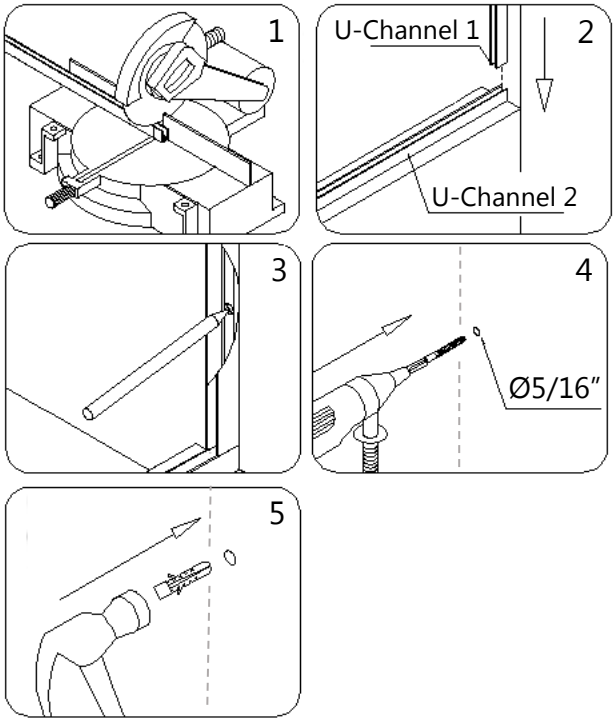

Fig. 11

©2017 DreamLine. All Rights Reserved

9. Apply waterproof silicone along the bottom surface and around the holes of the **U-Channel 1 (wall profile) (09)**. Fasten the **U-Channel 1** to the wall with the **Countersunk screw ST4.2x40 (23)**.

   Insert the provided **Adjustment Spacers (28)** into **U-Channel 2 (bottom profile) (29)** for minor adjustments if necessary.

   Apply Waterproof silicone into the groove of both **U-Channels**.

   NOTE: The surface needs to be clean and free of debris before applying silicone.

   See Fig. 12 & 13 for details

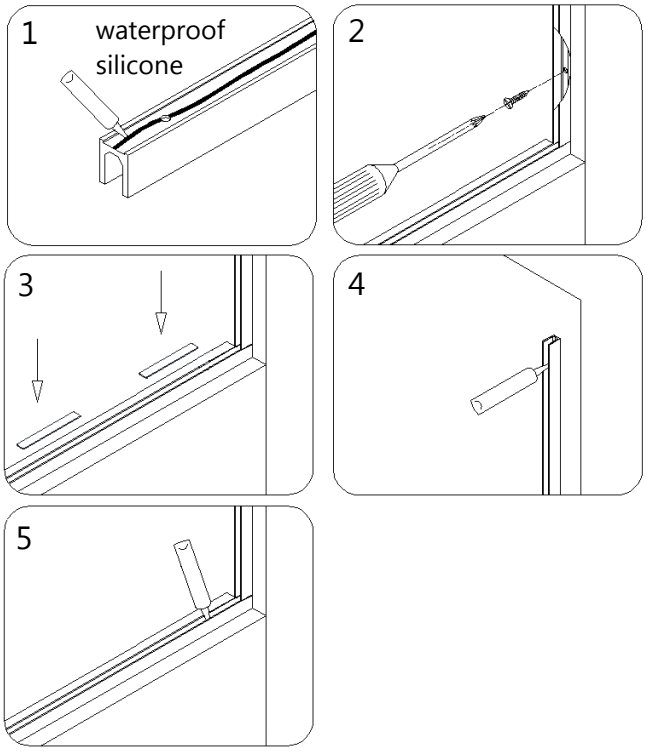

Fig. 12

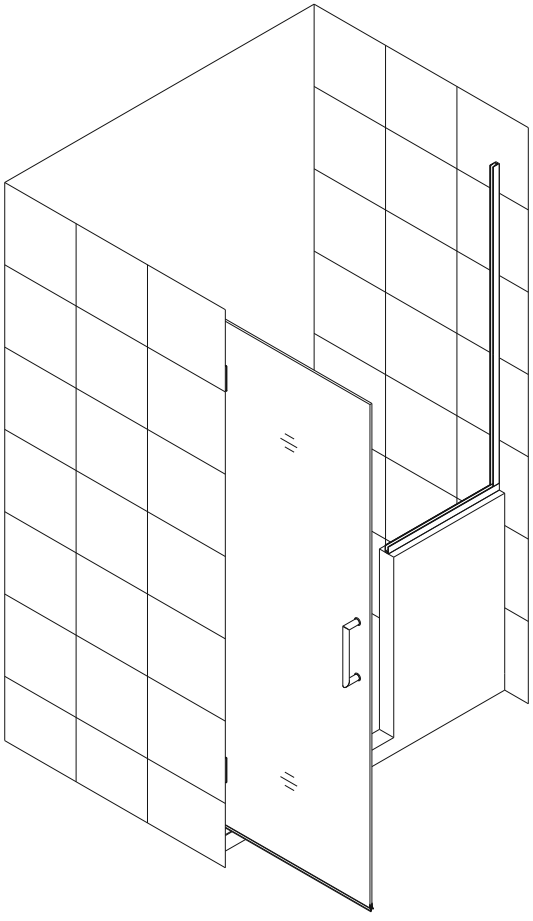

Fig. 13

©2017 DreamLine. All Rights Reserved

10. Slide the **Stationary glass (11)** into the groove of both **U-Channels**.

    Apply a bead of silicone on the open end of the **U-Channel**, and its connection. Ensure that the silicone applied to the open end is flat and smooth so that it will not interfere with the installation of the **L-shaped strip*(08)** in step #12.

NOTE:

If you have difficulty sliding the **Stationary glass** into the **U-Channels**, you can slightly tap on the **Stationary glass** with a rubber mallet and a piece of wood.

See fig. 14 & 15 for details

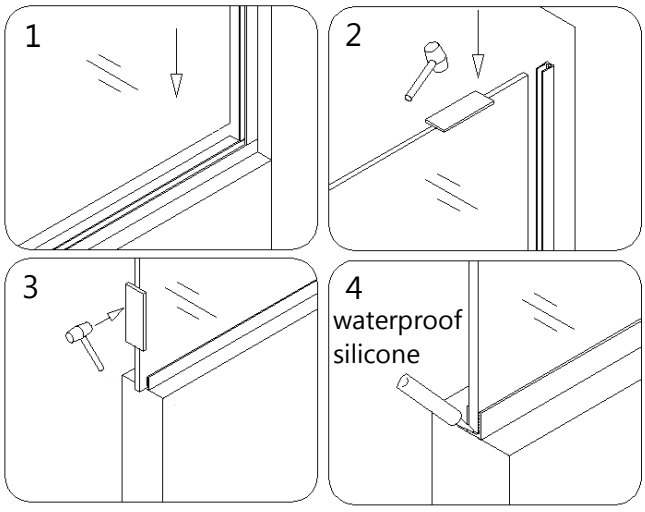

Fig. 14

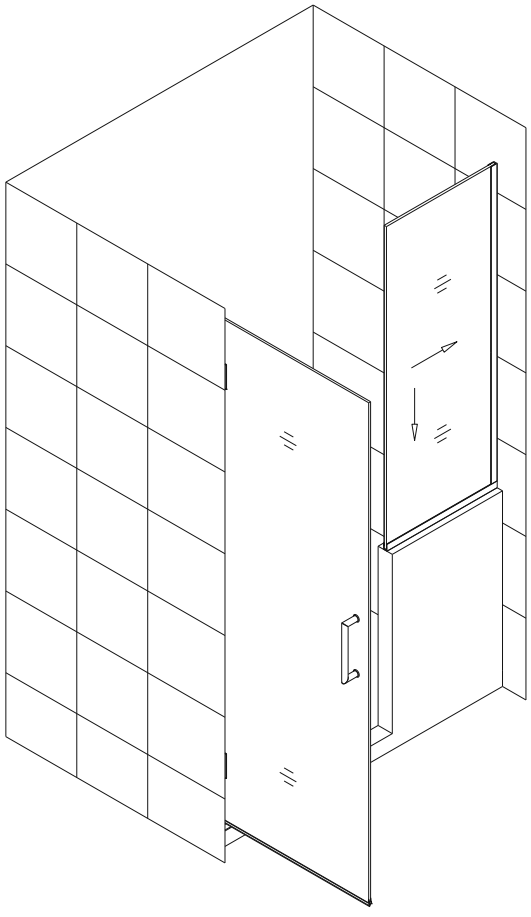

Fig. 15

©2017 DreamLine. All Rights Reserved

11. Apply a good quality mildew resistant waterproof silicone along the connection of both **U-Channels** to the wall and ledge on the inside of shower.

    See Fig. 16 for details.

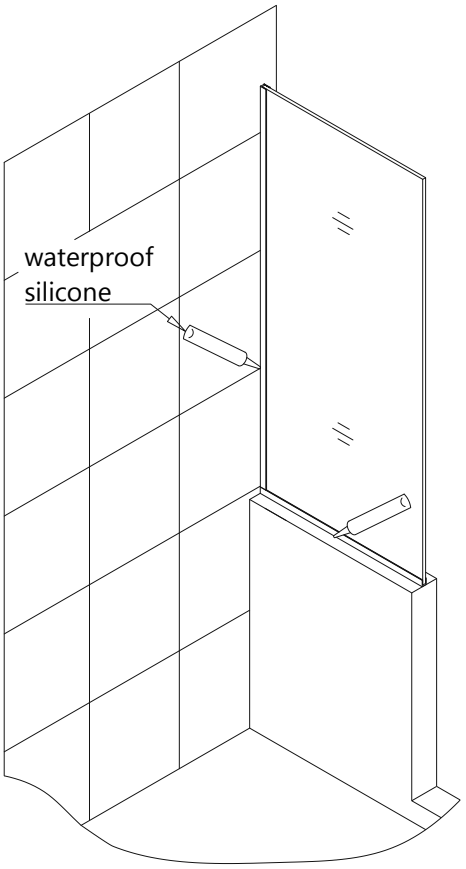

Fig. 16

ATTENTION:
Prior to the next step, please be sure the part of the wall and glass edge for installation of the L-shaped strip*(08) is clean, dry and free from soap, oil and any construction debris.

12. Align the **L-shaped strip*(08)** on the vertical edge of the **Stationary glass (11)** so that the door glass rests flush against it in the closed position. Ensure that the bottom of the **L-Shaped strip** makes contact with the threshold rather than aligning the top of the **strip** to the top of the **Stationary glass**. Note the position on the wall then gently remove the plastic tape from the adhesive side of the **L-shaped strip**. Firmly press it onto the vertical edge of the **Stationary glass** and to the surface of the half wall.

    See Fig. 17 for details.

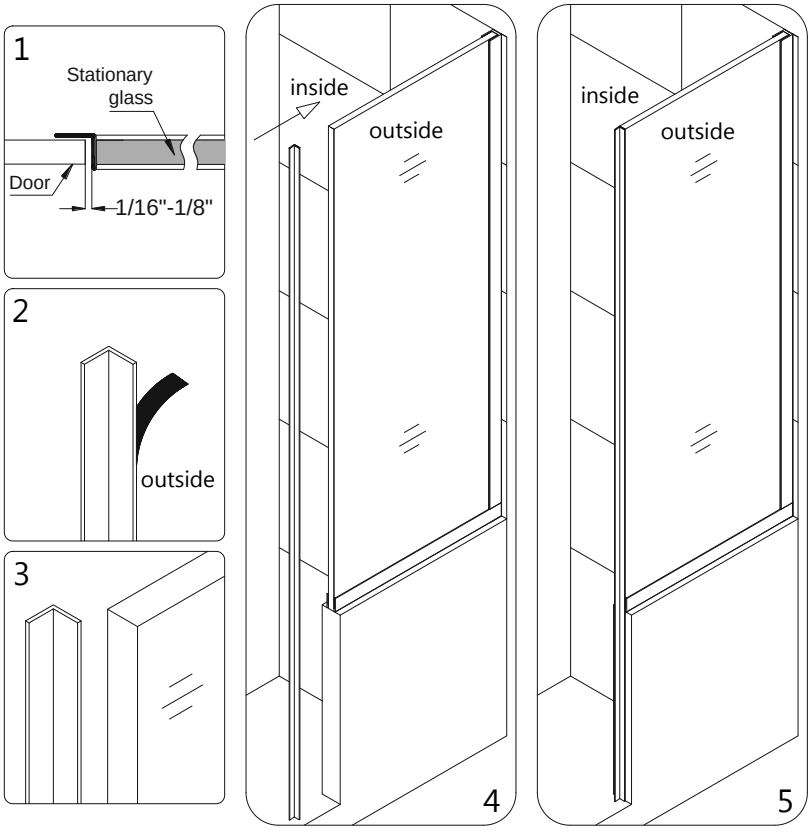

Fig. 17

©2017 DreamLine. All Rights Reserved

Product Maintenance

BASES and BACKWALLS: To ensure long lasting life for your acrylic back walls: wipe them off after each use with a soft cloth. To clean the acrylic back walls use non-abrasive sprays or cream based cleaners. Avoid the use of aerosol spray cleaners. Never use abrasive cleansers, metal brushes or scrapers that could scratch or dull the surface.

GLASS: To ensure long lasting life for your glass shower products: wipe them off after each use with a soft cloth. Rinse and wipe off the glass using either a soft cloth or a squeegee to prevent soap buildup and water spots (Hard water can etch the surface of the glass over time if left to dry). To prevent scratching the surface: never use abrasive cleaners or cleaning products that contain scouring agents. Never use bristle brushes or abrasive sponges that may scratch the surface.

HARDWARE: To ensure a long lasting finish: wipe off the metal parts after each use with a soft cloth. Do not use abrasive cleaners or cleaning products containing ammonia, bleach or acid. If accidentally used, rinse the surface as soon as possible to prevent damage to the finish (peeling or corrosion). After cleaning the polished finishes, rinse thoroughly and wipe dry with soft cloth. Clean stainless steel surfaces at least once a week. When applying stainless steel cleaner or polish to stainless steel hardware, work with (not across) the grain. Never use an abrasive sponge or cloth, steel wool or wired brush as these may permanently scratch the surfaces.

NOTE: To maximize the life of your door, it is important to regularly inspect the glass and other hardware for misalignment, proper attachment, and/or damage. Contact DreamLine with any questions or concerns.

©2017 DreamLine. All Rights Reserved



TEL: 866-731-2244
FAX: 866-857-3638
DREAMLINE.COM

For more information on DreamLine® Shower Doors and Enclosures please visit DreamLine.com