B02



THKFBV102
INSTALLATION INSTRUCTIONS

*The vessel set is not included

DIMENSIONS

Unit:inch

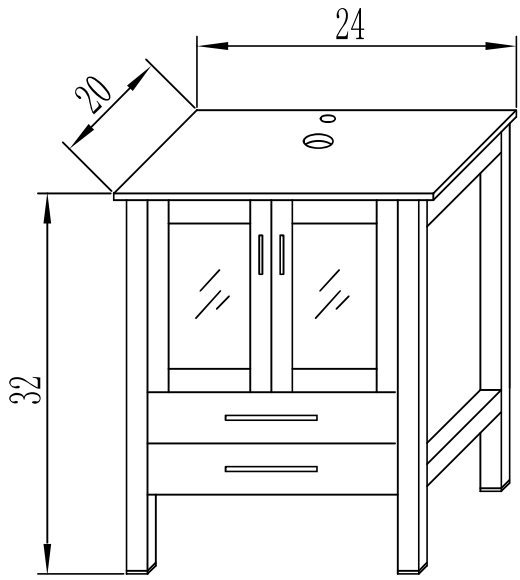

ASSEMBLY DIAGRAM

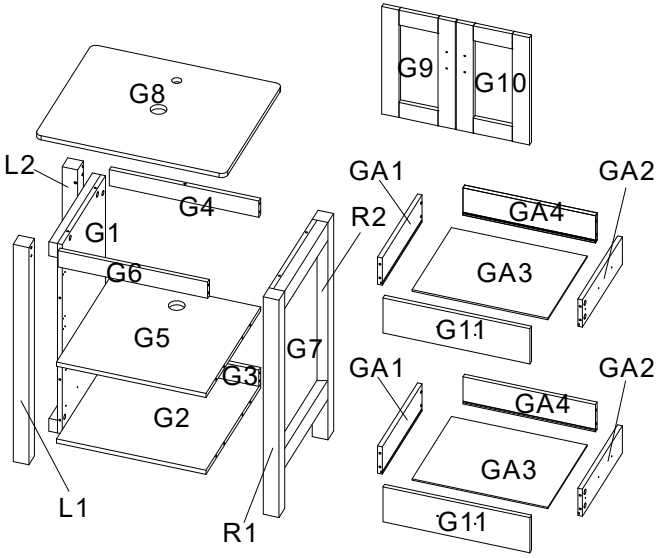

PARTS LIST

PARTS LIST		
NO.	DESCRIPTION	QTY
L1		1
L2		1
R1		1
R2		1
G1	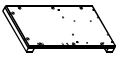	1
G2	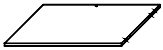	1
G3	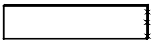	1
G4		1
G5	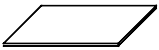	1
G6	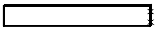	1
G7		1
G8	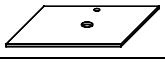	1
G9		1
G10		1
G11	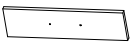	2
GA1		2

Ga2	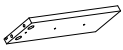	2
Ga3	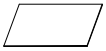	2
Ga4		2

HARDWARE LIST		
NO.	DESCRIPTION	QTY
A	 CAM LOCK	53
B	 CAM SCREW	53
C	 CAM LOCK COVER	53
D	 WOODEN DOWEL	28
E	 SCREW	46
F	 HINGE	4
G	 HASCREW(φ4x18mm)	8
I	 HANDLE	2
J	 HANDLE	2
M		4
N		2

CAUTION: Please confirm the parts list before installtion

YOU MAY NEED (NOT SUPPLIED)







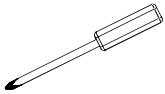

INSTALLATIONS

STEP1

HARDWARE LIST	
B 22PCS	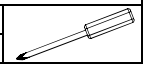

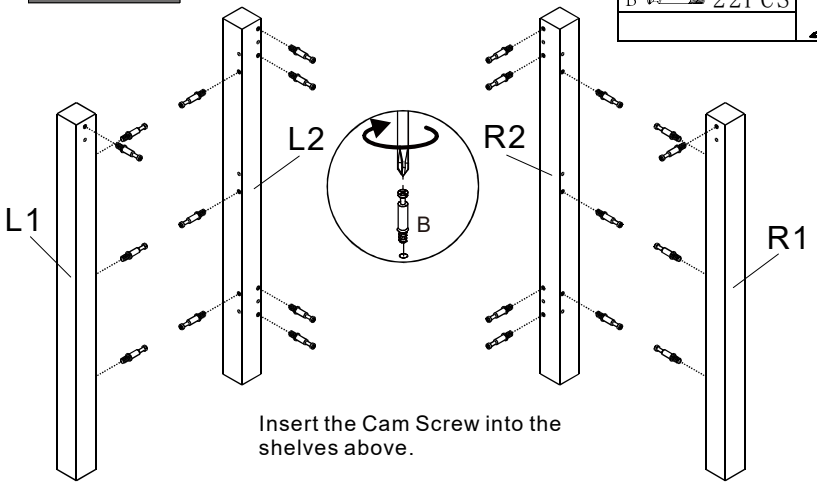

Insert the Cam Screw into the shelves above.

STEP2

HARDWARE LIST		
A	12PCS	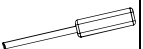
C	12PCS	
D	14PCS	

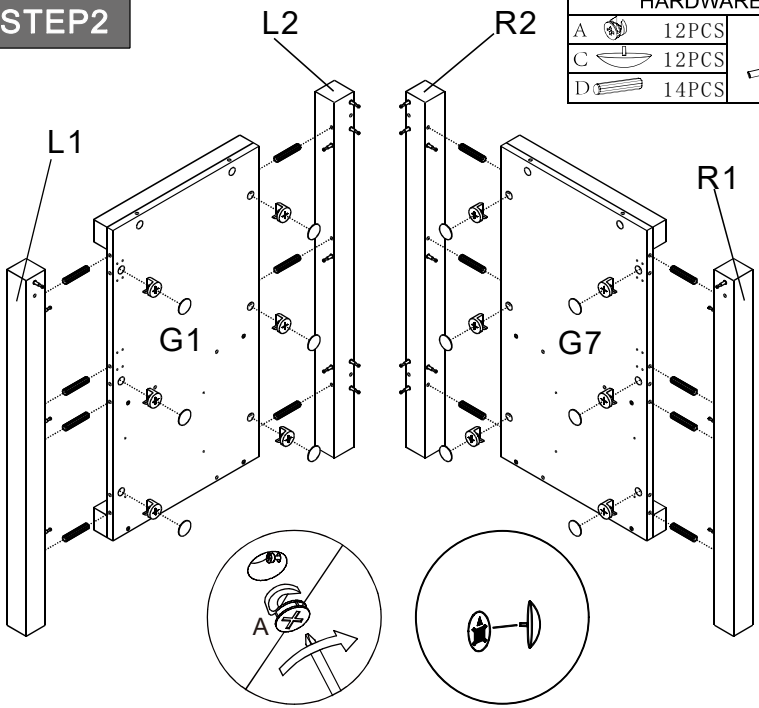

STEP3

HARDWARE LIST	
B 8PCS	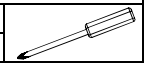

● Insert the Cam Screw into the shelves above.

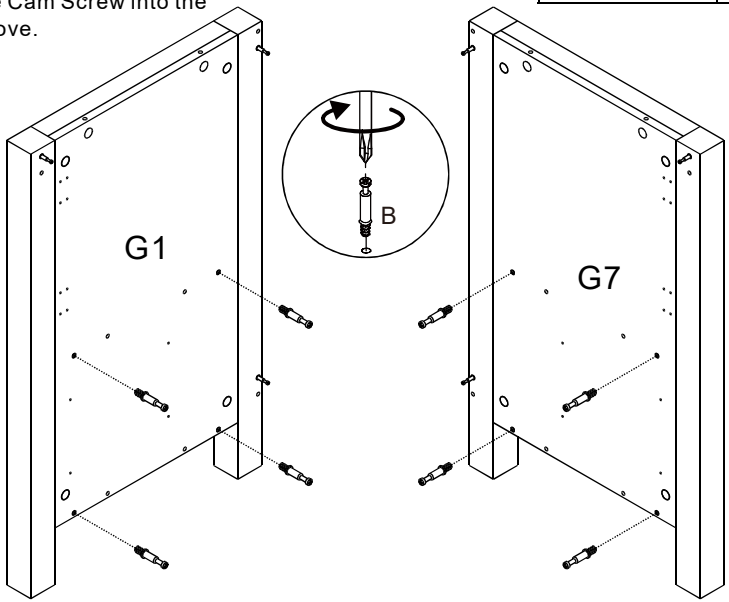

STEP4

HARDWARE LIST	
M	4PCS

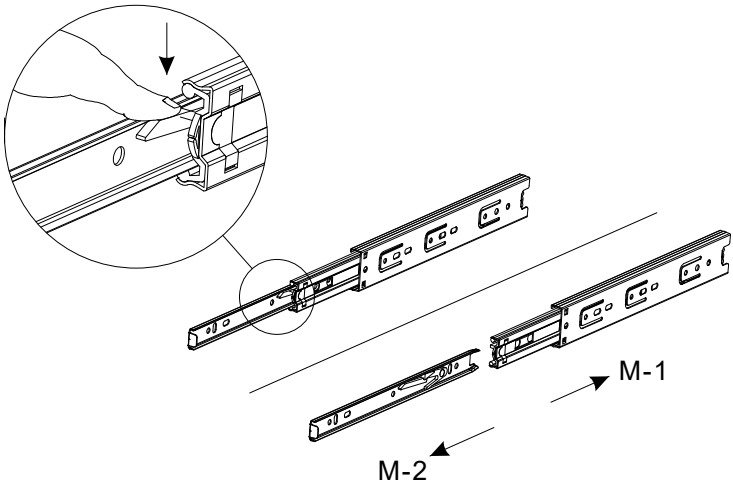

● Press the button and extend the slide slowly. Then separate it with the release latch. Repeat these steps for the other slides.

STEP5

HARDWARE LIST	
E 8PCS	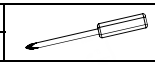



4PCS M-1

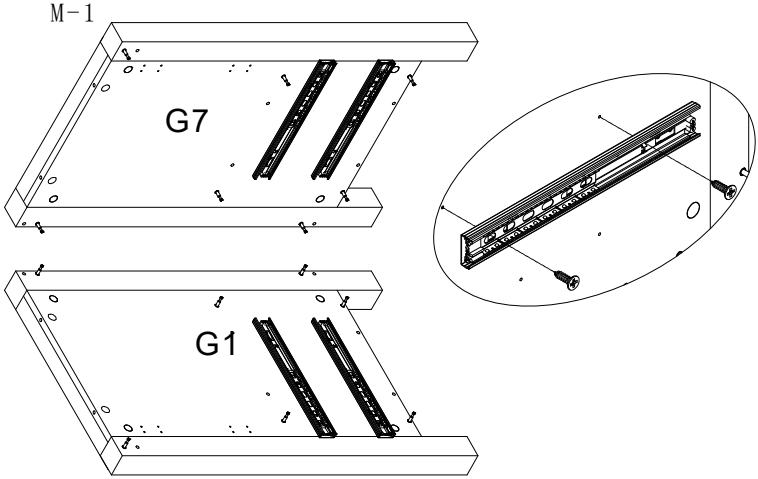

● Insert the screws to connect the slides (M-1) to the shelves.

STEP6

HARDWARE LIST	
B 23PCS	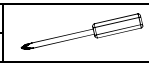

● Insert the Cam Screw into the shelves above.

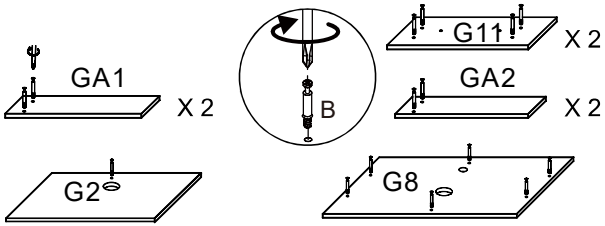

STEP7

HARDWARE LIST	
D 14PCS	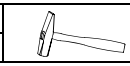

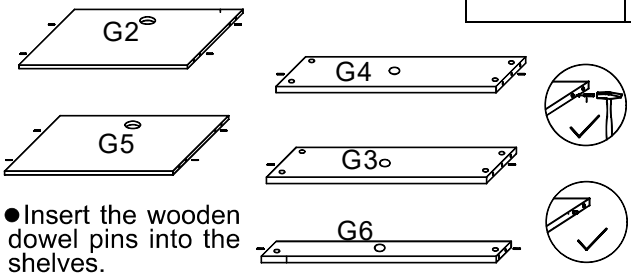

● Insert the wooden dowel pins into the shelves.

STEP8

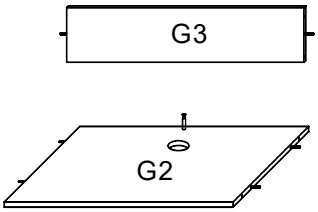

HARDWARE LIST	
A 1PCS	
C 1PCS	

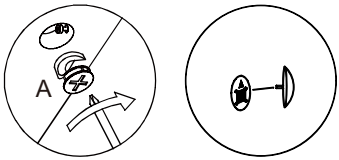

● Insert shelves G3 downwards to thein correspondingpositions.Then tighten the cam lock with the cover

STEP9

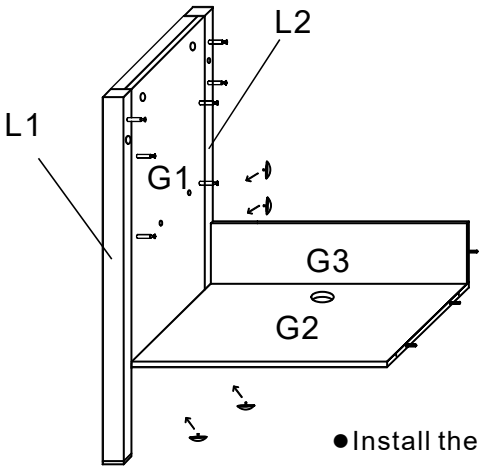

HARDWARE LIST	
A 4PCS	
C 4PCS	

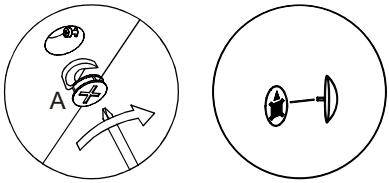

● Install the shelves #G2.#G3 on the G1 and L2.

STEP10

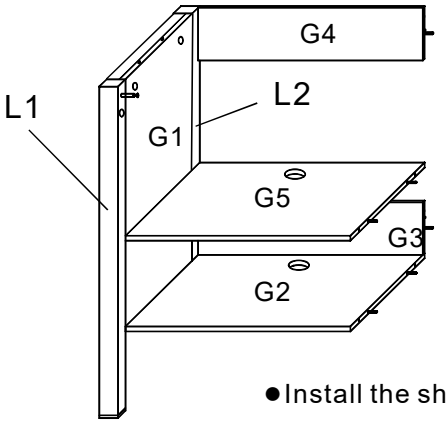

HARDWARE LIST	
A 4PCS	
C 4PCS	

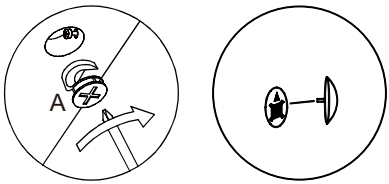

● Install the shelves #G4.#G5 on the G1 and L2.

STEP11

HARDWARE LIST		
A	16PCS	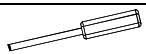
C	16PCS	

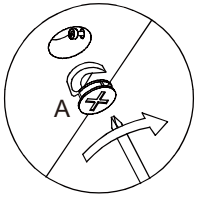

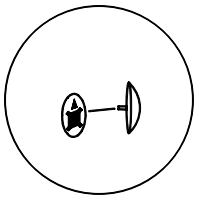

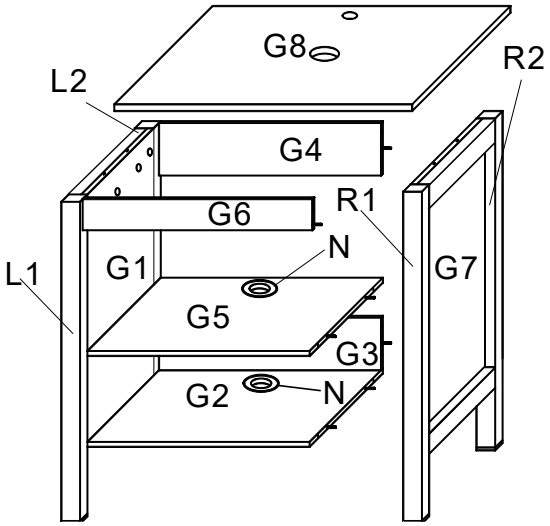

● Install shelves #G8,#G6,G7(#R1,#R2) in order. Then tighten the carr ock with the cover.

STEP12

HARDWARE LIST		
E	8PCS	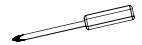
F	4PCS	

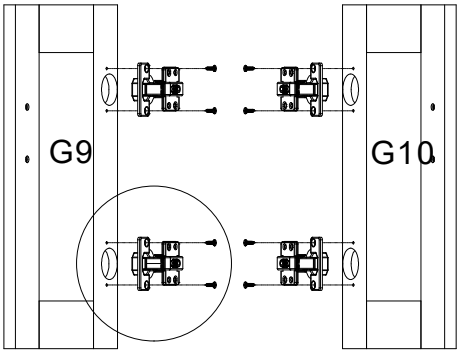

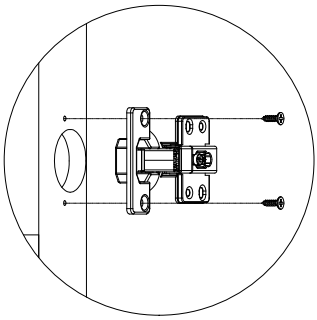

● Apply the screws to fix the hinges on the shelves #G9 #G10.

STEP13

HARDWARE LIST	
E 16PCS	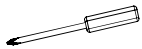
G 4PCS	
I 2PCS	

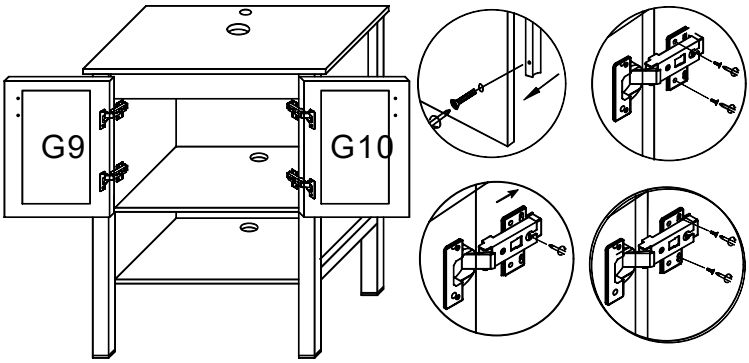

● Use E SCREWS to connect the hinge bracket to the cabinet.

Note:see step 17 to adjust the door's position.

STEP14

HARDWARE LIST	
A 16PCS	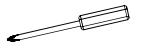
C 16PCS	
G 4PCS	
I 2PCS	

● Install shelves#GA1、GA2、GA3、GA4 in order, and then #G11.

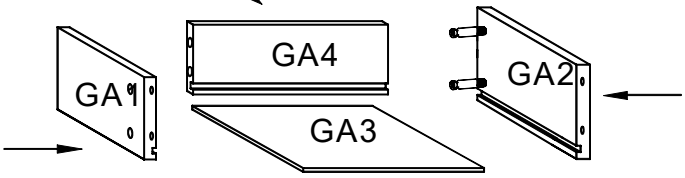

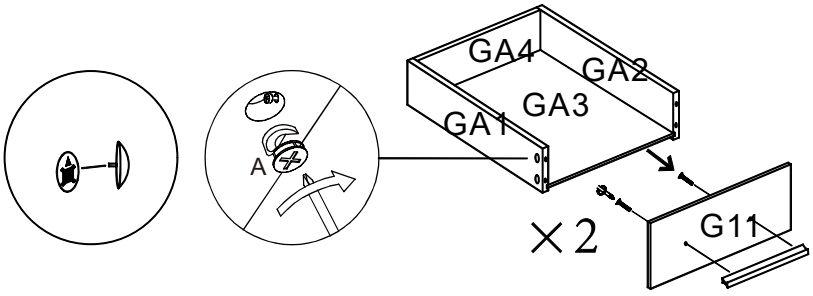

● Use G SCREWS to fix the handle on the shelf#G11. Repeat for the second drawer.

STEP15

HARDWARE LIST	
E 12PCS	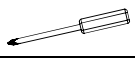

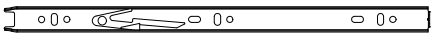

4PCS M-2

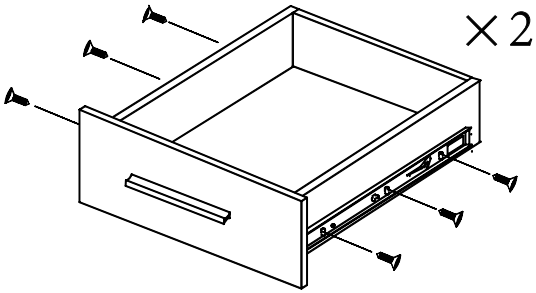

- Insert the screws to conncet the slides(M-2) to the drawer side.

STEP16

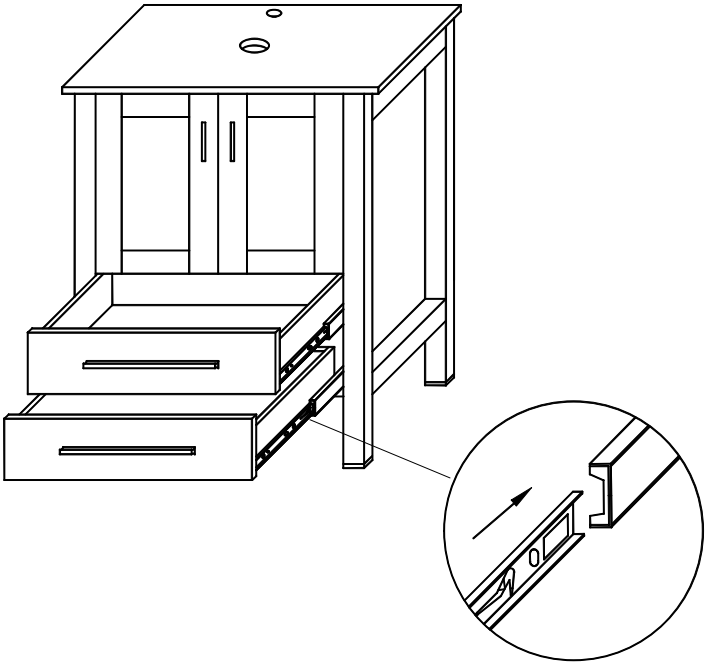

- Connect the drawer to the slide inside the cabinet.Then slide the drawer in and out to ensure smooth operation.

STEP17

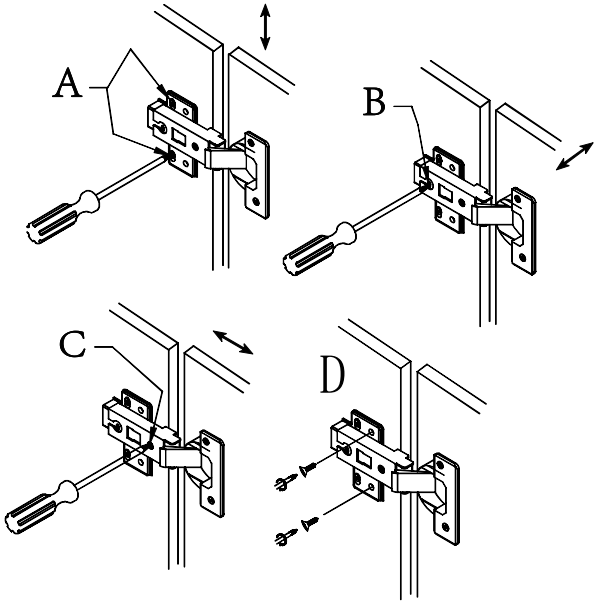

A.height adjustment
B.depth adjustment
C.side to side adjustment
D.after adjustment A/B/C, tighten screws.

To ensure proper cabinet alignment, refer to the above illustrations for instructions about adjusting the cabinet height, depth and lateral movement.

STEP18

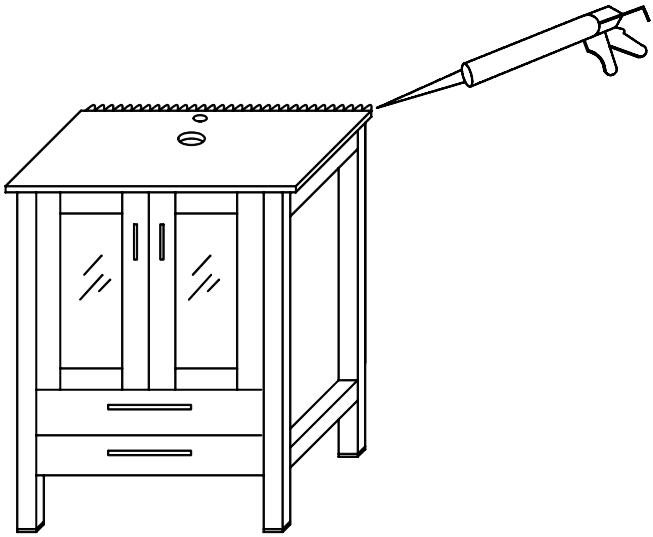

To help prevent mildew, apply sealant to the space between the wall and the edge of the cabinet.

CARE AND CLEANING

1. Many cleansers contain abrasive and chemical substance which is not suitable for cleaning stainless steel, enamel, plating or plastic products. You may use mild cleansers or soaps to clean the surfaces. Wipe any splashes of cleaner solutions from the surface with a clean soft cloth.

2. Maintain ventilation in the bathroom and separate the dry area from the damp one if conditions permit. Try to open the door and windows of the bathroom to maintain adequate ventilation.

3. This cabinet is built to withstand normal bathroom humidity. For best results, keep this vanity dry and take necessary steps to minimize bathrom humidity by opening windows and doors and using the exhaust fan (if available).

4. To maintain the cabinet door, clean and wipe the door regularly with a soft cloth. Wipe condensation with a dry, soft cloth. Keep away from fires and high temperatures.

5.Please do not sit,lean or step on the basin cabinet.

FEEDBACK ★★★★★

Thank you very much for purchasing from us.

We have always been trying to provide the best service and reliable products for every customer.

However, accident may happen sometimes, please contactus to resolve any issue before leaving a negative feedback.

Many thanks and welcome to our shop again!

Contact number: (323) 393-8260

E-mail: service@eclifeusa.com