American Imaginations

Product ID 23441

	QTY	Product ID	Series	Product Type	Description	Color	Stock*	Expected Stock*	Expected Stock ETA*
	1	1795	N/A	Bathroom Sink Drain	2.60-in. W Stainless Steel Bathroom Sink Drain With Overflow In Chrome	Chrome	64	0	
	1	16749	Walker Grande	Bathroom Sink Faucet	Deck Mount CUPC Approved Lead Free Brass Faucet In Chrome Color	Chrome	102	0	

**Estimated as of 16 Mar 2022 4:30 PM.*

Quality control approved in Canada. Each box on your order is physically opened-up and inspected to make sure only the highest quality product is shipped. We take and store photos of every single quality audit of every single order we ship. You can see them when you track your order on our website. This product is a group of multiple products. It features a oval shape. This bathroom sink faucet set is designed to be installed as a above counter bathroom sink faucet set. It is constructed with stainless steel. This bathroom sink faucet set comes with a brass finish in Chrome color. This modern bathroom sink faucet set product is CUPC certified. It is designed for a deck mount faucet.

Feature(s):

• THIS PRODUCT INCLUDE(S): 1x bathroom sink drain in chrome color (1795), 1x bathroom sink faucet in chrome color (16749).
• This product is a bundle (set of multiple products).
• This bathroom sink faucet set features a oval shape with a modern style.
• This product is made for above counter installation.
• DIY installation instructions are included in the box.
• This bathroom sink faucet set is designed for a deck mount faucet and the faucet drilling location is on the deck mount.
• Comes with an overflow for safety.
• This bathroom sink faucet set is made with stainless steel.
• CUPC certified.
• Most city inspectors require the use of certified products to get approval.
• The primary color of this product is chrome and it comes with chrome hardware.
• Constructed with lead-free brass, ensuring strength and durability.
• Solid bulky brass feel (not cheap and light).
• 3-in. Width (left to right).
• 6-in. Depth (back to front).
• 11-in. Height (top to bottom).
• All dimensions are nominal.
• This product can usually be shipped out in 1 day.
• Quality control approved in Canada.
• Each box on your order is physically opened-up and inspected to make sure only the highest quality product is shipped.
• We take and store photos of every single quality audit of every single order we ship.
• You can see them when you track your order on our website.

Product ID:	16749
Product Type:	Bathroom Sink Faucet Set
Shape:	Oval
Install Type:	Above Counter
Faucet Drilling:	Deck Mount
Faucet Drilling Location:	Deck Mount
Overflow:	Yes
Includes Faucets:	Yes
Includes Drains:	Yes
Width Group:	0-in. - 9-in.
Material:	Stainless Steel
Certification:	CUPC
Style:	Modern
Finish:	Brass
Hardware Color:	Chrome
Color:	Chrome
Recommended Ship Method:	SP

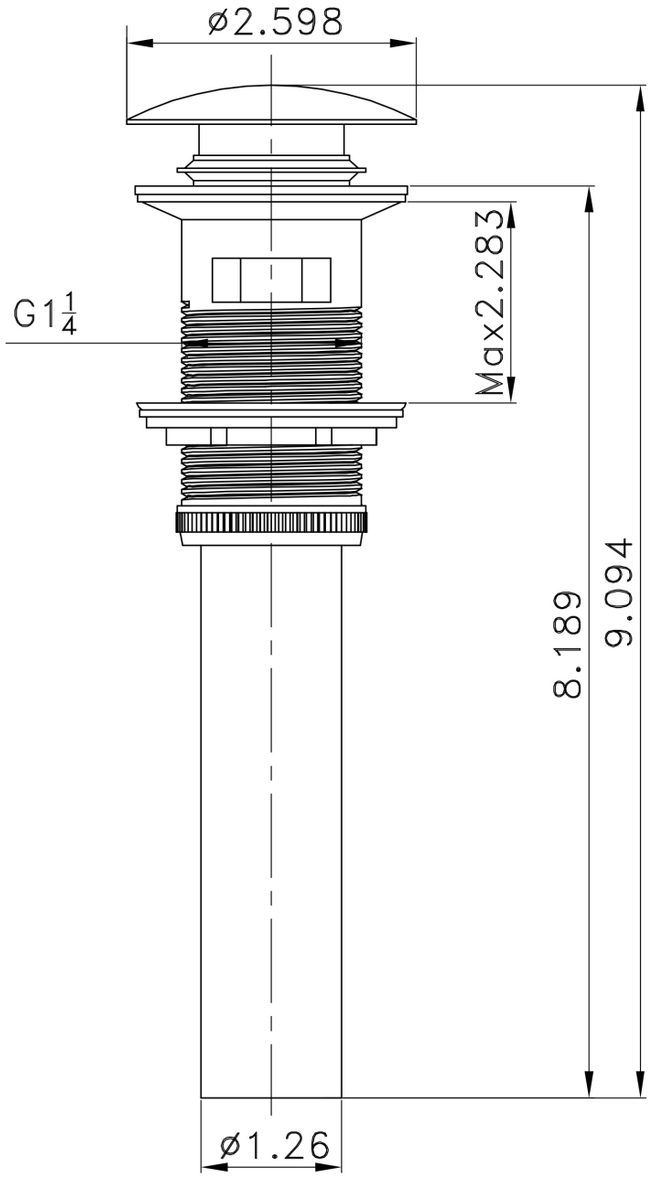
ø2.598
G1 1/4
Max2.283
8.189
9.094
ø1.26

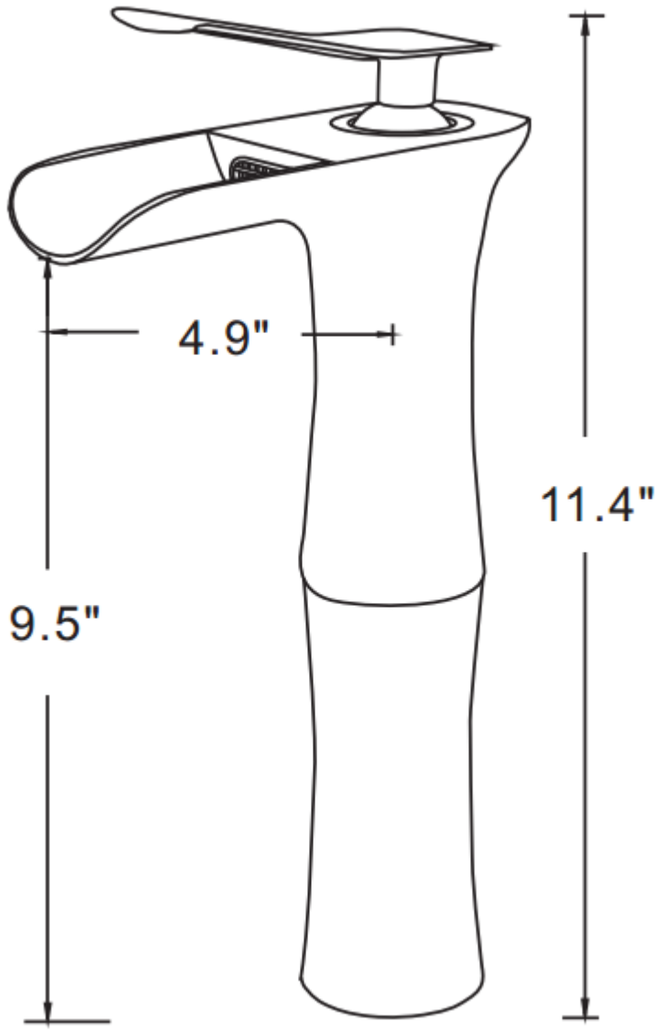
4.9"
11.4"
9.5"

Notes