ITEM #7848950
MODEL #CSD42LW5L

CHESHIRE II FAN

Español p. 19

ATTACH YOUR RECEIPT HERE

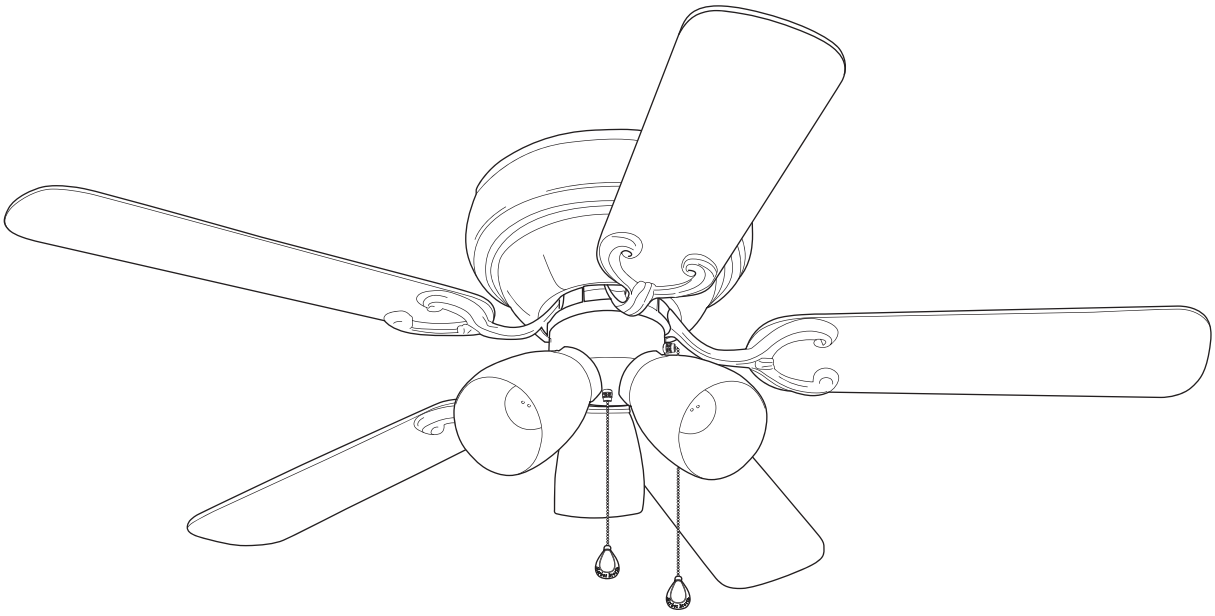

E124404

Purchase Date _____

Questions, problems, missing parts?
Before returning, contact us on:
800-527-1292, 8:30 a.m. - 5 p.m., CST, Monday - Friday.

TABLE OF CONTENTS

Safety Information 2

Package Contents 5

Hardware Contents 6

Preparation 6

Initial Installation 6

Wiring 9

Final Installation 11

Installing Fan Without Included Light Kit (Optional) 14

Operation Instructions 15

Care and Maintenance 17

Troubleshooting 17

Warranty 18

Replacement Parts List 18

SAFETY INFORMATION

CAUTION: Changes or modifications not approved by the party responsible for compliance could void the user's authority to operate the equipment.

*NOTE: This equipment has been tested and found to comply with the limits for a Class B digital device, pursuant to Part 15 of the FCC Rules. These limits are designed to provide reasonable protection against harmful interference in a residential installation. This equipment generates, uses and can radiate radio frequency energy and, if not installed and used in accordance with the instructions, may cause harmful interference to radio communications. However, there is no guarantee that interference will not occur in a particular installation. If this equipment does cause harmful interference to radio or television reception, which can be determined by turning the equipment off and on, the user is encouraged to try to correct the interference by one or more of the following measures:

* Reorient or relocate the receiving antenna.
* Increase the separation between the equipment and receiver.
* Connect the equipment into an outlet on a circuit different from that to which the receiver is connected.

Consult the dealer or an experienced radio/TV technician for help.

Distributed by: Litex Industries Inc., P.O. Box 535639, Grand Prairie, TX, 75053; 1-800-527-1292

The device complies with Part 15 of the FCC Rules. Operation is subject to the following two conditions: (1) this device may not cause harmful interference, (2) this device must accept any interference received, including interference that may cause undesired operation.

NOTE: Dimmable to 10% with select dimmers.

SAFETY INFORMATION

READ AND SAVE THESE INSTRUCTIONS

Please read and understand this entire manual before attempting to assemble, install or operate the product.

- Do not discard fan carton or foam inserts. Should this fan need to be returned to the factory for repairs, it must be shipped in its original packaging to ensure proper protection against damage that might exceed the initial cause for return.
- Make sure all electrical connections comply with local codes, ordinances, the National Electrical Code and ANSI/NFPA 70-1999. Hire a qualified electrician or consult a do-it-yourself wiring handbook if you are unfamiliar with installing electrical wiring.
- Make sure the installation site you choose allows a minimum clearance of 7 ft. from the blades to the floor and at least 30 in. from the end of the blades to any obstruction.
- After you install the fan, make sure all connections are secure to prevent the fan from falling.
- The net weight of this fan including the light kit is: 12.1 lbs.

⚠ DANGER

When using an existing outlet box, make sure the outlet box is securely attached to the building structure and can support the full weight of the fan. Failure to do this can result in serious injury or death. The stability of the outlet box is essential in minimizing wobble and noise in the fan after installation is complete.

To reduce the risk of serious bodily injury, DO NOT use power tools to assemble any part of the fan, including the blades.

Before installation, be sure to shut off electricity at main switch or circuit breaker in order to avoid electrical shock.

⚠ WARNING

To reduce the risk of fire, electrical shock or personal injury, mount fan to outlet box marked "ACCEPTABLE FOR FAN SUPPORT OF 35 LBS. (15.9 KG) OR LESS" and use mounting screws provided with the outlet box. Most outlet boxes commonly used for the support of lighting fixtures are not acceptable for fan support and may need to be replaced. Consult a qualified electrician if in doubt.

When mounting fan to a ceiling outlet box, use a METAL octagonal outlet box; do NOT use a plastic outlet box. Secure the outlet box directly to the building structure. The outlet box and its support must be able to support the moving weight of the fan (at least 35 lbs.).

To avoid personal injury, the use of gloves may be necessary while handling fan parts with sharp edges.

To reduce the risk of fire, electrical shock or personal injury, wire connectors provided with this fan are designed to accept only one 12-gauge house wire and two lead wires from the fan. If your house wire is larger than 12-gauge or there is more than one house wire to connect to the corresponding fan lead wires, consult an electrician for the proper size wire connectors to use.

SAFETY INFORMATION

⚠ WARNING

To reduce the risk of fire or electrical shock, do not use the fan with any solid state speed control device or control fan speed with a full range dimmer switch.

To reduce the risk of fire, electrical shock or personal injury, do not bend the blade arms when installing them, balancing the blades or cleaning the fan. Do not insert objects between the rotating fan blades.

To reduce the risk of personal injury, use ONLY parts provided with this fan. The use of parts OTHER than those provided with this fan will void the warranty.

⚠ CAUTION

Be sure outlet box is properly grounded and that a ground wire (green or bare) is present.

Once installation is complete, carefully check all screws, bolts and nuts on fan motor assembly to ensure they are secure.

PACKAGE CONTENTS

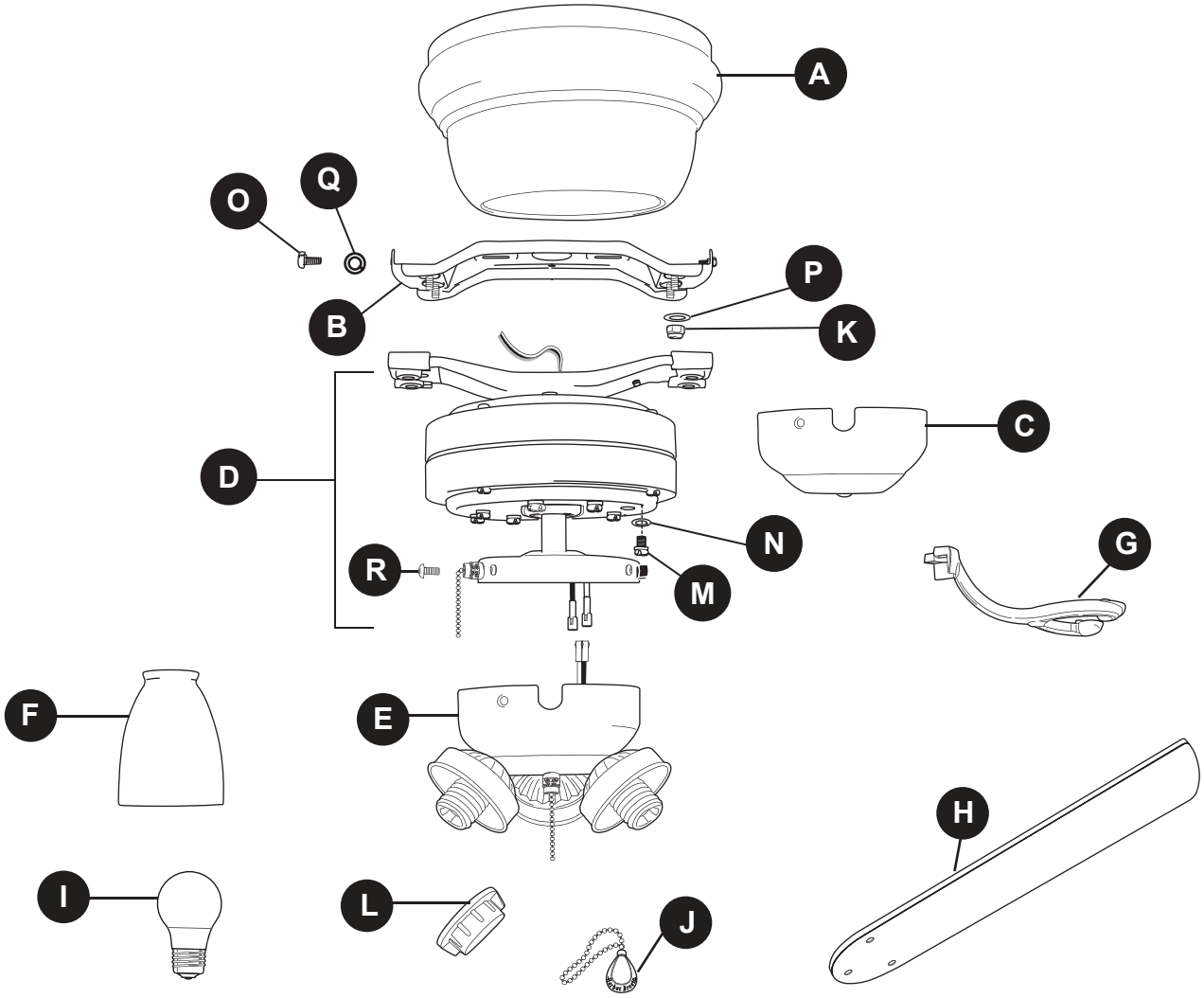

PART	DESCRIPTION	QUANTITY
A	Motor Housing	1
B	Mounting Bracket	1
C	Extra Switch Housing	1
D	Motor Assembly	1
E	Light Kit Fitter	1
F	Shade	3
G	Blade Arm	5
H	Blade	5
I	LED Bulb	3
J	Pull Chain Extension	2
K	Mounting Bracket Nut (preassembled)	4
L	Socket Ring (preassembled)	3

PART	DESCRIPTION	QUANTITY
M	Motor Screw (preassembled)	10 + 1 extra
N	Lock Washer (preassembled)	10 + 1 extra
O	Motor Housing Mounting Screw (preassembled)	4
P	Mounting Bracket Flat Washer (preassembled)	4
Q	Motor Housing Lock Washer (preassembled)	4
R	Switch Housing Plate Screw (preassembled)	3

⚠ **IMPORTANT REMINDER**: You must use the parts provided with this fan for proper installation and safety. ⚠

HARDWARE CONTENTS (shown actual size)

AA



Blade Screw

Qty. 15
+ 1 extra

BB

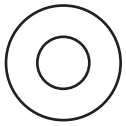

Fiber Blade Washer

Qty. 15
+ 1 extra

CC

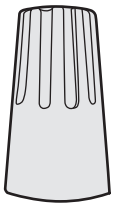

Wire Connector

Qty. 4

PREPARATION

Before beginning assembly of product, make sure all parts are present. Place motor on carpet or on foam to avoid damage to finish. Compare parts with package contents list and hardware contents list. If any part is missing or damaged, do not attempt to assemble the product.

Estimated Assembly Time: 120 minutes

Tools Required for Assembly (not included): Electrical Tape, Phillips Screwdriver, Pliers, Safety Glasses, Stepladder and Wire Strippers

Helpful Tools (not included): AC Tester Light, Tape Measure, Do-It-Yourself Wiring Handbook and Wire Cutters

INITIAL INSTALLATION

1. Turn off circuit breakers and wall switch to the fan supply line leads.

   ⚠ **DANGER**: Failure to disconnect power supply prior to installation may result in serious injury or death.

1

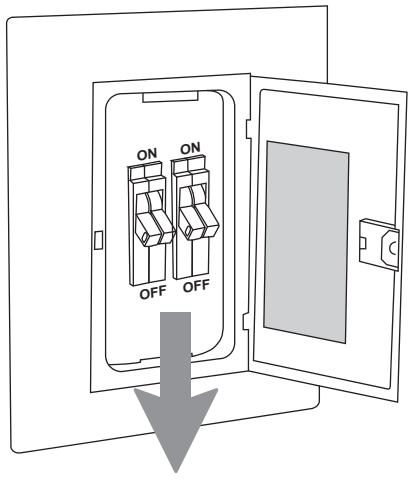

INITIAL INSTALLATION

2. Check to make sure blades (H) will be at least 30 in. from any obstruction and at least 7 ft. above the floor.

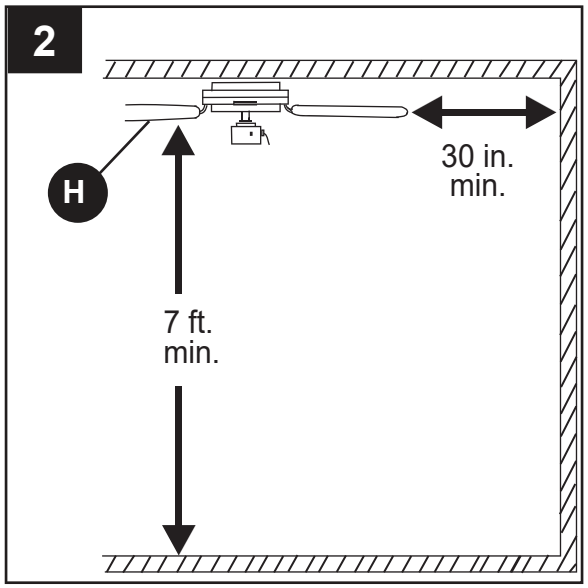

3. Remove all mounting bracket nuts (K) and mounting bracket flat washers (P) from mounting bracket (B).

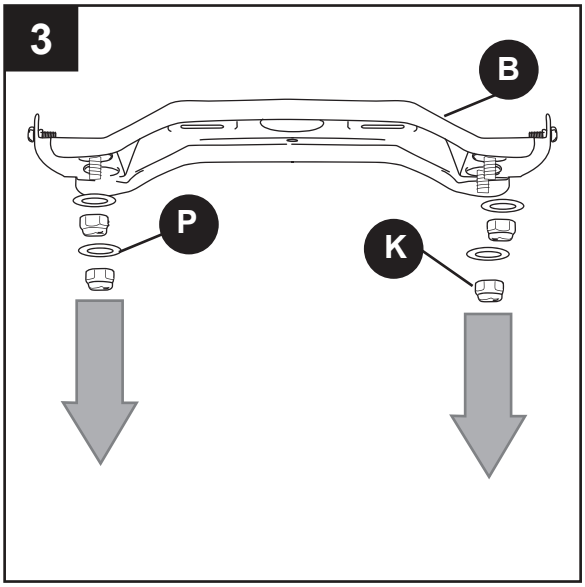

4. Secure mounting bracket (B) to outlet box using screws, spring washers, and flat washers provided with the outlet box.
   NOTE: It is very important that you use the proper hardware when installing the mounting bracket (B) as this will support the fan.

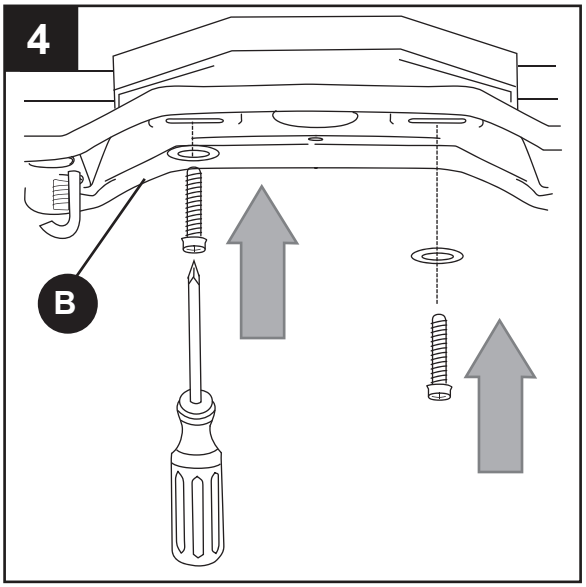

INITIAL INSTALLATION

5. Remove motor screws (M) and lock washers (N) from underside of motor assembly (D) and save for blade arm (G) attachment later on. [If there are plastic motor blocks installed with the motor screws (M) and lock washers (N), discard the plastic motor blocks.]

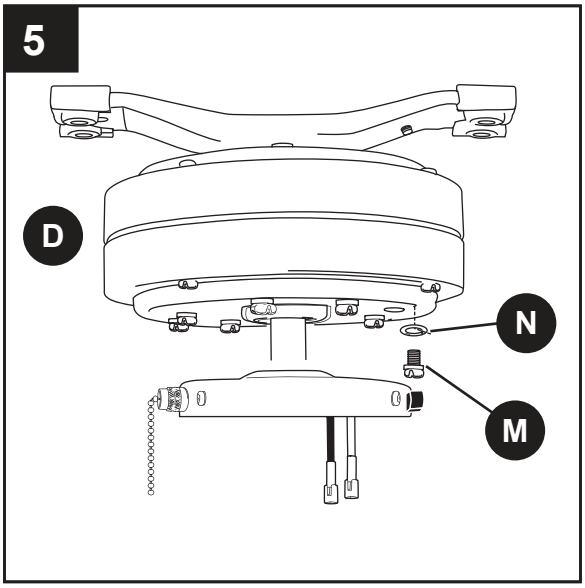

6. Slide the slot in the bar at the top of the motor assembly (D) onto the "J" hook on the mounting bracket (B) to support the fan during wiring.

   ⚠ **CAUTION**: Do not use the end of the bar on the motor assembly (D) with the small round hole to hang the motor assembly (D) on the mounting bracket (B).

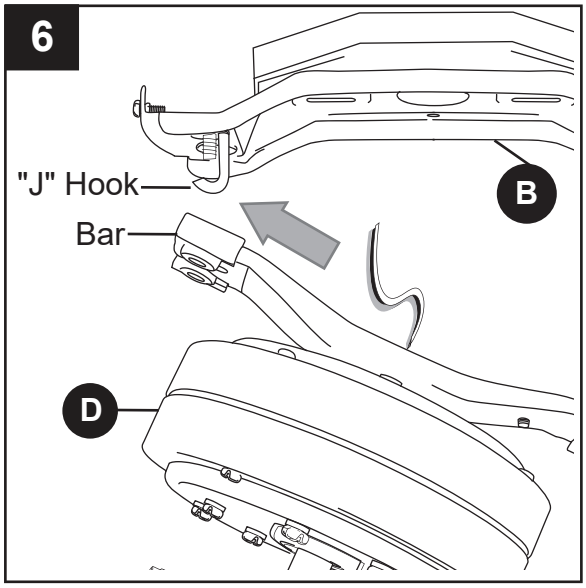

WIRING

⚠ **WARNING:** To reduce the risk of fire, electrical shock, or personal injury, wire connectors provided with this fan are designed to accept only one 12-gauge house wire and two lead wires from the fan. If your house wire is larger than 12-gauge or there is more than one house wire to connect to the corresponding fan lead wires, consult an electrician for the proper size wire connectors to use.

⚠ **CAUTION:** Be sure outlet box is properly grounded and that a ground (green or bare) wire is present.

⚠ **WARNING:** If house wires are different colors than referred to in the following steps, stop immediately. A professional electrician is recommended to determine wiring.

⚠ **WARNING:** Using a full range dimmer switch (not included) to control fan speed will cause a loud humming noise from fan. To reduce the risk of fire or electrical shock, do NOT use a full range dimmer switch to control fan speed.

1. Choose wiring diagram (Fig. 1A, Fig. 1B or Fig. 1C) that fits your situation and make appropriate wiring connections as follows: [**NOTE:** For each wire connection below and on the following page, use one of the wire connectors (CC) provided, making sure to screw wire connector (CC) on in a clockwise direction.]

   1A. **FAN AND LIGHT CONTROLLED BY PULL CHAINS:** Connect **BLACK** and **BLUE** wire from fan to **BLACK** wire from ceiling. Connect **WHITE** wire from fan to **WHITE** wire from ceiling. Connect all **GROUND** (**GREEN**) wires together from fan (on motor assembly (D) and mounting bracket (B)) to **BARE**/**GREEN** wire from ceiling.

FAN AND LIGHT CONTROLLED BY PULL CHAINS

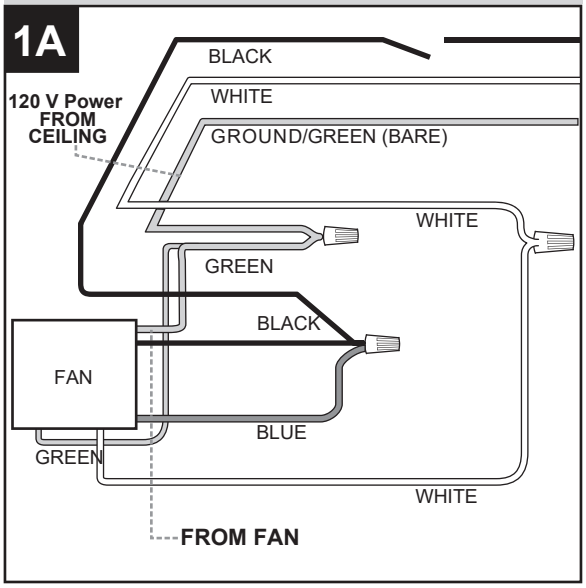

   1B. **FAN CONTROLLED BY PULL CHAIN, LIGHT BY WALL SWITCH:** If you intend to control the fan light with a separate wall switch, connect **BLACK** wire from fan to **BLACK** wire from ceiling. Connect **BLUE** wire from fan to the **BLACK** wire from the independent wall switch for the light. Connect **WHITE** wire from fan to **WHITE** wire from ceiling. Connect all **GROUND** (**GREEN**) wires together from fan (on motor assembly (D) and mounting bracket (B)) to **BARE**/**GREEN** wire from ceiling.

FAN CONTROLLED BY PULL CHAIN, LIGHT BY WALL SWITCH

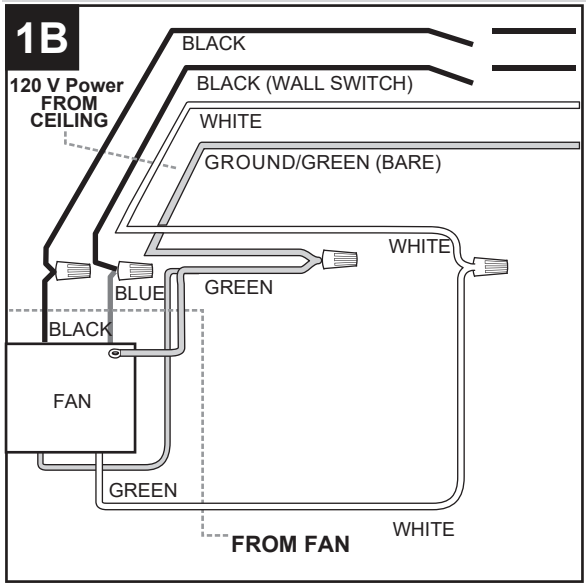

WIRING

1C. **FAN AND LIGHT CONTROLLED BY TWO WALL SWITCHES:** If you intend to control the fan and light with separate wall switches, connect **BLACK** wire from fan to **BLACK** wire from the independent wall switch for the fan. Connect **BLUE** wire from fan to the **BLACK** wire from the other independent wall switch for the light. Connect **WHITE** wire from fan to **WHITE** wire from ceiling. Connect all **GROUND** (**GREEN**) wires together from fan (on motor assembly (D) and mounting bracket (B)) to **BARE**/**GREEN** wire from ceiling.

FAN AND LIGHT CONTROLLED BY TWO WALL SWITCHES

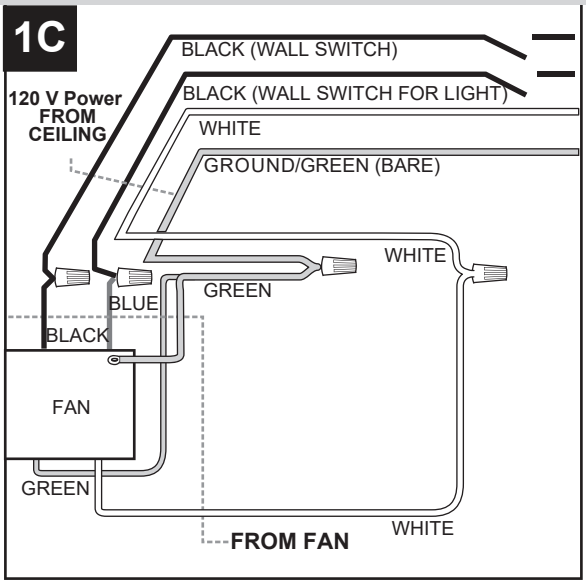

NOTE: Black wire is hot power for fan. Blue wire is hot power for light kit. White wire is common for fan and light kit. Green or bare wire is ground.

2. Wrap electrical tape (not included) around each individual wire connector (CC) down to the wire.

   ⚠ **WARNING**: Make sure no bare wire or wire strands are visible after making connections. Place green and white connections on opposite side of box from the black and blue (if applicable) connections.

   Turn spliced/taped wires upward and gently push wires and wire connectors (CC) into outlet box.

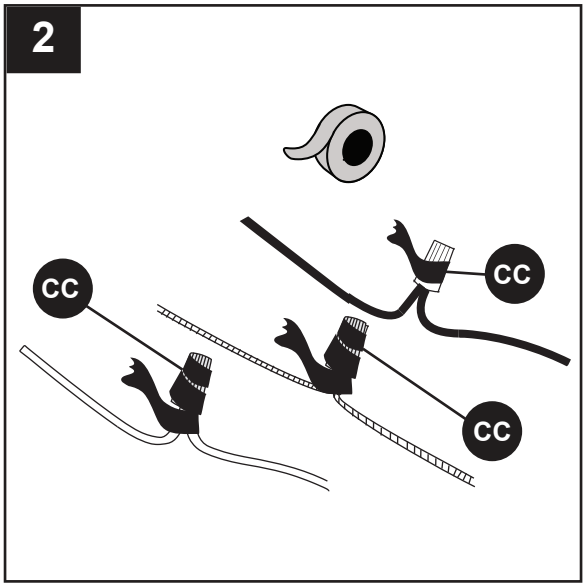

Hardware Used

CC Wire Connector 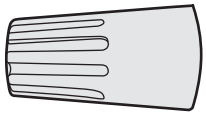 x4

FINAL INSTALLATION

1. Remove motor assembly (D) from "J" hook. Align holes in motor assembly (D) with holes in mounting bracket (B). Secure motor assembly (D) with mounting bracket flat washers (P) and mounting bracket nuts (K) that were previously removed (Step 3, page 7).

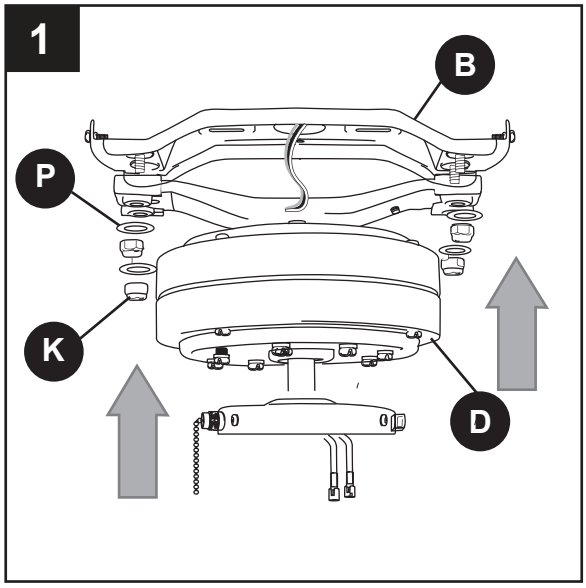

2. Temporarily lift motor housing (A) to mounting bracket (B) to determine which two motor housing mounting screws (O) in sides of mounting bracket (B) align with the slotted holes in the top edge of the motor housing (A) and partially loosen these two motor housing mounting screws (O). Remove the other two motor housing mounting screws (O) and motor housing lock washers (Q). Slide motor housing (A) over motor assembly (D), aligning slotted holes in motor housing (A) with loosened motor housing mounting screws (O) in mounting bracket (B). Twist motor housing (A) to lock. Re-insert the other two motor housing mounting screws (O), along with motor housing lock washers (Q), that were previously removed. Tighten all motor housing mounting screws (O) securely.

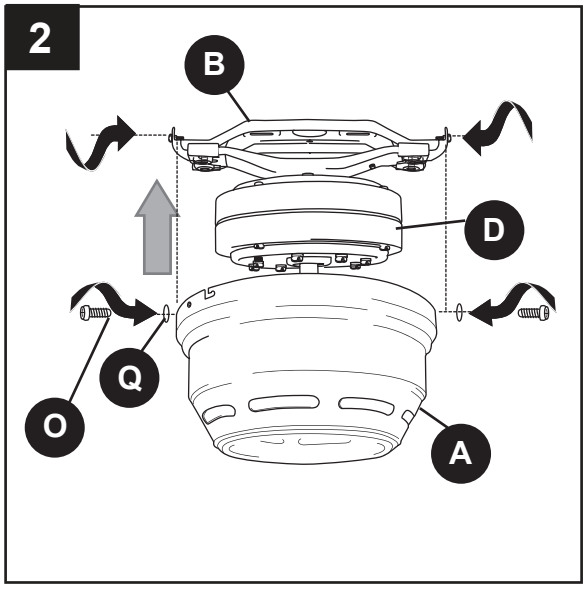

FINAL INSTALLATION

3. Partially insert three blade screws (AA), along with three fiber blade washers (BB), to attach one blade arm (G) to a blade (H). Then, tighten each blade screw (AA), starting with the one in the middle. Repeat with remaining blades (H).

Hardware Used

AA Blade Screw  x 15

BB Fiber Blade Washer 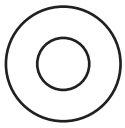 x 15

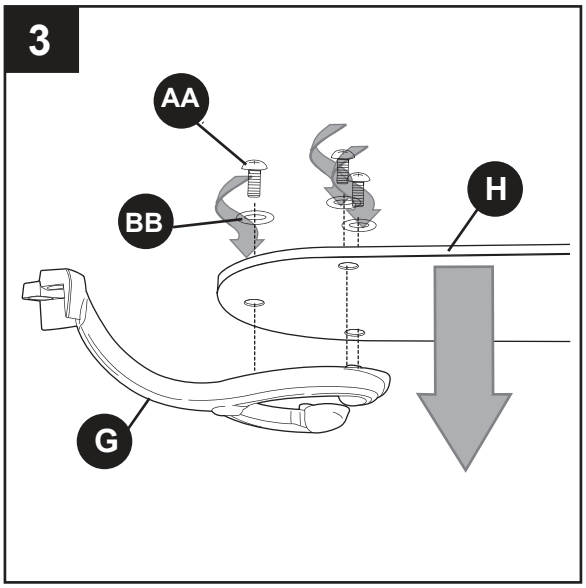

4. Locate motor screws (M) and lock washers (N) that were removed in Step 5 on page 8.

   Insert two motor screws (M), along with lock washers (N), through one blade arm (G) to attach blade arm (G) to motor. Tighten motor screws (M) securely.

   NOTE: For easy access to motor screws (M), rotate switch housing plate so that the flat part of the switch housing plate aligns with the two motor screw (M) holes on blade arm (G).

   Repeat Step 4 with remaining blade arms (G), making sure to completely secure each blade arm (G) before proceeding with the next.

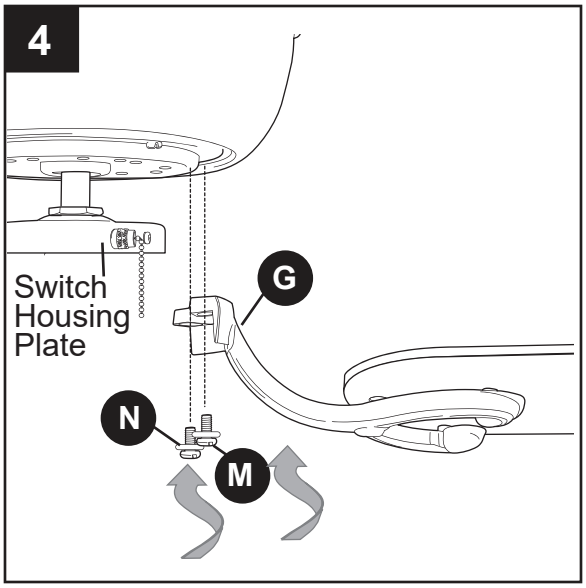

5. ***If you wish to USE the light kit***, remove three switch housing plate screws (R) from underside of motor. Locate **BLUE** (or **BLACK**) and **WHITE** wires in switch housing plate labeled “FOR LIGHT” and remove plastic from these two wires.

   Connect **WHITE** wire from light kit fitter (E) to **WHITE** wire from switch housing plate. Connect **BLACK** wire from light kit fitter (E) to **BLUE** (or **BLACK**) wire from switch housing plate. Make sure that molex connections are secure. Continue with Step 6.

   If you do NOT wish to use the light kit, please go to section entitled *“Using Fan Without Included Light Kit (Optional)”* on page 14.

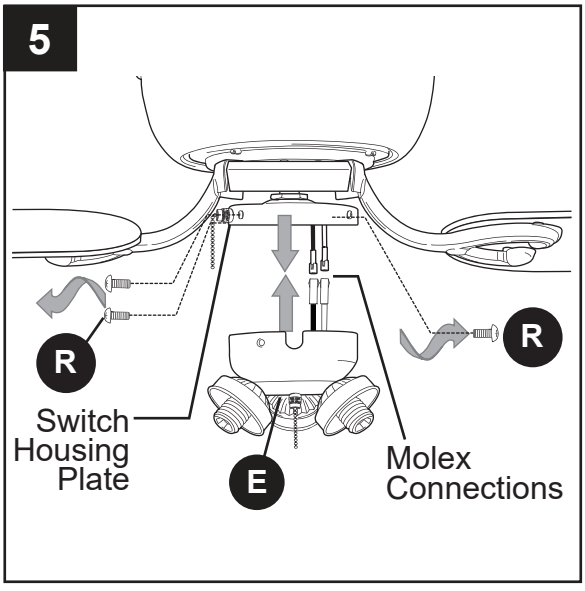

FINAL INSTALLATION

6. Gently push wires and molex connections into switch housing plate. Align fan pull chain slot with fan pull chain and attach light kit fitter (E) to fan with switch housing plate screws (R) that were removed in the previous step. Use a Phillips screwdriver (not included) to secure all three switch housing plate screws (R).

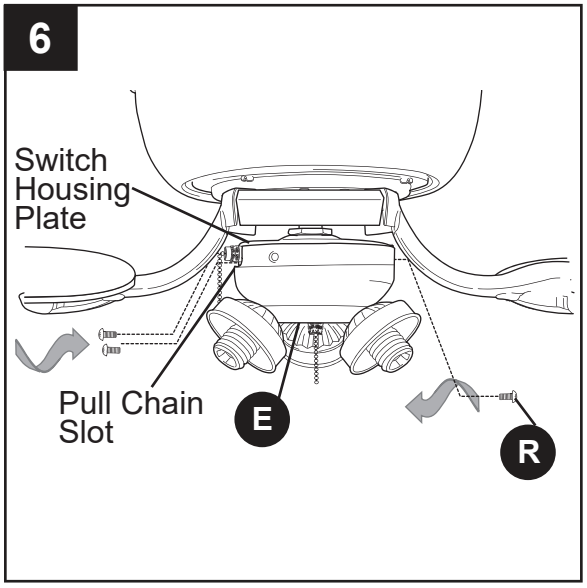

7. Remove socket ring (L) from each socket. Use one socket ring (L) to attach each shade (F).

   ⚠ **WARNING:** Do not overtighten socket rings (L) as shade (F) may crack or break.

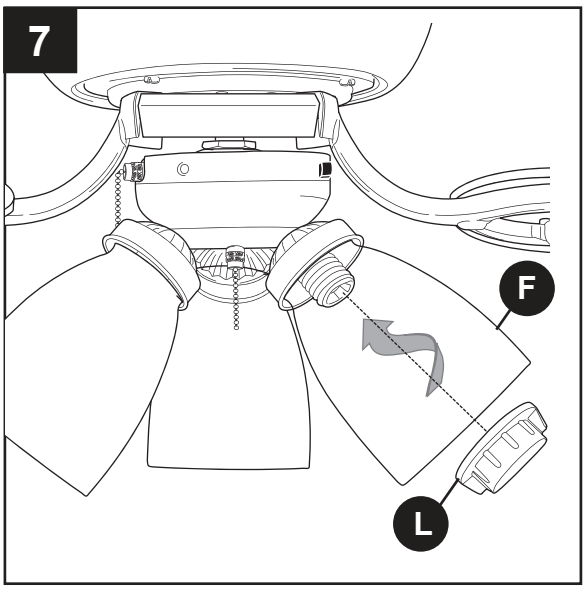

8. Install bulbs (I).

   ⚠ **WARNING:** When you need to replace bulbs, please allow bulbs (I) and shades (F) to cool down before handling them.

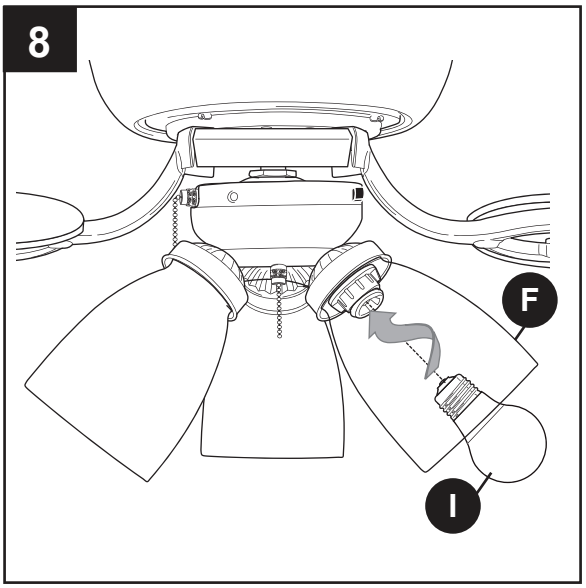

FINAL INSTALLATION

9. The pull chain extensions (J) supplied in one of the hardware packs or custom pull chain extensions (not included) may be attached to fan and light pull chains.

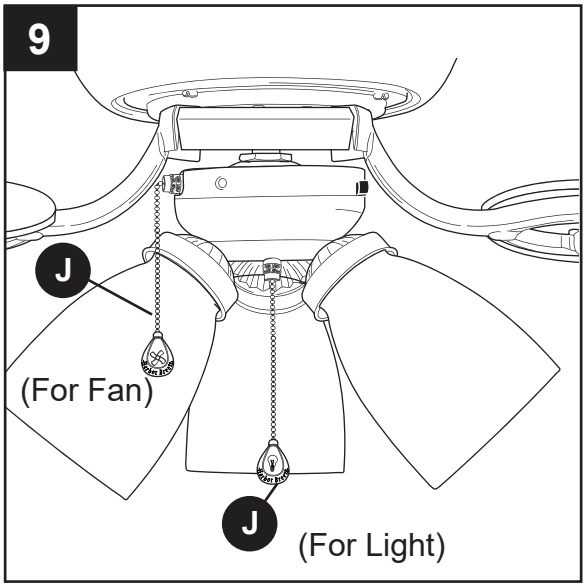

USING FAN WITHOUT INCLUDED LIGHT KIT (OPTIONAL)

1. ***If you do NOT wish to use the light kit,*** remove three switch housing plate screws (R).

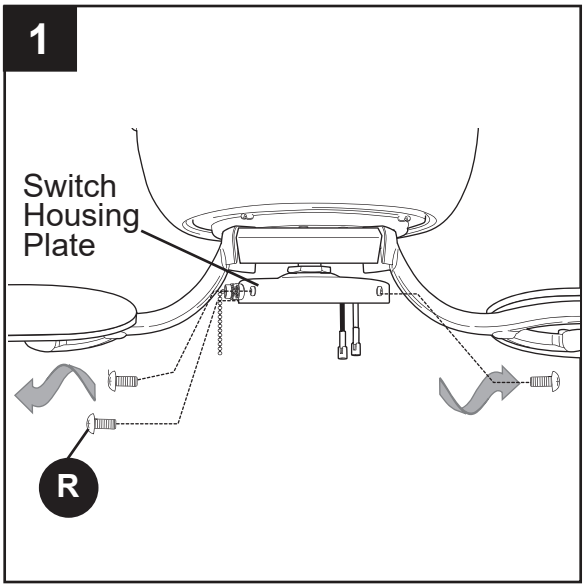

2. Align holes in extra switch housing (C) with holes in switch housing plate. (**NOTE**: The wide gap in the top edge of the extra switch housing (C) should align with the reverse switch on the switch housing plate for the proper fit.) Re-insert switch housing plate screws (R) that were just removed. Use a Phillips screwdriver (not included) to secure all switch housing plate screws (R).

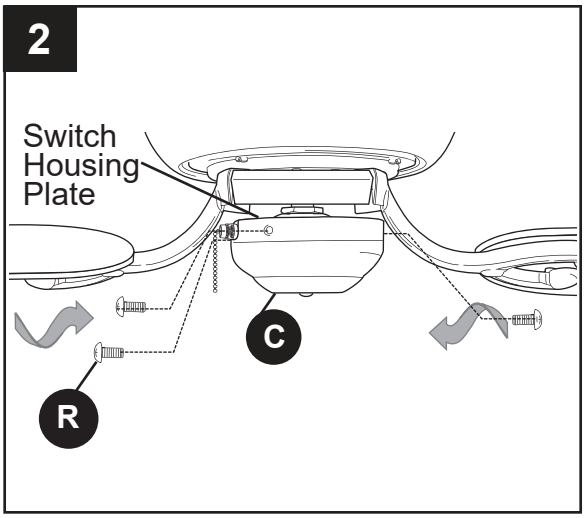

USING FAN WITHOUT INCLUDED LIGHT KIT (OPTIONAL)

3. The pull chain extension (J) supplied in one of the hardware packs or custom pull chain extension (not included) may be attached to fan.

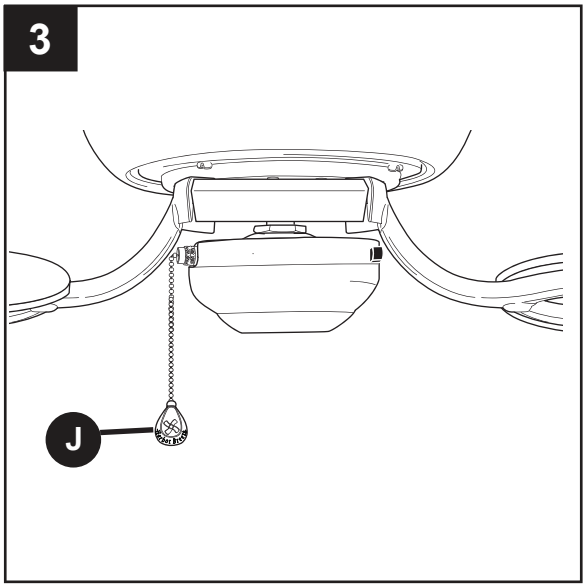

OPERATION INSTRUCTIONS

1. The pull chain on the light kit fitter (E) has four positions to control ***fan*** speed. One pull is HIGH, two is MEDIUM, three is LOW and four turns the fan OFF.

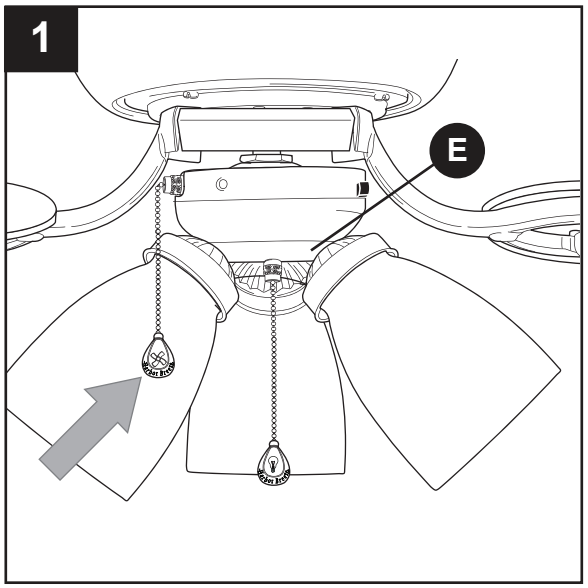

2. The pull chain in the center is used to turn the ***lights*** ON or OFF.

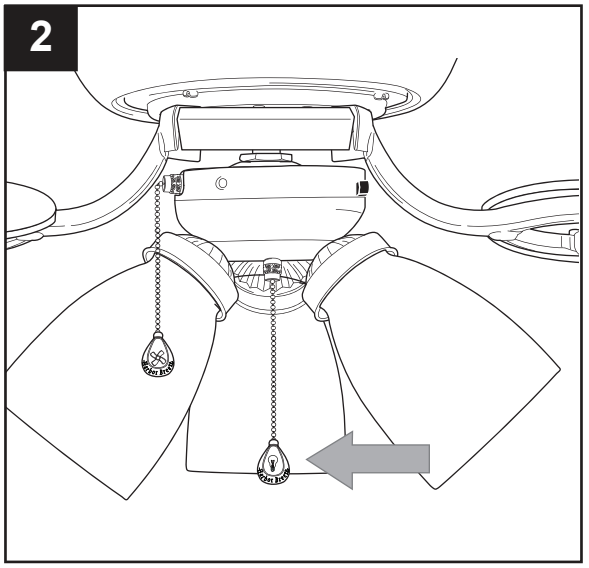

OPERATION INSTRUCTIONS

3. Use the fan reverse switch, located on light kit fitter (E), to optimize your fan for seasonal performance. A ceiling fan will allow you to raise your thermostat setting in summer and lower your thermostat setting in winter without feeling a difference in your comfort.

   ⚠ **CAUTION:** Wait for fan to stop before moving the reverse switch.

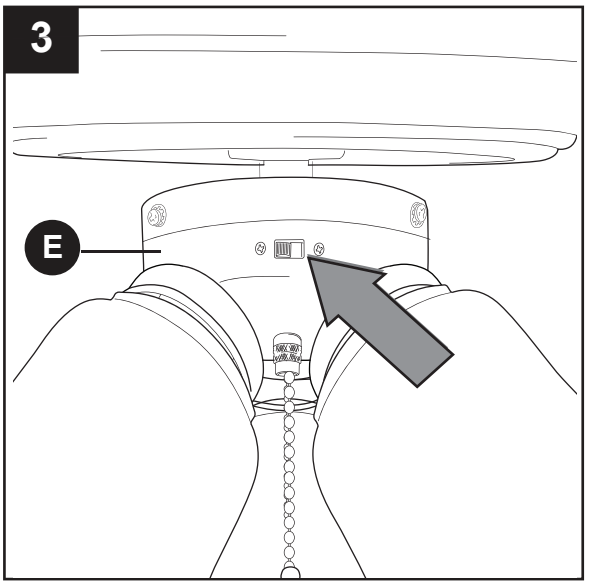

3a. In **warmer** weather, setting the reverse switch in the LEFT position will result in downward airflow creating a wind chill effect.

3b. In **cooler** weather, setting the reverse switch in the RIGHT position will result in upward airflow that can help move stagnant, hot air off the ceiling area.

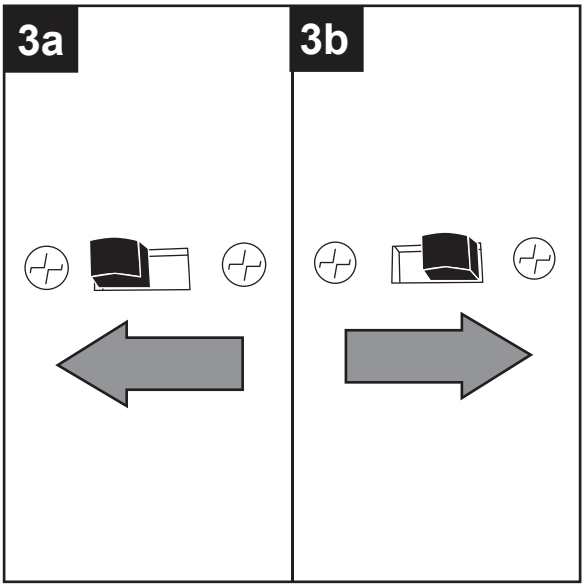

3c. **IMPORTANT**: Reverse switch must be set either ***completely*** LEFT or ***completely*** RIGHT for fan to function. If the reverse switch is set in the middle position, fan will not operate.

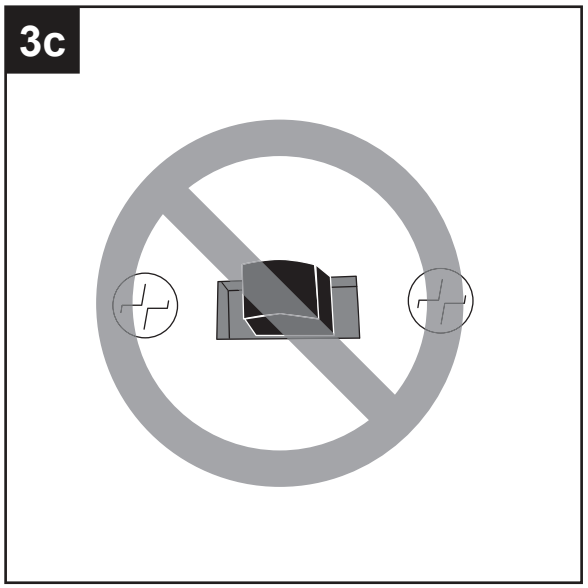

CARE AND MAINTENANCE

At least twice each year, lower motor housing to check motor assembly, and then tighten all screws on fan. Clean motor housing with only a soft brush or lint-free cloth to avoid scratching the finish. Clean blades with a lint-free cloth. You may occasionally apply a light coat of furniture polish to wood blades for added protection.

IMPORTANT: Shut off main power supply before beginning any maintenance. Do not use water or a damp cloth to clean the ceiling fan.

TROUBLESHOOTING

⚠ **WARNING**: Before beginning work, shut off the power supply to avoid electrical shock.

PROBLEM	POSSIBLE CAUSE	CORRECTIVE ACTION
Fan does not move.	1. Reverse switch not engaged. 2. Power is off or fuse is blown. 3. Faulty wire connection.	1. Push switch firmly either to the right or to the left. 2. Turn power on or check fuse. 3. Turn power off. Loosen motor housing and check all connections.
Noisy operation.	1. Blades are loose. 2. Cracked blade. 3. Full range dimmer switch. 4. Fan is new. 5. Motor housing is loose.	1. Tighten all blade screws. 2. Replace blade. 3. Replace with an approved speed control device. 4. Allow fan a “break in” period of a few days, especially when running the fan at Medium and High speeds. 5. Turn power off. Carefully loosen motor housing and verify that mounting bracket is secure according to instructions on page 11.
Excessive wobbling.	1. Blades are loose. 2. Blade arms incorrectly attached. 3. Unbalanced blades. 4. Fan not securely mounted.	1. Tighten all blade screws. 2. Re-install blade arms. 3. Switch one blade with a blade from the opposite side. 4. Turn power off. Carefully loosen motor housing and verify that mounting bracket is secure.
Fan operates but lights fail (if applicable).	1. Bulb(s) not installed correctly. 2. Wires in outlet box not wired properly. 3. Wall switch to fan is off. 4. Wires not connected properly.	1. Re-install bulb(s). 2. Check wires in outlet box, and if necessary, re-wire according to instructions on pages 9 and 10. 3. Make sure that wall switch to fan is on. 4. Check that molex connections in light kit fitter are connected properly according to instructions on page 12.

NOTE: A small amount of "wobble" is normal and should not be considered a defect.

WARRANTY

Set forth below, the manufacture warrants the fan motor for this ceiling fan to be free from defects in workmanship and material for the life of the product. Also, subject to the limitations below, the manufacturer warrants all ceiling fan parts (“ceiling fan parts” excludes the motor and parts made in whole or in part with glass) to be free from defects in workmanship and material for a period of one year after the date of purchase by the original purchaser at retail.

All claims must be made by the original purchaser, whether such purchaser purchased the product through a store or contractor. Ceiling fan part defects must be reported within the first year from the date of purchase. Parts made in whole or in part with glass and the finishes of metal and other surfaces are not warranted.

Purchasers are responsible for all costs of removing and reinstalling the product. Any damage to any part caused by ordinary wear and tear, accident, misuse, or improper installation, is not covered by this warranty. The manufacturer assumes no responsibility whatsoever for fan installation. Any service performed by a non-licensed electrician will render the warranty invalid.

The manufacturer’s sole responsibility shall be to repair or replace the motor, parts, or product within the terms stated above. The manufacturer shall not be liable for any loss or damage of any kind, including any incidental or consequential damages resulting directly or indirectly, from any breach of warranty, express or implied, or any other failure of this product. Some states do not allow the exclusion or limitation of incidental or consequential damages so this limitation may not apply to you. If the original purchaser ceases to own the fan, this warranty is voided.

Should the purchaser encounter a problem with your fan related to defects in workmanship or materials within the warranty period associated with the defective part, the manufacturer agrees to replace the defective part without charge, or at its option, to replace the ceiling fan with a comparable or superior model.

The manufacturer’s warranties are limited to the written warranties set out in this ceiling fan limited lifetime warranty. All other express and implied warranties, including, without limitation, the implied warranty of fitness for a particular purpose and the implied warranty of merchantability are disclaimed. Some states do not allow the disclaimer of implied warranties, so this disclaimer may not apply to you.

REPLACEMENT PARTS LIST

All parts are replaceable (see parts list in “Package Contents” on Page 5), however, only the parts listed below are under warranty. For replacement parts, call our customer service department at **800-527-1292**, 8:30 a.m. - 5 p.m., CST, Monday - Friday.

PART	DESCRIPTION	PART#
B	Mounting Bracket	7848950-B
E	Light Kit Fitter	7848950-E
G	Blade Arm	7848950-G
H	Blade	7848950-H
L	Socket Ring	7848950-L

