AquaSource®

AquaSource® is a registered trademark
of LF, LLC. All Rights Reserved.

ITEM #0065010
0064188

BATHROOM FAUCET

MODEL #67508-6001
67508-6027H2

Francias / Español p. 9

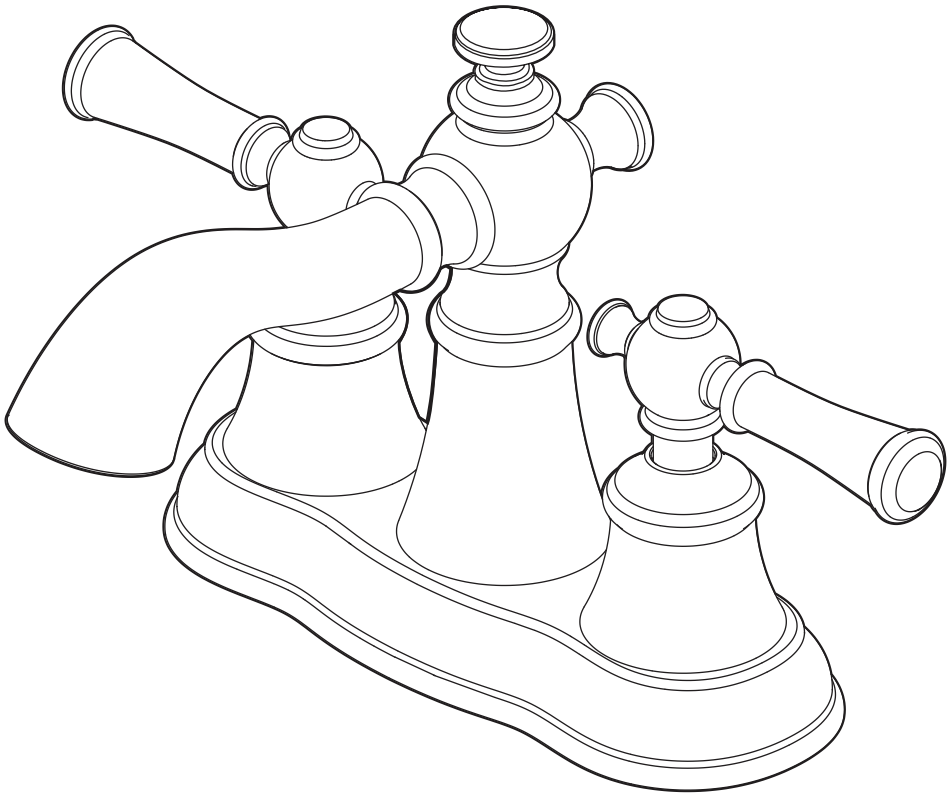

ATTACH YOUR RECEIPT HERE

Serial Number _____ Purchase Date _____

Questions, problems, missing parts? Before returning to your retailer, call our customer service department at 1-866-417-7564, 8 a.m. - 8 p.m., EST, Monday - Friday.

AB12294

Lowes.com AquaSource®

PACKAGE CONTENTS

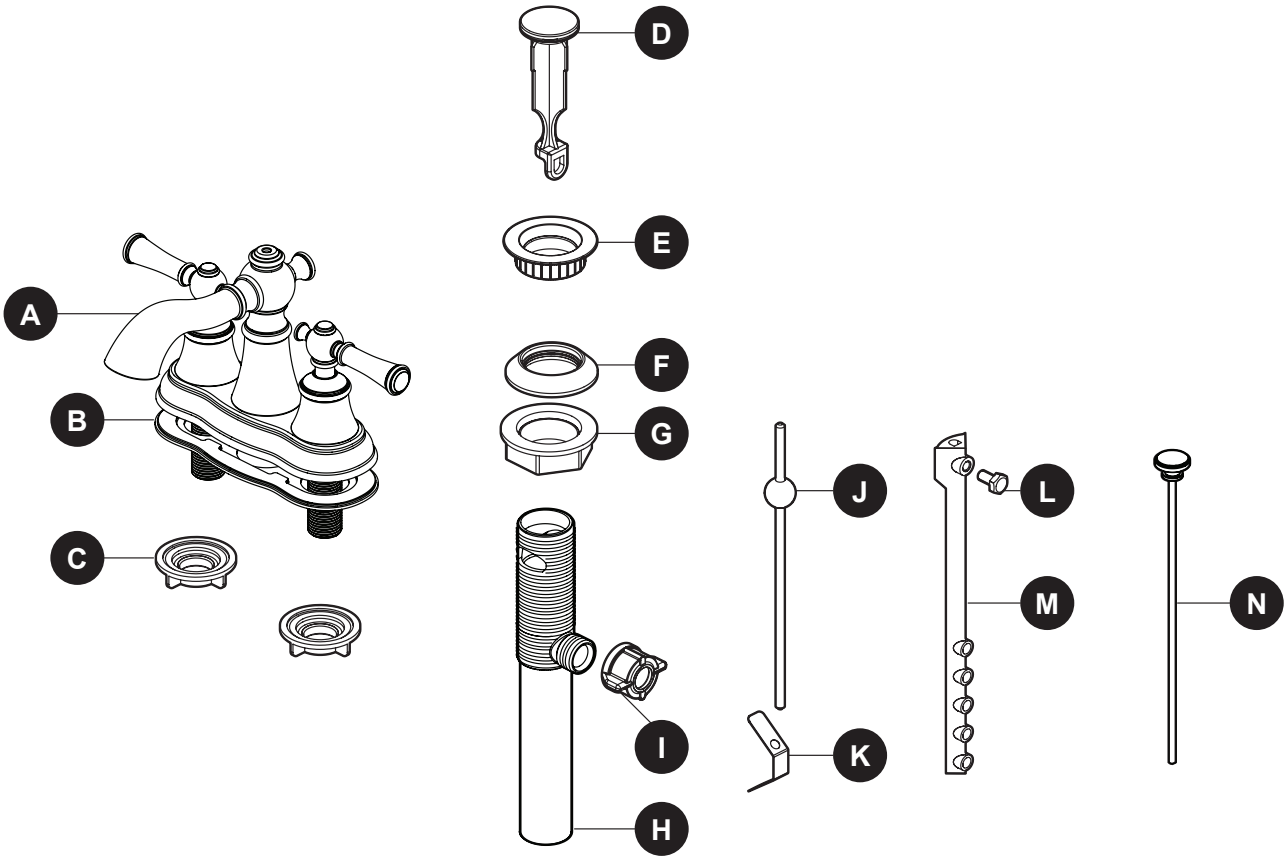

PART	DESCRIPTION	QUANTITY
A	Faucet	1
B	Base Plate (Preassembled to Faucet (A))	1
C	Mounting Nut (Preassembled to Faucet (A))	2
D	Stopper (Preassembled to Pop-up Body (H))	1
E	Flange (Preassembled to Pop-up Body (H))	1
F	Gasket (Preassembled to Pop-up Body (H))	1
G	Nut (Preassembled to Pop-up Body (H))	1
H	Pop-up Body	1
I	Pivot Nut (Preassembled to Pop-up Body (H))	1
J	Horizontal Rod (Preassembled to Lift Rod Strap (M))	1
K	Clip (Preassembled to Lift Rod Strap (M))	1
L	Screw (Preassembled to Lift Rod Strap (M))	1
M	Lift Rod Strap	1
N	Lift Rod	1

HARDWARE CONTENTS (not shown to actual size)

AA

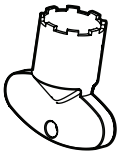

Aerator Tool
x1

SAFETY INFORMATION

Please read and understand this entire manual before attempting to assemble, operate, or install the product.

WARNING:

- Follow the installation instructions carefully. Proper installation is the installer's responsibility.
- Failure to follow correct installation procedures can result in the faucet being loose, which can result in serious injury.

CAUTION:

- Check local building codes before beginning installation to ensure compliance.

PREPARATION

Before beginning the assembly of this product, make sure all parts are present. Compare parts with the package contents and hardware contents list. If any part is missing or damaged, do not attempt to assemble the product.

Estimated Assembly Time: 60 minutes (including removal of old faucet)

Tools Required for Assembly (not included): Adjustable Wrench, Silicone Sealant, Allen Wrench

Helpful Tools (not included): Basin Wrench, Water Supply Lines

ASSEMBLY INSTRUCTIONS

1. Shut off the water supply and remove the old faucet.

Note: Each valve stop should be turned clockwise.

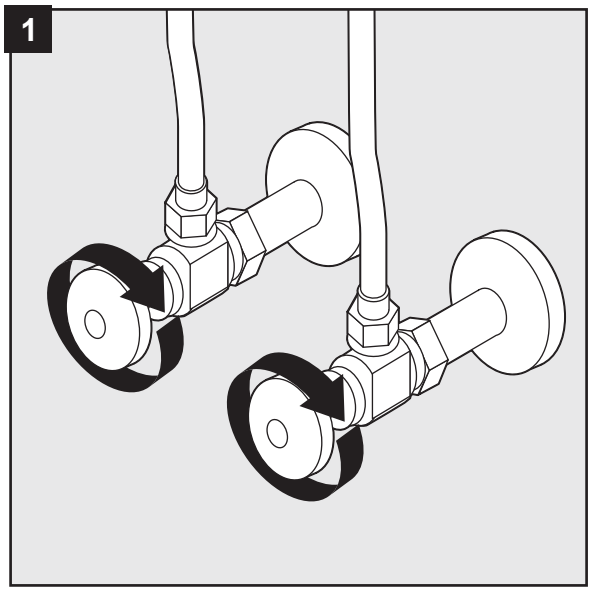

2. Install the faucet:

a. Remove the preassembled mounting nuts (C) from the faucet (A) and place the base plate (B) and the faucet (A) in position on the sink.

Note: If the sink surface is uneven, use silicone sealant (not included) to create a watertight seal.

b. From under the sink, thread the mounting nuts (C) onto the faucet (A).

c. Tighten the mounting nuts (C).

Note: Tighten mounting nuts until snug. Do not overtighten.

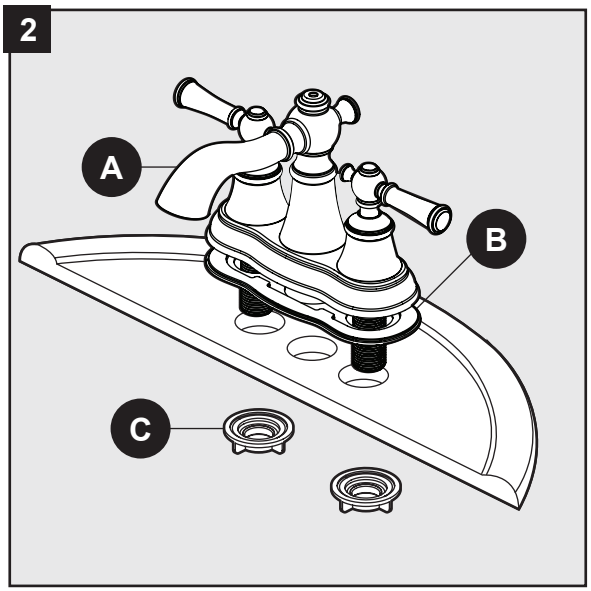

3. Connect a 1/2 in. IPS faucet connector or coupling nuts (not included) with 3/8 in. O.D. ball-nose risers (not included) to the water supplies underneath the sink using wrenches (not included).

Note: Refer to the local plumbing codes for permissible types of water supply connectors.

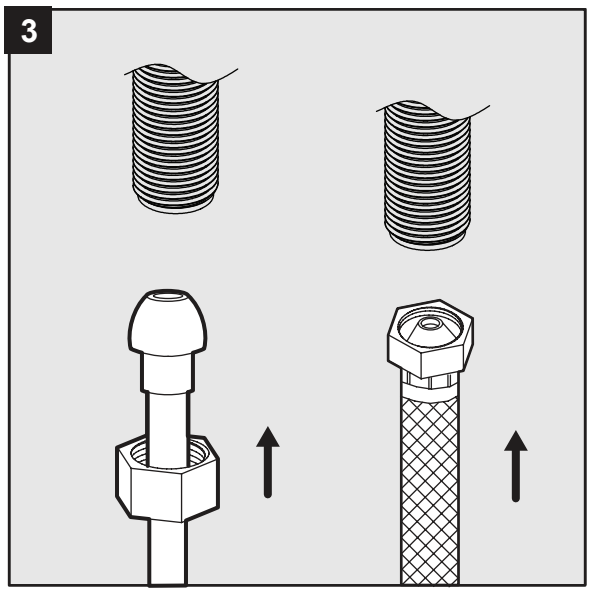

ASSEMBLY INSTRUCTIONS

4. Remove the stopper (D) and the flange (E) from the pop-up body (H). Screw the nut (G) all the way down onto the pop-up body (H) and then push the gasket (F) down.

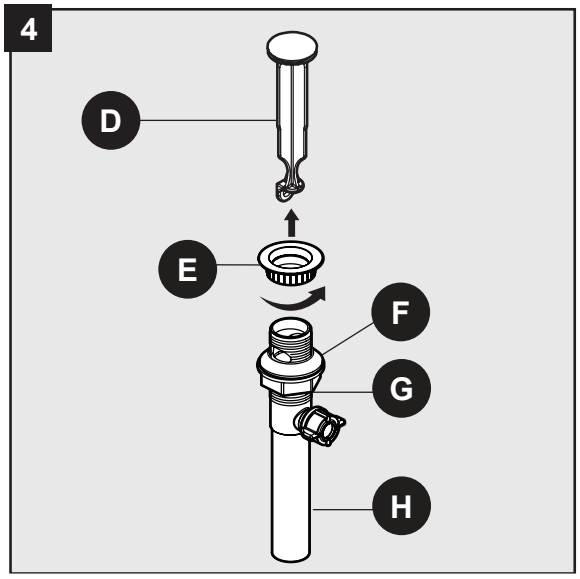

5. Apply silicone sealant (not included) to the underside of the flange (E).

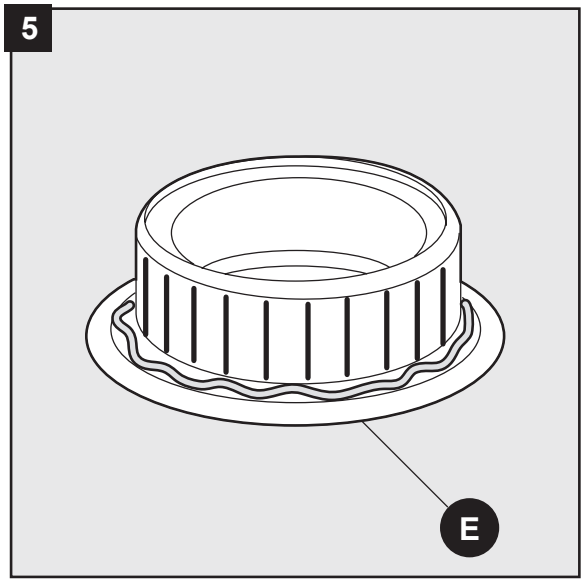

6. Insert the pop-up body (H) into the sink and screw the flange (E) onto the pop-up body (H). Ensure the pivot hole is facing the back of the sink. Tighten the nut (G) and remove the pivot nut (I).

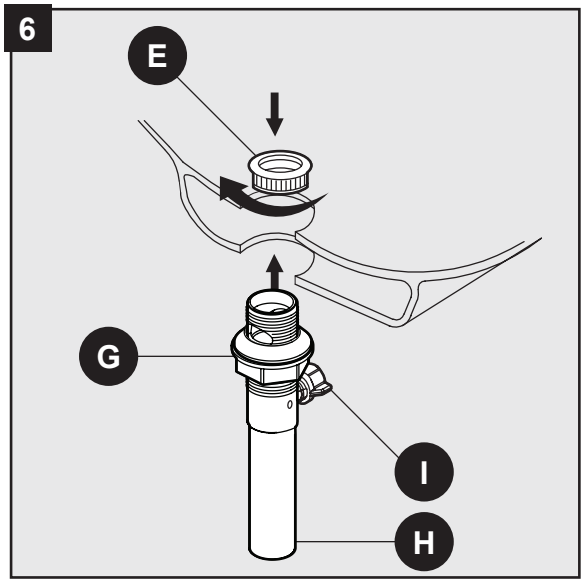

7. Insert the stopper (D) onto the sink. Remove the preassembled horizontal rod (J) and clip (K) from the lift rod strap (M). Install the horizontal rod (J) into the pop-up body (H) and through the hole of the stopper (D). Install the pivot nut (I) onto the horizontal rod (J) and hand-tighten it back onto the pop-up body (H).

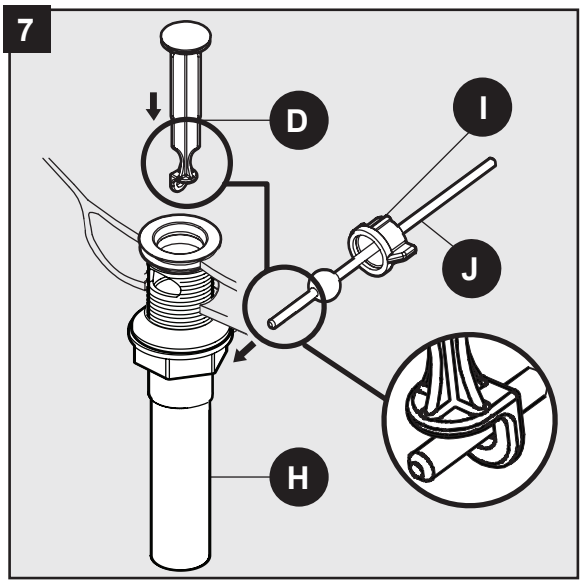

8. Re-attach the lift rod strap (M) to the horizontal rod (J) using the clip (K).

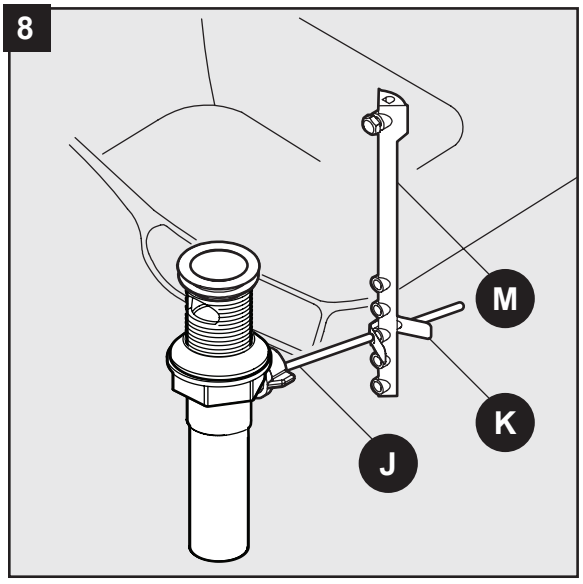

9. Insert the lift rod (N) through the faucet (A) and into the lift rod strap (M). Tighten the screw (L) on the lift rod strap (M).

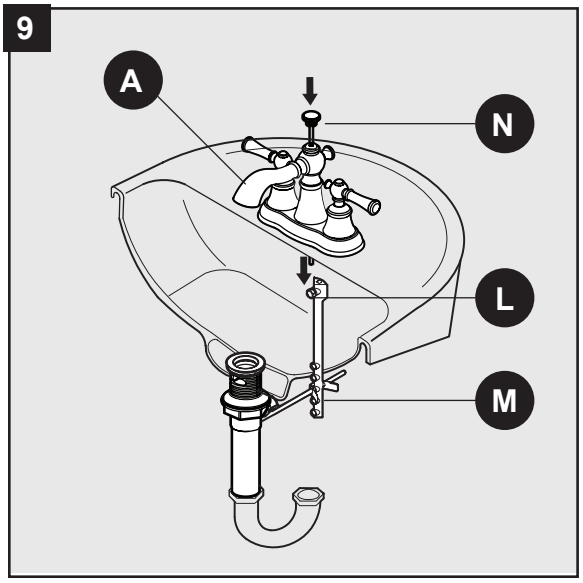

OPERATING INSTRUCTIONS

1. After the installation is complete:

a. Remove the aerator on the faucet (A) with the aerator tool (AA) provided.

b. Turn on the water supply and allow both hot and cold water to run for at least one minute each.

c. While the water is running, check for leaks.

d. Replace the aerator.

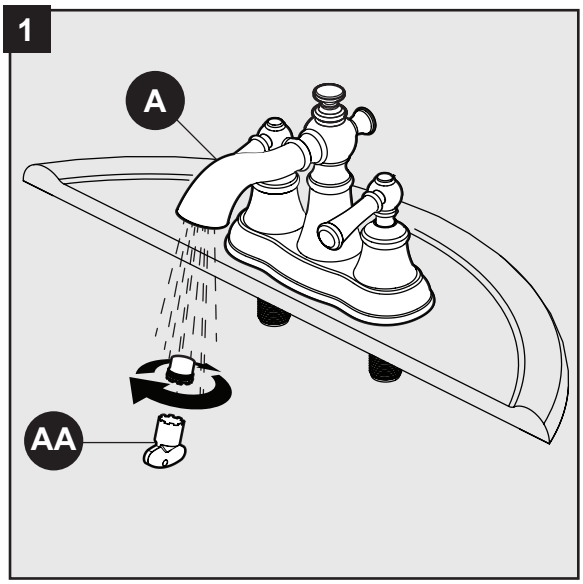

CARE AND MAINTENANCE

- Clean carefully by gently wiping with a grit-free damp cloth.
- Use only mild soap with water.
- Never use acids, harsh chemicals, or abrasive detergents to clean the surface.

TROUBLESHOOTING

PROBLEM	POSSIBLE CAUSE	CORRECTIVE ACTION
There is a leak from under the handle.	The cartridge is damaged.	Remove the handle and replace the cartridge.
There is an inconsistent water-flow pattern.	The aerator is dirty or does not fit correctly on the faucet.	Unscrew the aerator to check the rubber washer or replace the aerator.
The spout/aerator has a leak.	The cartridge is damaged.	Remove the handle and replace the cartridge.

WARRANTY

This faucet has been manufactured under the highest standard of workmanship. All parts of this faucet are warranted to be free from leaks or drips during domestic use for as long as the original purchaser owns this product. THIS EXCLUDES INDUSTRIAL, COMMERCIAL, OR BUSINESS USE. The manufacturer will replace FREE OF CHARGE, under the warranty conditions the entire unit or any part (at our option) which proves defective in material and/or workmanship under normal installation, use, and service. This warranty is limited to defective parts as stated. All costs of removal and installation of the faucet, including the replacement of warranty parts are the responsibility of the purchaser. The manufacturer shall not be liable for incidental, consequential, or special damages arising at or in connection with product use or performance except as may otherwise be accorded by law. This warranty gives you specific legal rights, and you may also have other rights which may vary from state to state. Any damage to this faucet as a result of misuse, abuse, neglect, accident, improper installation, or any use violating instructions furnished by us, WILL VOID THIS WARRANTY. When requesting warranty service, you will need to present a copy of your sales receipt as proof of purchase. To obtain warranty service, call our customer service department at 1-866-417-7564.

REPLACEMENT PARTS LIST

For replacement parts, call our customer service department at 1-866-417-7564, 8 a.m. - 8 p.m., EST, Monday - Friday.

PART	DESCRIPTION	PART #
1	Index	RP10072*
2	Screw	RP50154
3	Handle	RP13275*
4	Washer	RP70150
5	Handle Seat	RP17142*
6	Bonnet	RP70397
7	Washer	RP64001
8	Cartridge H	RP20013
9	Cartridge C	RP20014
10	Aerator	RP30092
11	Aerator Tool	RP30093
12	Mounting Nut	RP56084
13	Lift Rod	RP40177*
14	Pop-up	RP40027*

* Available in Chrome Finish and Oil Rubbed Bronze Finish.

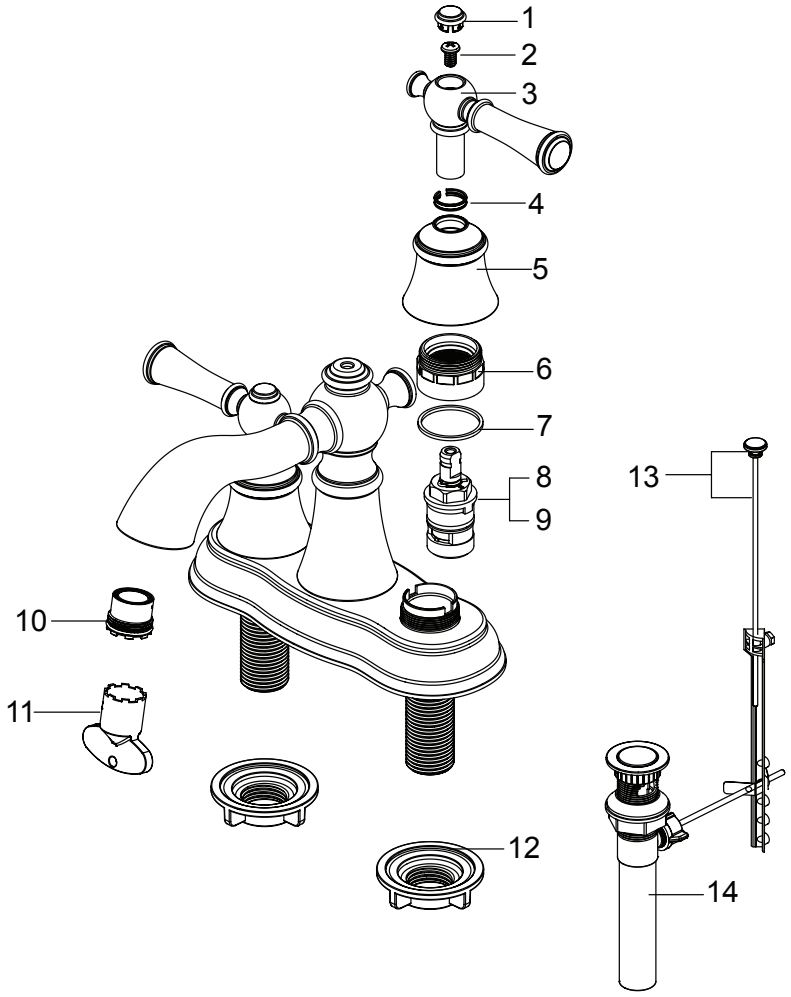

Printed in China

Aquasource® is a registered trademark of LF, LLC. All rights reserved.

Lowes.com AquaSource®