KOHLER®

Purist® | K-TLS14422-3

Rite-Temp® shower trim kit with cross handle, without showerhead

Features

- Includes faceplate with handle, shower arm and flange
- A single handle controls both on/off activation and temperature setting
- Cross handle
- For use with any KOHLER showerhead (sold separately)
- Complements Purist faucets and accessories



Available Colors/Finishes

Color tiles intended for reference only.

	CP	Polished Chrome
	SN	Vibrant Polished Nickel
	AF	Vibrant French Gold
	BN	Vibrant Brushed Nickel
	BV	Vibrant Brushed Bronze
	BL	Matte Black
	2MB	Vibrant Brushed Moderne Brass
	TT	Vibrant Titanium
	BGP	Vibrant Brushed Graphite

1-800-4KOHLER (1-800-456-4537)
Kohler Co. reserves the right to make revisions without notice to product specifications.
For the most current specification sheet, go to www.kohler.com USA or www.kohler.ca Canada.
6-18-2026 17:1 - US-CA

THE BOLD LOOK OF KOHLER®

Codes/Standards

ADA compliant when installed to the specific requirements of these regulations.

ADA

ASME A112.18.1/CSA B125.1
ADA

Technical Information

All product dimensions are nominal.

Handle

Handle Style/ Type:	Cross

Valves

Required Valve:	Pressure Balance

Material

- Premium material construction with metal handle ensures reliability and durability
- KOHLER finishes resist corrosion and tarnishing

Recommended Products/Accessories

K-23723 Faucet cleaner

Required Products/Accessories

- K-8304 Series Rite-Temp® Valve & Cartridge Kits

or

- K-8300 Series Rite-Temp® Valve Body Rough-ins
- K-8305 Series Rite-Temp® Cartridges

or

- K-8300 Series Rite-Temp® Valve Body Rough-ins (QTY 2)
- K-8305 Series Rite-Temp® Cartridges

Warranty

See website for detailed warranty information.

KOHLER® Faucet Lifetime Limited Warranty

1-800-4KOHLER (1-800-456-4537)
Kohler Co. reserves the right to make revisions without notice to product specifications.
For the most current specification sheet, go to www.kohler.com USA or www.kohler.ca Canada.
6-18-2026 17:1 - US-CA

THE BOLD LOOK OF KOHLER.

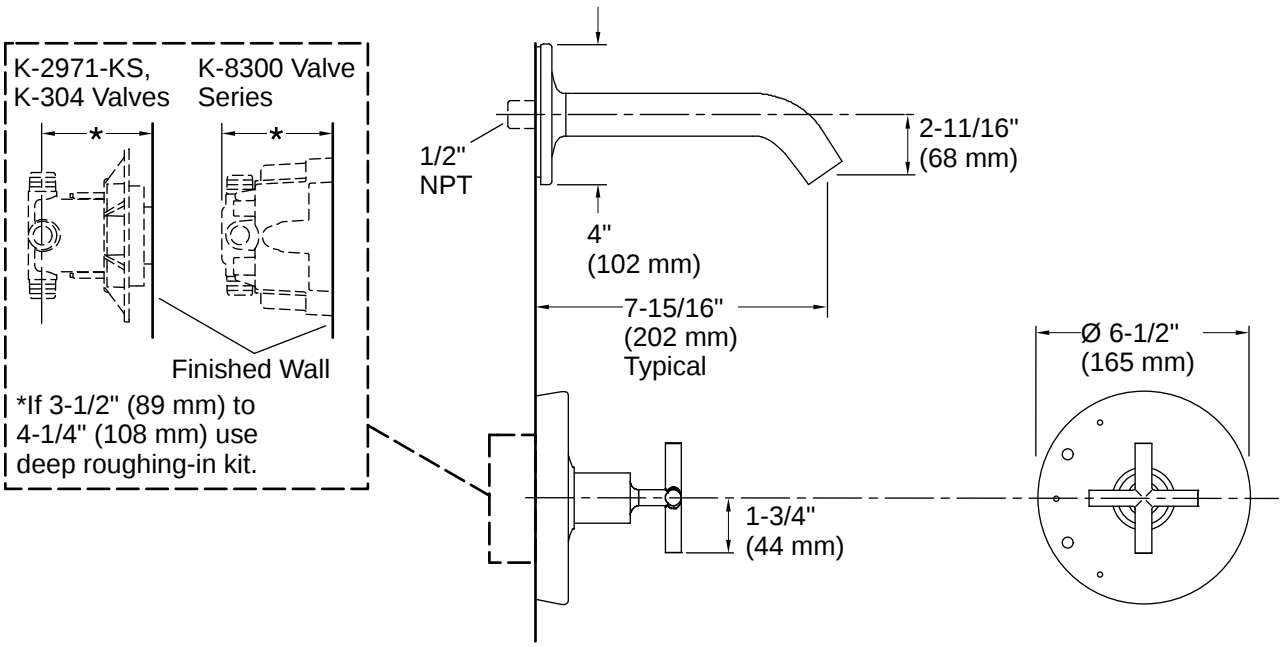

Installation

- Trim only; requires valve to complete installation (sold separately)

Installation Notes

Install this product according to the installation instructions.

Install the product according to the installation guide.
NOTICE: Risk of product damage. Long screws for installing trim can damage the K-2971-KS valve. Consult the trim installation guide to verify if the thin wall installation kit (88526) is needed.
ADA compliant when installed to the specific requirements of these regulations.

1-800-4KOHLER (1-800-456-4537)
Kohler Co. reserves the right to make revisions without notice to product specifications.
For the most current specification sheet, go to www.kohler.com USA or www.kohler.ca Canada.
6-18-2026 17:1 - US-CA

THE BOLD LOOK OF KOHLER.